ไทย / ENG V2017

SUN RISE
technologies

ชิ้นส่วนแม่พิมพ์ปั๊ม
DIE COMPONENTS
STANDARD & CUSTOMIZABLE

OF "OIL FREE™ standard for die large and small"

Guide and Bush	ไกด์ และ บุช
Guide Post Sets	ไกด์โพสเซ็ต
Die Sets	ไดเซ็ต
Punches	พั้นช์
Pilot Punches	ไพล็อตพั้นช์
Punch Guide Bushes	ไกด์บุชสำหรับพั้นช์
Button Dies	บัททอนดาย
Retainers	รีเทนเนอร์สำหรับพั้นช์
Stripper Guide Bushes	สตริปเปอร์ไกด์และบุช
Locating Components	ชิ้นส่วนหาตำแหน่ง
Die Transfer Systems	ระบบเคลื่อนย้ายแม่พิมพ์
Accessories	ชิ้นส่วนทั่วไป
Cam Slides	แคมสไลด์
Slide Plates	สไลด์เพลท
Die Springs	สปริงแม่พิมพ์
Urethane Springs	ยูรีเทนสปริง
Gas Springs	แก๊สสปริง



LINE @SUNRISEGROUP

www.sunrisegr.com


SUN RISE
technologies

สารบัญ - TABLE OF CONTENT



ไกด์ และ บุช / GUIDES & BUSHES Page 1-20



ไกด์โพสเซ็ต / GUIDE POST SETS Page 21-28



ไดเซ็ต / DIE SETS Page 29-42



พั้นช์ / PUNCHES Page 43-58



ไพลอตพั้นช์ / PILOT PUNCHES Page 59-74



ไกด์บุชสำหรับพั้นช์ / PUNCH GUIDE BUSHES Page 75-80

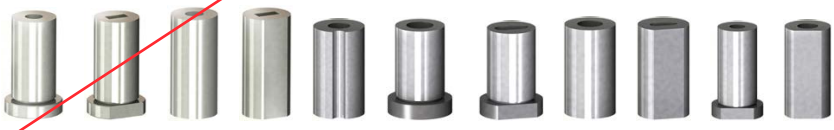

บัทท้อนดาย / BUTTON DIES Page 81-88

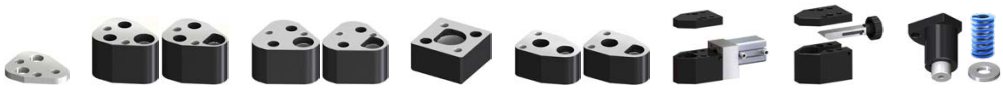

รีเทนเนอร์ / PUNCH DIE RETAINERS Page 89-104

ยกเลิก
Discontinued

แคตตาล็อคชิ้นส่วนแม่พิมพ์ปั้ม



สตริปเปอร์ไกด์ และ บุช / STRIPPER GUIDES AND BUSHES Page 105-112



ชิ้นส่วนหาตำแหน่ง / DIE LOCATING COMPONENTS Page 113-150



ระบบเคลื่อนย้ายแม่พิมพ์ / DIE TRANSFER SYSTEM Page 151-204



ชิ้นส่วนทั่วไป / DIE ACCESSORIES Page 205-224



สไลด์เพลท / SLIDE PLATES Page 225-236



ชิ้นส่วนแคมสไลด์ / CAM SLIDES Page 237-270



สปริงแม่พิมพ์ / DIE SPRINGS Page 271-316



ยูรีเทนสปริง / URETHANE SPRINGS Page 317-320



แก๊สสปริง / GAS SPRINGS Page 321-376

SUN RISE technologies
Tel: +662-324-3184-(89) Fax: +662-324-3190 / +662-324-3103
Website: www.sunrisegr.com Email: sale@sunrisegr.com

การใช้งานแคตตาล็อค – USING THE CATALOG

สัญลักษณ์ และ ความหมาย – Symbol indicators

ข้อมูลน่าสนใจ
Interesting Information

ข้อควรระวัง
Warning Information

ข้อมูลวัสดุ
Material Information

การสอบถามสินค้า และ สั่งซื้อ – Making Inquiry and Ordering

1) ทำการสอบถามสินค้าด้วย Order Code ในตาราง หรือผสมโค้ดตามตาราง Order Example เพื่อความรวดเร็วในการค้นหาข้อมูลสินค้าในระบบ และจัดทำใบเสนอราคา
Use Order Code in the table or combine the code from Order Example table when making inquiry for faster quotation.

ORDER EXAMPLE	Model	W	-	L
	25SGW100-180			

ตัวอย่าง Order Code แบบผสม สินค้าส่วนมากมีขนาดหลากหลายจึงต้องมีการผสม code ซึ่งสามารถดูวิธีผสมได้จากช่อง “Order Example” และนำตัวอักษรมาเรียงตามตัวอย่าง

Example of Combination Order Code. Most products have many combinations, the code needs to be combined to form the Order Code. Look for “Order Example” box on each product page. Plug in each code as example shown.

2) ส่วนลดจะปรับตามจำนวนที่สั่งซื้อจริง จึงควรระบุจำนวนที่ต้องการเมื่อทำการขอราคา
Discounts are based on order quantity.
Please state the actual quantity upon making inquiry.

3) ช่องทางติดต่อเพื่อ ขอราคาและสั่งซื้อ
Contact channels for sending Inquiries and Purchase Orders

ประเทศไทย
Thailand

Email	sale@sunrisegr.com
Telephone	02–324–3184/ 08–4438–7746(–49)
Fax	02–324–3190 / 02–324–3103
LINE@	@sunrisegroup

ต่างประเทศ
International

Email	export@sunrisegr.com

การสั่งผลิตตามแบบ – Customization Service

- สินค้าในแคตตาล็อคนี้ท่านสามารถสั่งผลิตตามแบบได้ โปรดแจ้งความประสงค์ผ่านทางฝ่ายขายเรา โดยปกติงานตามแบบจะไม่มีขั้นต่ำในการผลิต
Products in this catalog can be customize to your design. Please contact our sale personals for more details.

นโยบายการให้บริการ – Service Policies

- สินค้าทุกชิ้นซันไรส์รับประกันคุณภาพการใช้งานตามที่ระบุ
Sun Rise guaranteed all of our products meet the declared quality.
- สินค้าทุกชิ้นรับประกันขั้นต่ำ 6 เดือน พบสินค้าเสียหาย* เรายินดีเปลี่ยนหรือแก้ไขสินค้าให้ทันที
Every item is under at least 6 months warranty; In case of faulty products* contact us to make claim
- รูปภาพและสีของสินค้าในแคตตาล็อคอาจจะไม่ตรงกับสินค้าจริง อาจมีการเปลี่ยนแปลงพัฒนาได้โดยไม่ต้องแจ้ง
Product pictures and colors within the catalog may not reflect the actual product.
- ในบางกรณีที่เราไม่สามารถจัดส่งสินค้าด้วยรถจัดส่งให้ได้ จะมีค่าจัดส่งเพิ่มเติมแล้วแต่กรณี
In case we can not send your order by our trucks; an extra delivery cost may occur.

**ความเสียหายต้องไม่เกิดจากการใช้งาน อุบัติเหตุ ภัยธรรมชาติ หรือจากการนำไปใช้งานผิดประเภท*
Must not be the damage done by usage, accidents, nature disasters, or wrongly operated.

ไกด์ และ บุช
GUIDE & BUSHES

					
Name	Guide Post	Guide Bush	Guide Post for Press Fit	Guide Post for Press Fit	Guide Bush
Model	25GPME	25GBMF	25GP	25SGPOB / 25SGPSB	25SGBF / 25SGBW
Page	3	3	4	4	5

				
Name	Flange Guide Bush	Flange Guide Bush	Stroke End Block / Guide Bush Locking Block Distant Guide Ring	Ball Guide Post (for Die)
Model	25SGFW	25HBF	25SGEB / 25SDSEB / 25SKEB / 25SHKD	25PKSL / 25PKSLU
Page	5	6	6 - 7	8

					
Name	Ball Guide Post (for Pad)	Oil Free(TM) Bush	Oil Free(TM) Washer	Oil Free(TM) Flange Bush	Oil Free(TM) Guide Bar
Model	25PKS / 25PKSU	25SBW	25WSBW	25FSBW	25SWGB-W / 25SWGB-I / 25SWGB-S
Page	8	9 - 10	11	12	13

				
Name	Oil Free(TM) Guide Bar	Oil Free(TM) Guide Bar	Guide Bar X-Oil Groove	
Model	25SGPF / 25SGPZ	25SWGZ / 25SWGAZ / 25SWGBZ	25SGW / 25SGWA / 25SGWB	
Page	14 / 15	16	17	

				
Name	Guide Bar O-Oil Groove	Pad Keepers	Pad Guide Block / Pad Keeprs	
Model	25SGO / 25SGOA / 25SGOB	25SKPN / 25SKPNZ	25SPWN / 25SKPNP	
Page	18	19	20	

SUN RISE technologies
Tel: +662-030-0092 Fax: +662-324-3190 / +662-324-3103
Website: www.sunrisegr.com Email: sale@sunrisegr.com

ตารางการเลือกไกด์และบุช | Guide & Bush Selecting Chart

Guide Diameter	Guide			Bush
D32 - 80	P.3	25GPME		 Guide Bush 25GBMF P.3
D30 - 120	P.4	25GP		 Guide Bush 25SGBF P.5  Guide Bush 25SGBW P.5  Flange Guide Bush 25SGFW P.5  Flange Guide Bush 25HBF P.6
D80 - 120	P.4	25SGPOB		






แบบเม็ดกลม - Plug Type




แบบแถบ - Strip Type

ออยฟรี OF OIL FREE™

เป็นประเภทของเพลนแบริ่งแบบไม่มีลูกปืน ออยฟรี™ นั้นได้ถูกพัฒนาขึ้นมาให้สามารถใช้ได้ดียิ่งขึ้นโดยไม่ต้องใช้น้ำมัน หรือใช้น้อยลง ช่วยให้ยืดอายุการใช้งานและลดเวลาการดูแลรักษาชิ้นส่วนให้น้อยลง เพราะชิ้นส่วนสไลด์ทั่วไปเมื่อน้ำมันแห้งก็จะเกิดความร้อนสูงทำให้เสียหายได้ง่าย จึงต้องมีการเติมน้ำมันอยู่เรื่อยๆ อีกทั้งการออกแบบก็เป็นไปได้ยากเพราะต้องออกแบบให้สามารถเติมน้ำมันได้ง่าย

รูปแบบของออยฟรีนั้นมีทั้งแบบเม็ดกลม และแบบแถบ ทั้งนี้ขึ้นอยู่กับการออกแบบซึ่งสามารถเลือกสั่งทำพิเศษได้

An improved plain bearing that can work without or with little oil and grease. By using Oil Free™ products the parts will have increased tool life and reduced maintenance time. Normal oil-groove bearing will have time when grease dry out and damaging the part from overheating. Also it will need constant applying of grease to work.

Oil Free™ come in Plug Type or Strip Type depending on design. We welcome customization on Oil Free™ products.

ไกด์ และ บุช

Guide Post - ไกด์โพส

Model: 25GPME

OIL FREE™



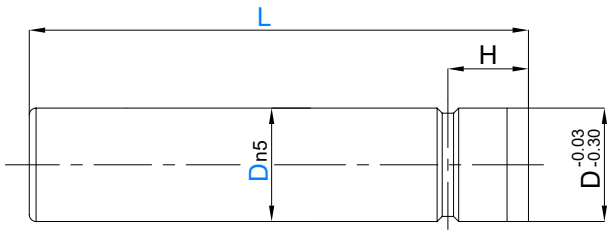

ORDER EXAMPLE: Model D - L → 25GPME32-200

ใช้ร่วมกับไกด์บุช 25GBMF
Use with 25GBMF Guide Bush

S45C
55HRC~(Induction Harden)

Model	Dn5		L 10 mm increment	H	M
25GPME	32	+0.028 +0.017	90 ~ 250	20	-
	38		110 ~ 300	25	
	50		160 ~ 350	32.5	
	60	+0.033 +0.020	180 ~ 400	37.5	
	80		250 ~ 450	50	M12

Guide Bush - ไกด์บุช

Model: 25GBMF

OIL FREE™



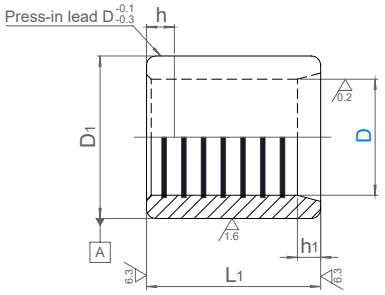

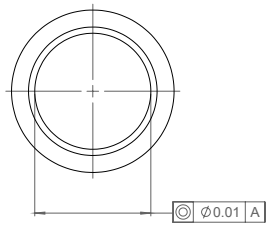

ORDER EXAMPLE: Model D → 25GBMF38

ใช้ร่วมกับไกด์โพส 25GPME
Use with 25GPME Guide Post

FC250
Oil Free™ Solid Lubricant

Model	D		D1		h	h1	L1
25GBMF	32	+0.047 +0.037	52	±0.0065	8	4	48
	38	+0.049 +0.037	60		10	5	55
	50	+0.052 +0.037	70		15	10	75
	60	+0.061 +0.043	80		20		90
	80	+0.063 +0.043	100	±0.0075	25		120

SUN RISE technologies
Tel: +662-030-0092 Fax: +662-324-3190 / +662-324-3103
Website: www.sunrisegr.com Email: sale@sunrisegr.com

Guide Post for Press Fit - ไกด์โพส สำหรับ สวมอัด

Model: 25GP

OF OIL FREE™



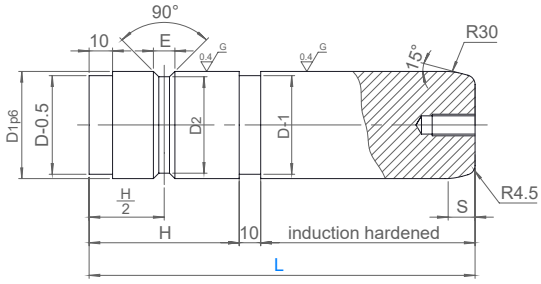

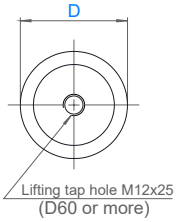

ORDER EXAMPLE: Model D - L → 25GP50-200

M S45C
55HRC-(Induction Harden)

Model	D		L												D1 p6		H	M
25GP	30	-0.005 -0.015	100	120	140	160	180								30	+0.035 +0.022	40	-
	40			120	140	160	180	200							40	+0.042 +0.026	50	
	50					160	180	200		250	300				50		70	
	60	-0.010 -0.020						200	220	250	300	350			60	+0.051 +0.032	90	M12
	80									250	300	350	400	450	80		120	
	100	-0.010 -0.025									300	350	400	450	500	100	+0.059 +0.037	150
	120												400	450	500	550	120		180	

Guide Post for Press Fit - ไกด์โพส สำหรับ สวมอัด

OF OIL FREE™

Guide Post
Model: 25SGPOB



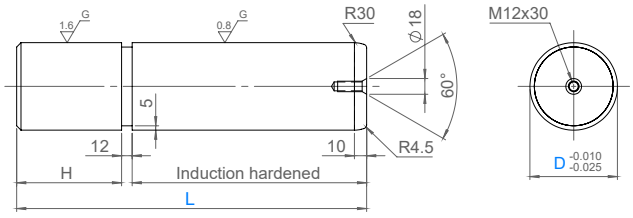

Stopper
Model: 25SGPSB



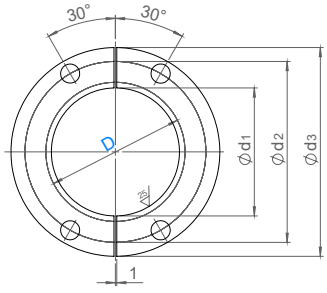

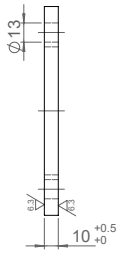

ORDER EXAMPLE: Model D - L → 25SGPOB80-350

M S45C
55HRC-(Induction Harden)

Model	D		L	H
25SGPOB	80	-0.010 -0.025	350	100
			400	
	100		350	120
			400	
			450	
	120		450	150
			500	

ORDER EXAMPLE: Model D → 25SGPSB100

M S45C

Model	D	d1	d2	d3
25SGPSB	80	72	110	130
	100	92	130	150
	120	112	156	177.8

ไกด์ และ บุช

Guide Bush - ไกด์บุช

Model: 25SGBF Model: 25SGBW

OIL FREE™





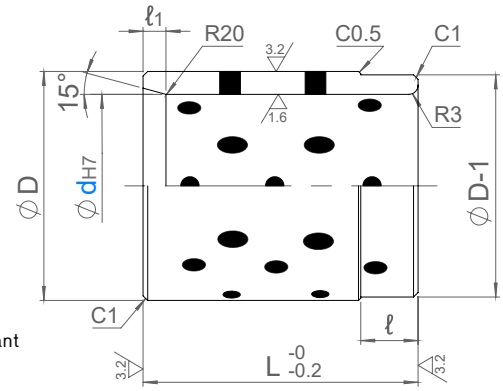

25SGBF (M) FC250 Oil Free™ Solid Lubricant

25SGBW (M) Copper Alloy Oil Free™ Solid Lubricant

ORDER EXAMPLE: Model d — 25SGBF50

Model	d H7		L	D		ℓ	ℓ1
25SGBF 25SGBW	25	+0.021 0	40	40	±0.008	10	5
	30		50	50			
	35	+0.025 0	55	60	±0.0095	15	
	40		60			10	
	50		75	70		15	10
	60	+0.030 0	90	80	±0.011	20	
	80		120	100		25	
	100	+0.035 0	150	120	±0.0125		
	120		180	140			

Flange Guide Bush - ไกด์บุชมีบ่า

Model: 25SGFW

OIL FREE™



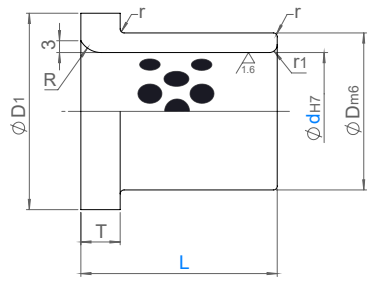

ORDER EXAMPLE: Model d - L — 25SGFW80-100

(M) Copper Alloy Oil Free™ Solid Lubricant

Model	d H7		L	D m6		D1	T	R	r	r1
25SGFW	25	+0.021 0	40	35	+0.025 +0.009	45	7	10	1	2
	30		50	40		50	10			
	40	+0.025 0	70	55	+0.030 +0.011	65		20	2	
	50		80	65		75				
	60	+0.030 0		75		85				
	65			80		90				
	80		100	100	+0.035 +0.013	110				
			140							
	100	+0.035 0	100	125		130				
			140							

SUN RISE technologies
Tel: +662-030-0092 Fax: +662-324-3190 / +662-324-3103
Website: www.sunrisegr.com Email: sale@sunrisegr.com

Flange Guide Bush - ไกด์บุชมีบ่า

Model: 25HBF

OF OIL FREE™



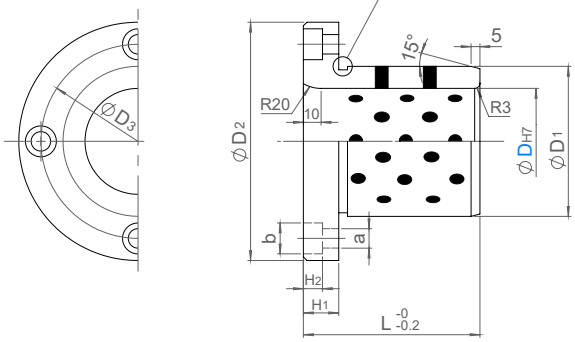

ORDER EXAMPLE: Model D — 25HBF50

Ⓜ FC250 Oil Free™ Solid Lubricant

ⓘ มีสกรูในชุด Mounting Bolts Included

Model	D H7		L	D1		D2	H1	D3	a	b	H2	Mounting Bolts
25HBF	30	+0.021 0	50	50	±0.008	90	20	70	11	17.5	10.8	24CB10x30 4pcs
	40	+0.025 0	65	60	±0.0095	100		80				
	50		80	75		125		100				
	60	+0.030 0	100	85	±0.011	135		110				
	80		130	110		170	25	140	14	20	13	24CB12x40 4pcs
	100	+0.035 0	160	130	±0.0125	190		160				

Stroke End Block - สโตรคเอ็นบล็อค สำหรับไกด์โพส

Model: 25SGEB / 25SDSEB

OF OIL FREE™



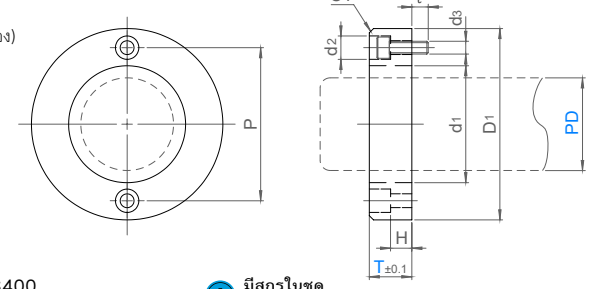

ORDER EXAMPLE: Model PD - T - Color — 25SGEB50-40-R

Ⓜ SS400 Black Oxide (Fe304)

ⓘ มีสกรูในชุด Mounting Bolts Included

Model	PD	T	Color	D1	P	d1	d2	d3	H	ℓ	Mounting Bolt
25SGEB	38	20, 25, 30	R (สีแดง/Red)	75	60	43	10	5.5	10	10	24CB5x20
	50	20, 25		90	72	55	11	6.5	10		24CB6x20
		30, 35, 40							20		24CB6x30
	60	20, 25	Y (สีเหลือง/Yellow)	120	92	65	14	9	8	12	24CB8x20
		30, 35, 40							18		24CB8x30
	80	20, 25	N (สีรมดำ/Blacken)	150	116	88			8		24CB8x20
		30, 35, 40							18		24CB8x30

Model	PD	T	Color	D1	P	d1	d2	d3	H	ℓ	Mounting Bolt
25SDSEB (Oversized)	50	15	R (สีแดง/Red)	120	100	54	14	9	5	15	24CB8x20
		20							10	10	
	60	15	Y (สีเหลือง/Yellow)	140	120	64			5	15	
		20							10	10	

ไกด์ และ บุช

Guide Bush Locking Block - ไกด์บุชล็อคบล็อค

Model: 25SKEB

OIL FREE™



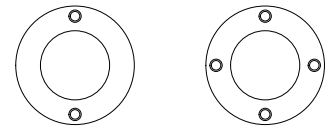

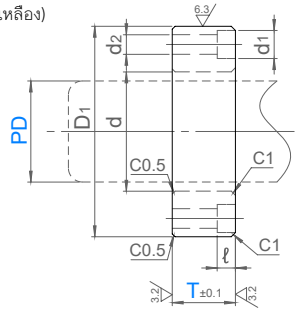

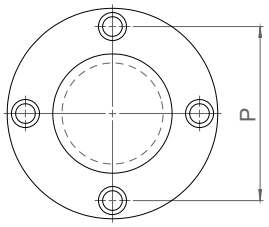

T	L
20	25
25	30
30	35
35	40
40	45
45	50
50	55
55	60

PD = 30 - 60

PD = 80 - 100

SS400
Black Oxide (Fe304)

T = 20, ℓ = 12

ORDER EXAMPLE: Model | PD - T - Color → 25SKEB50-40-R

มีสกรูในชุด
Mounting Bolts Included

ความยาวสกรูเปลี่ยนตามค่า T
Bolt Length change depend on T

Model	PD	T (5mm. increment)	Color	D1	d	P	d1	d2	ℓ	Mounting Bolt
25SKEB	30	20 - 30	R (สีแดง/Red)	96	35	72	17.5	11	15	24CB10xL
	40	20 - 40		106	45	82				
	50	20 - 55	Y (สีเหลือง/Yellow)	116	55	92				
	60			126	65	102				
	80		N (สีรมดำ/Blacken)	150	85	124	20	14		24CB12xL
	100	20 - 50		170	105	144				

Distant Guide Ring - ไกด์ริงกั้นระยะ

Model: 25SHKD

OIL FREE™



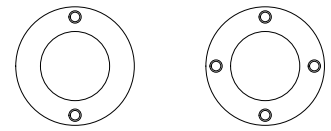

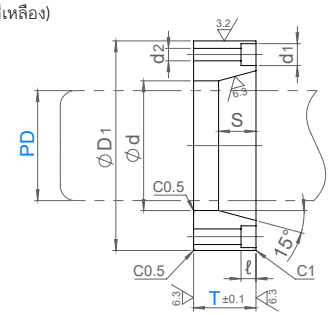

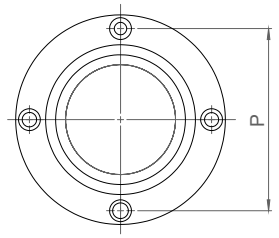

PD = 30 - 60

PD = 80 - 100

SS400
Black Oxide (Fe304)

ORDER EXAMPLE: Model | PD - T - Color → 25SHKD-50-R

Model	PD	T (5mm. increment)	Color	D1	d	P	S		d1	d2	ℓ	D2	D3
							T = 25	T ≥ 30					
25SHKD	38	25 - 55	R (สีแดง/Red)	108	54	88	23	28	17.5	11	15	38	50
	50			118	64	98						50	60
	60		Y (สีเหลือง/Yellow)	148	84	126						60	80
	80			168	104	146						80	100
	100		N (สีรมดำ/Blacken)	188	124	166			20	14		100	-

SUN RISE technologies
Tel: +662-030-0092 Fax: +662-324-3190 / +662-324-3103
Website: www.sunrisegr.com Email: sale@sunrisegr.com

Ball Guide Post (For Die) - ไกด์โพสลูกปืน สำหรับดาย

Model: 25PKSL Model: 25PKSLU

OF OIL FREE™

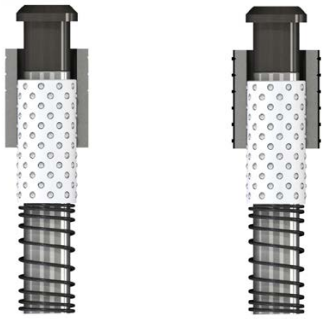

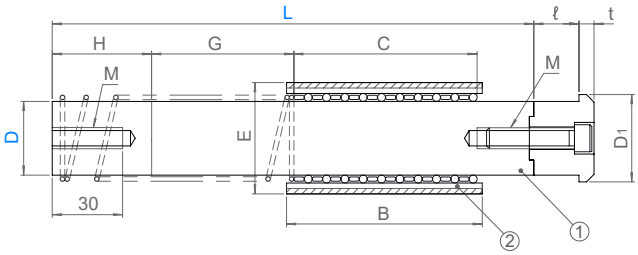

ORDER EXAMPLE: Model D - L → 25PKSL50-280

25PKSL
①② M SUJ2 58HRC~

25PKSLU (with Urethane)
① M SUJ2 58HRC~ ② M SUJ2 58HRC~ Urethane Shore A90

Model	D		L	E	E tolerance 25PKSL	E tolerance 25PKSLU	B	C	ℓ	M	t	D1	G Min	H
25PKSL 25PKSLU	50	+0.035 +0.030	240	83	0 -0.010	+0.100 0	120	110	40	12	10	58	30	60
			280						20					
	60		260	95			130	120	50			68		80
			300						30					
	80		300	120	0 -0.012		140	130	50			88		100
			340						30					
	100	+0.040 +0.032	350	145			160	150	50	16	15	108	40	120
			400						30					
			450						10					

Ball Guide Post (For Pad) - ไกด์โพสลูกปืน สำหรับแพ็ด

Model: 25PKS Model: 25PKSU

OF OIL FREE™

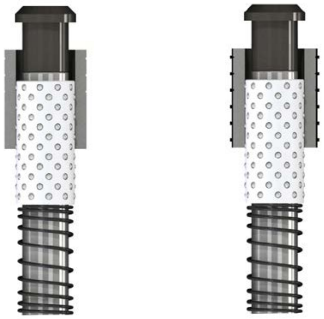

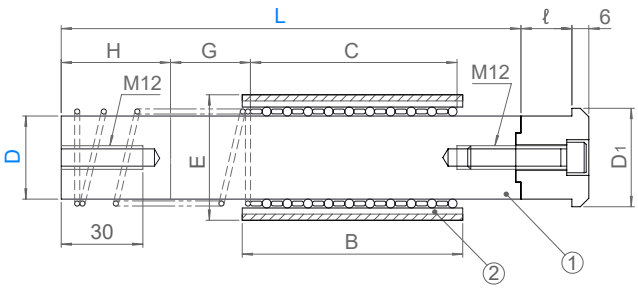

ORDER EXAMPLE: Model D - L → 25PKSU50-160

25PKS
①② M SUJ2 58HRC~

25PKSU (with Urethane)
① M SUJ2 58HRC~ ② M SUJ2 58HRC~ Urethane Shore A90

Model	D		L (10mm increment)	E	E tolerance 25PKS	E tolerance 25PKSU	B	C	ℓ	D1	G Min	H
25PKS 25PKSU	38	+0.030 +0.025	130 - 160	64	0 -0.008	+0.100 0	80	50	20	46	20	40
			170 - 200					75	30		25	
	50	+0.035 +0.030	150 - 190	83	0 -0.010		100	60	20	58	30	50
			200 - 240					90	30			
	60		170 - 210	95				70	20	68	30	60
			220 - 260					90	30		20	
	80		260 - 300	120						88		80

ไกด์ และ บุช

Oil Free™ Bush (Universal) - บุชออยฟรี™



บุชทองเหลืองออยฟรี สำหรับนำไปใช้ได้ในหลากหลายอุตสาหกรรม
เช่น แม่พิมพ์ ปั้ม/ฉีด, ชิ้นส่วนเครื่องจักร, ระบบอัตโนมัติ, งานก่อสร้าง,
ยานยนต์ สามารถหล่อลื่นได้โดยไม่ต้องเติมน้ำมันขณะใช้งาน

Oil Free bush for universal use in many dry application such as die/mold, machinery, automation, construction, automobile. The Oil Free bush is self lubrication and work without grease.

OIL FREE™

Model: 25SBW

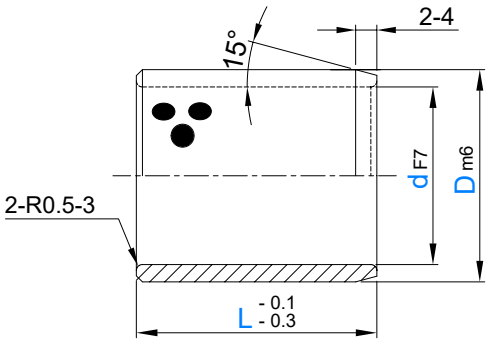

ORDER EXAMPLE 25SBW d - D - L
25SBW25-35-50

Temperature Resistance
-40° C ~ 300°C

Copper Alloy
Oil Free™ Solid Lubricant

d F7		D m6		L
5	+0.022 +0.010	9	+0.015 +0.006	8 10 12 15
6		10		8 10 12 15 16 20
8	+0.028 +0.013	12	+0.018 +0.007	8 10 12 15 16 20 25
10		14		8 10 12 15 16 20 25 30
12	+0.034 +0.016	18		8 10 12 15 16 20 25 30 35
13		19	+0.021 +0.008	10 12 15 16 20 25 30 35
14		20		10 12 15 16 20 25 30 35
15		21		10 12 15 16 20 25 30 35 40
16		22		10 12 15 16 20 25 30 35 40
17		23		15 30 35
18		24		10 12 15 16 20 25 30 35 40
19	+0.041 +0.020	26		15 20
20		28		10 12 15 16 20 25 30 35 40 50 60 70
		30		16 20 25 30 35 40 50 60 70 100
22		32	+0.025 +0.009	12 15 20 25
25		33		12 15 16 20 25 30 35 40 50 60
		35		12 15 16 20 25 30 35 40 50 60 70 80
28		38		20 25 30 40
30		38		12 15 16 20 25 30 35 40 50 60 70 80
		40		12 15 16 20 25 30 35 40 50 60
31.5	+0.050 +0.025	40		30 40
32		42		20 30 40

SUN RISE technologies
Tel: +662-030-0092 Fax: +662-324-3190 / +662-324-3103
Website: www.sunrisegr.com Email: sale@sunrisegr.com

Oil Free(TM) Bush (Universal) - บุชออยฟรี(TM)



Model: 25SBW

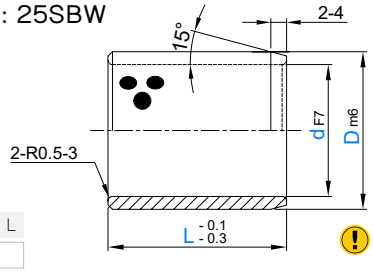

OF OIL FREE™

ORDER EXAMPLE	25SBW	d - D - L
	25SBW25-35-50	

Temperature Resistance
-40° C ~ 300°C

Copper Alloy
Oil Free(TM) Solid Lubricant

d F7		D m6		L
35	+0.050 +0.025	44	+0.025 +0.009	20 25 30 35 40 50 60 70
		45		20 25 30 35 40 50 60 70
38		48		30 40
40		50		15 20 25 30 35 40 50 60 70 80
		55	+0.030 +0.011	15 25 30 35 40 50 60
45		55		30 35 40 50 60
		56		30 35 40 50 60 70 80
		60		30 35 40 50 60 70 80
50		60		20 30 35 40 50 60 70 80
		62		30 35 40 50 60 70 80
		65		30 40 50 60 70 80 100
55	+0.060 +0.030	70		40 50 60 70
60		74		30 35 40 50 60 70 80 100
		75		30 35 40 50 60 70 80 100
63		75		60 70 80
65		80		40 50 60 70 80
70		85	+0.035 +0.013	30 35 40 50 60 70 80 100
		90		50 60 70 80 100
75		90		50 60 70 80 100
		95		60 70 80 100
80		96		40 50 60 70 80 100 120
		100		40 50 60 70 80 100 120 140
85	+0.071 +0.036	100		60 80
90		110		30 50 60 70 80 90 100 120
100		120		50 60 70 80 100 120 140
110		130	+0.040 +0.015	50 70 80 100 120
120		140		70 80 90 100 120 140
125	+0.083 +0.043	145		100 120
130		150		80 100 130
140		160		100 140
150		170		80 100 150
160		180		80 100 150

ไกด์ และ บุช

Oil Free(TM) Washer (Universal) - แหวนออยฟรี(TM)

OIL FREE™



ไม่มีรูยึดสกรู
No bolt holes
Model: 25WSBW-N

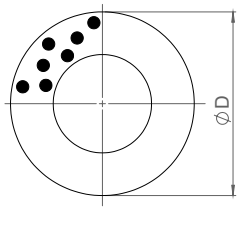

มีรูยึดสกรู
With bolt holes
Model: 25WSBW

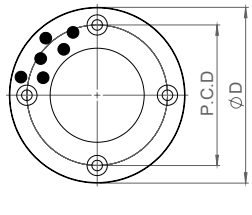

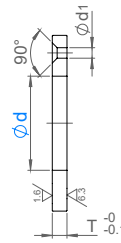

ORDER EXAMPLE — Model - No. — 25WSBW-25

Temperature Resistance
-40° C ~ 300°C

Copper Alloy
Oil Free(TM) Solid Lubricant

Model	No.	d	D	T	P.C.D	Number of Holes	Flat Head Screw	d1
25WSBW (with holes) 25WSBW-N (no holes)	6	6.2	25	3	15	2	M3	3.5
	8	8.2	28		18			
	10	10.2	30		20			
	12	12.2	40		28			
	13	13.2						
	14	14.2						
	15	15.2	50		35			
	16	16.2						
	18	18.2						
	20	20.2		5			M5	6
	25	25.2	55		40			
	30	30.2	60		45			
	35	35.2	70		50			
	40	40.2	80	7	60		M6	7
	45	45.3	90		67.5			
	50	50.3	100	8	75	4		
	55	55.3	110		85			
	60	60.3	120		90		M8	9
	65	65.3	125		95			
	70	70.3	130	10	100			
	75	75.3	140		110			
	80	80.3	150		120			
	90	90.5	170		140		M10	11
	100	100.5	190		160			
	120	120.5	200		175			

SUN RISE technologies
Tel: +662-030-0092 Fax: +662-324-3190 / +662-324-3103
Website: www.sunrisegr.com Email: sale@sunrisegr.com

Oil Free(TM) Flange Bush (Universal) - บุชมีบ่าออยฟรี(TM)

OF OIL FREE™



Model: 25FSBW

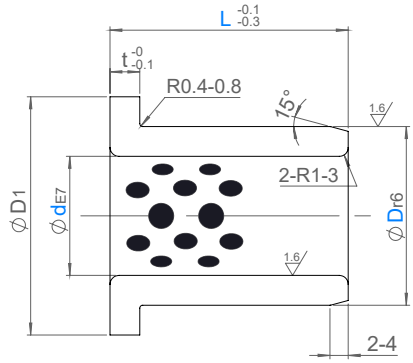

ORDER EXAMPLE: 25FSBW d - D - L → 25FSBW25-35-50

Temperature Resistance -40° C ~ 300°C

Copper Alloy Oil Free(TM) Solid Lubricant

d E7		D r6		L											D1	t
5	+0.032 +0.020	9	+0.028 +0.019	10	12										14	2
6		10		10	12	15									16	
8	+0.040 +0.025	12	+0.034 +0.023	10	12	15		20							20	
10		14		10	12	15		20	25	30					22	
12	+0.050 +0.032	18		10	12	15		20	25	30					25	3
13		19		10	12	15	17	20	25	30					26	
14		20	+0.041 +0.028			15		20	25	30					27	
15		21		10	12	15		20	25	30					28	
16		22			12	15		20	25	30	35	40			29	
18		24				15		20	25	30	35	40			32	
20	+0.061 +0.040	30				15		20	25	30	35	40			40	5
25		35	+0.050 +0.034			15		20	25	30	35	40	50		45	
30		40						20	25	30	35	40	50		50	
31.5	+0.075 +0.050							20	25	30	35	40	50			
35		45						20	25	30	35	40	50		60	
40		50						20	25	30	35	40	50		65	
45	+0.090 +0.060	55	+0.060 +0.041					20	25	30	35	40	50	60	70	
50		60						20	25	30	35	40	50	60	75	
55		65								30	35	40		60	80	
60		75	+0.062 +0.043							30	35	40	50	60	80	90	7.5
70		85	+0.073 +0.051										50	60	80	105	
75		90												60	80	110	
80		100												60	80	100	120	10
90	+0.107 +0.072	110	+0.076 +0.054											60	80	100	130	
100		120													80	100	150	
120		140	+0.088 +0.063												80	100	170	

ไกด์ และ บุช

Oil Free™ Guide Bar - ไกด์บาร์ออยฟรี™

NEW รุ่นใหม่ สามารถเปลี่ยนแผ่นสไลด์ได้
New type that can change the slide plate.

OF OIL FREE™

Model 25SWGB-W
ทองเหลือง Copper Alloy



Model 25SWGB-I
เหล็กอัลลอย Alloy Steel



Model 25SWGB-S
แผ่นซินเตอร์ Sintered



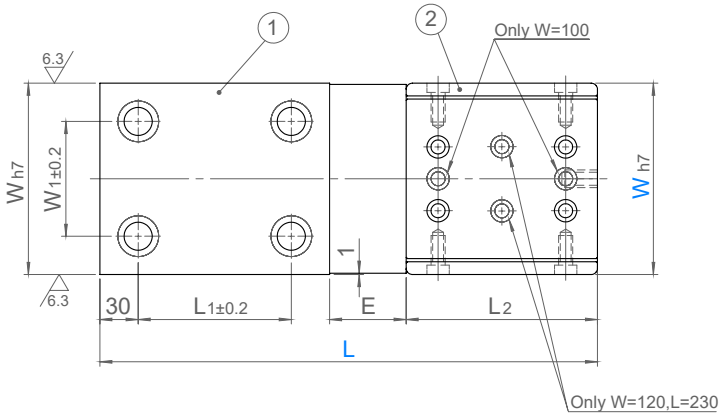

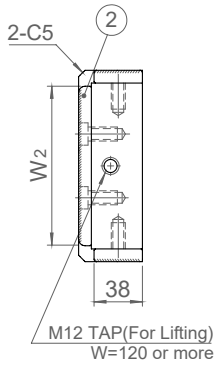

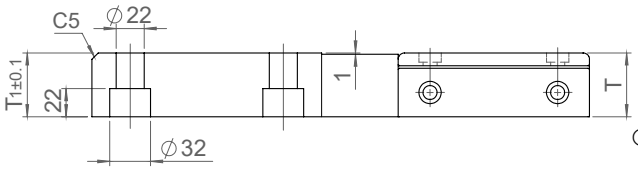

① Ⓜ SS400

25SWGB-W ② Ⓜ Copper Alloy + Oil Free™ Solid Lubricant

25SWGB-I ② Ⓜ SKS3 + Oil Free™ Solid Lubricant

25SWGB-S ② Ⓜ Sintered + Oil Free™ Solid Lubricant

ORDER EXAMPLE Model W - L
25SWGB-W100-230

Model	W h7		L	L1	L2	W1	W2	T	E
25SWGB-W 25SWGB-I 25SWGB-S	100	0 -0.035	230	60	75	60	75	45	35
			280		125				
			330	100					45
			390	120	150				60
	120		230	60	75		100		35
			280		125				
			330	100					45
			390	120	150				60
	150	0 -0.040	280	60	125	90	125	50	35
			330	100					45
			390	120	150				60
			430	140					80

SUN RISE technologies
Tel: +662-030-0092 Fax: +662-324-3190 / +662-324-3103
Website: www.sunrisegr.com Email: sale@sunrisegr.com

Oil Free™ Guide Bar - ไกด์บาร์ออยฟรี™

Model: 25SGPF

OIL FREE™



W = 80 - 90

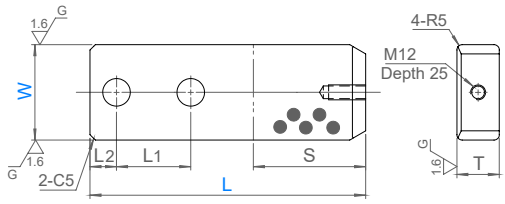



W = 120

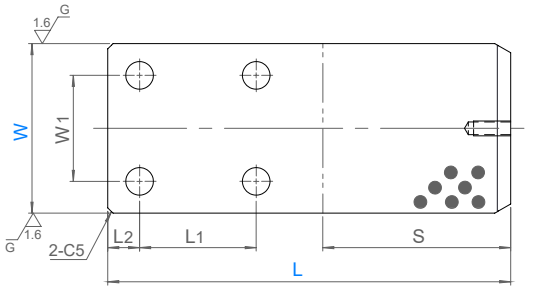

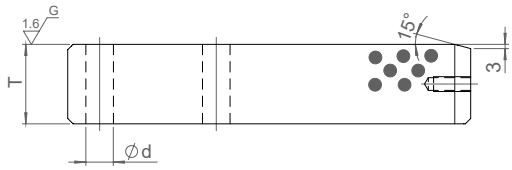

ORDER EXAMPLE Model W - L
25SGPF120-280

M FC250
Oil Free™ Solid Lubricant

Model	W		L	L1	L2	W1	S	d	T
25SGPF	80	0 -0.025	220	60	25	-	80	22	40
			260	70					
			300						
	90		220	60					
			260	70					
			300						
	120	0 -0.035	280	80		70	120		60
			340	100					
			380						
	130		280	80					
			340	100					
			380						
	150	0 -0.040	340	110	30	100	130	26	75
			380						
			430						
	160		340						
			380						
			430						
	180	0 -0.046	340	130		120	140		90
			380	380					
			430	430					
	190		340	340					
			380	380					
			430	430					

ไกด์ และ บุช

Oil Free™ Guide Bar - ไกด์บาร์ออยฟรี™

Model: 25SGPZ

OIL FREE™



W = 50 - 70

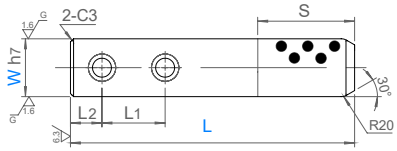

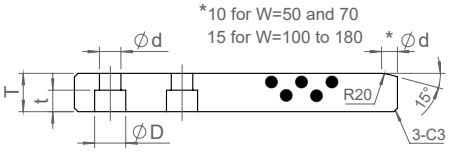

W = 100 - 150

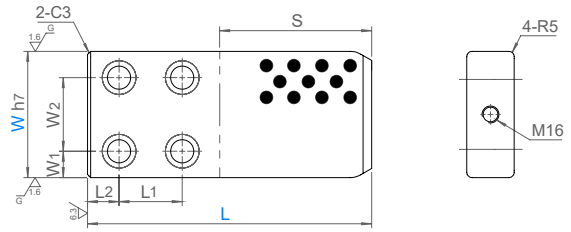

S45C
Oil Free™ Solid Lubricant

S Area 55HRC-(Induction Harden)

W = 180

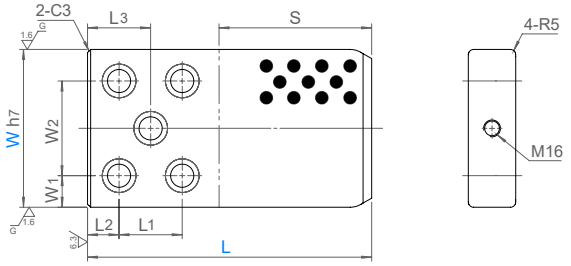

ORDER EXAMPLE: Model W - L → 25SGPZ100-280

Model	W h7		L	L1	L2	L3	W1	W2	D	d	t	T	S
25SGPZ	50	0 -0.025	160	20	50	-	-	-	26	18	18	30	60
			200										120
			260		80								
	70	0 -0.030	230	25	60							35	100
			260										160
			300		75								
			350		150								150
	100	0 -0.035	230	30	60		20	60	32	22	22	45	100
			280										160
			330		100								
			390		120								200
	120		230		60		30						100
			280										160
			330		100								
			390		120								200
	150		280		60			90				50	160
			330		80								190
			390		140								
			430		180								
	180	0 -0.040	280		60	60		120				55	160
			330		80	70							190
			390		140	100							
			430		180	120							
			480		200	130							200
			550		225	142.5							250

SUN RISE technologies
Tel: +662-030-0092 Fax: +662-324-3190 / +662-324-3103
Website: www.sunrisegr.com Email: sale@sunrisegr.com

Oil Free(TM) Guide Bar - ไกด์บาร์ออยฟรี(TM)

OIL FREE™



แบบไม่มีรูสกรู
Without bolt holes
Model: 25SWGZ



แบบมีรูสกรู
With bolt holes
Model: 25SWGAZ / 25SWGBZ

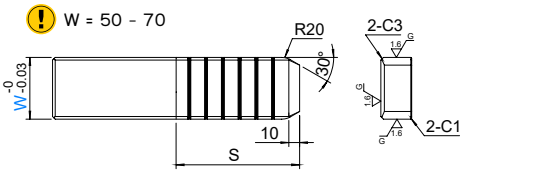

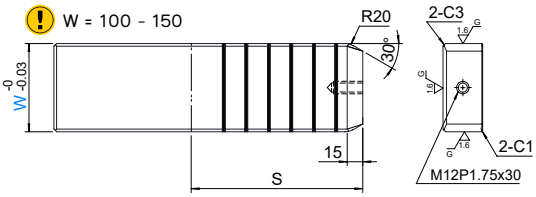



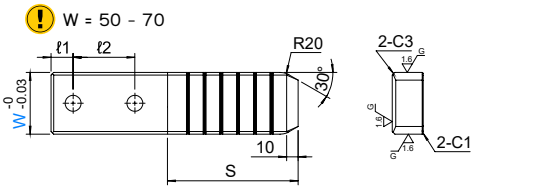

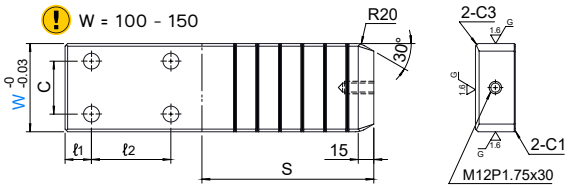

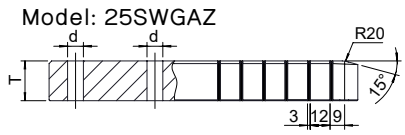

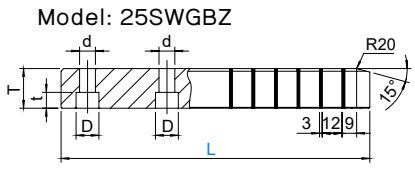

ORDER EXAMPLE: Model W - L
25SWGZ100-300

S45C
Oil Free(TM) Solid Lubricant
S Area 55HRC~(Induction Harden)

Model	W	L	T	Grooves	S	ℓ1	ℓ2	C	d	D	t
25SWGZ 25SWGAZ 25SWGBZ	50	160	30	3	60	20	50	-	18	26	18
		190		5	90						
		220		7	120						
	70	230	35	6	100	25	60				
		270		9	140						
		310		11	180						
	100	300	45	8	130	30	90	60			
		350		11	180						
		400		14	230						
	130	350	50	9	150	30	120	80	22	32	22
		400		12	200						
		450		16	250						
	150	420	60	11	180	35	150	100			
		470		14	230						
		520		18	280						

ไกด์ และ บุช

Guide Bar X Oil Groove - ไกด์บาร์ ร่องน้ำมันตัว X

OF OIL FREE™



แบบไม่มีรูสกรู
Without bolt holes
Model: 25SGW



แบบมีรูสกรู
With bolt holes
Model: 25SGWA / 25SGWB

W = 50 - 70

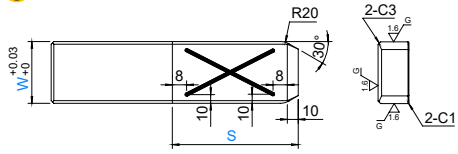

W = 100 - 180

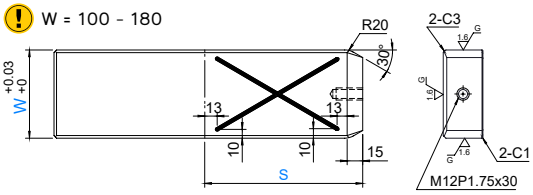

Model: 25SGW

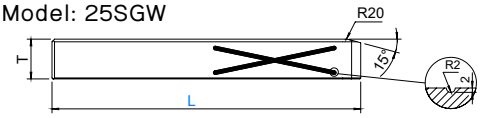

W = 50 - 70

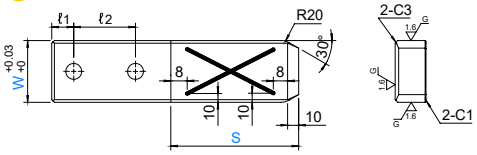

W = 100 - 180

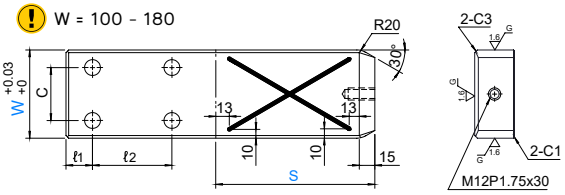

Model: 25SGWA

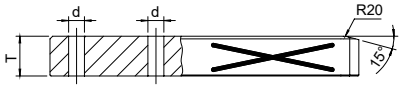

Model: 25SGWB

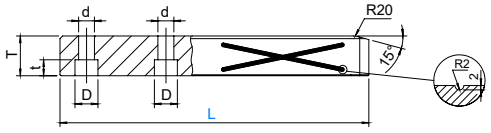

ORDER EXAMPLE

Model W - S - L

25SGW70-120-240

Ⓜ S45C

S Area Ⓜ 55HRC-(Induction Harden)

Model	W	S	L 10mm increment	T	ℓ1	ℓ2	C	d	D	t
25SGW 25SGWA 25SGWB	50	60	150 - 180	30	20	50	-	18	26	18
		90	190 - 250							
	70	90	200 - 250	35	25	60				
		120	230 - 350							
	100	120	270 - 320	45	30	90	60			
		180	330 - 400							
	130	150	300 - 380	50	30	90	80	22	32	22
		210	390 - 500			120				
	150	180	340 - 450	60	35	90	100			
		240	460 - 550			150				
	180	200	380 - 470			110	120			

SUN RISE technologies
Tel: +662-030-0092 Fax: +662-324-3190 / +662-324-3103
Website: www.sunrisegr.com Email: sale@sunrisegr.com

Guide Bar O-Oil Groove - ไกด์บาร์ ร่องน้ำมันตัว O

OF OIL FREE™



แบบไม่มีรูสกรู
Without bolt holes
Model: 25SGO



แบบมีรูสกรู
With bolt holes
Model: 25SGOA / 25SGOB

W = 50 - 70

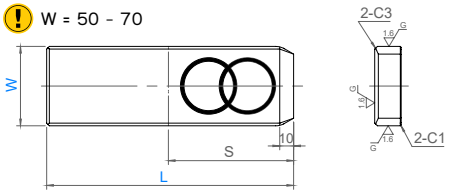

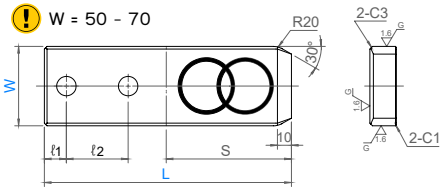

W = 100 - 180

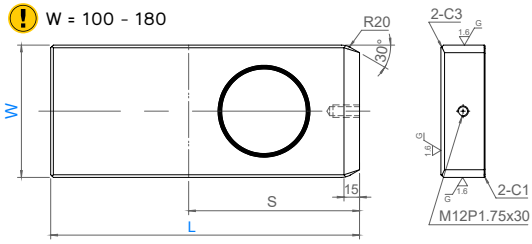

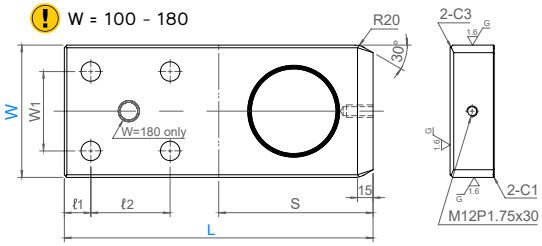

Model: 25SGO

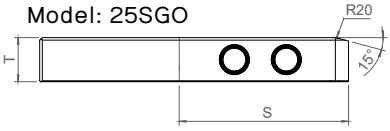

Model: 25SGOA

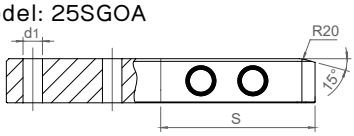

Model: 25SGOB

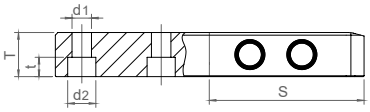

M S45C

S Area M 55HRC~(Induction Harden)

ORDER EXAMPLE: Model W - L → 25SGO100-160

ร่องน้ำมัน
Oil Grooves

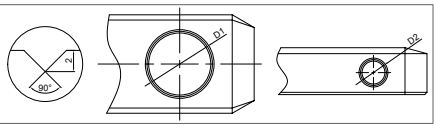

Model	W		L	T	S	ℓ1	ℓ2	W1	d1	d2	t	Oil Grooves qty x D1	Oil Grooves qty x D2
25SGO 25SGOA 25SGOB	70	0 -0.030	230	35	100	25	60	-	18	26	18	2 x 50	2 x 20
			260		160								3 x 20
			300				75						
	100	0 -0.035	230	45	100	30	60	60	22	32	22	1 x 63	2 x 20
			280		160							2 x 63	3 x 20
			330				100						
	120		230		100		60					2 x 50	2 x 20
			280		160							4 x 50	3 x 20
			330				100						
			390		200		120						4 x 20
	150	0 -0.040	280	50	160		60	90				4 x 63	3 x 20
			330		190		80					5 x 50	4 x 20
			390				140						
	180		280	55	160		60	120					3 x 20
			330		190		80						4 x 20
			390				140						
			430				180						

ไกด์ และ บุช

Pad Keepers - แพ็ทคีปเปอร์

OIL FREE™

Model: 25SKPN



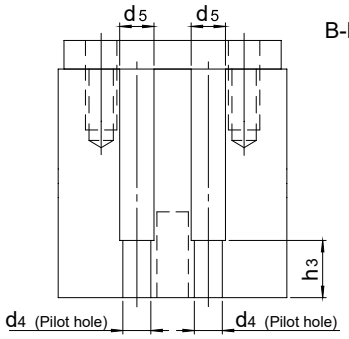

B-B' Cross section



เปลี่ยนแบบร่องน้ำมัน เป็นแบบ ออยฟรี ได้
Can change oil groove to Oil Free type

A-A' Cross section

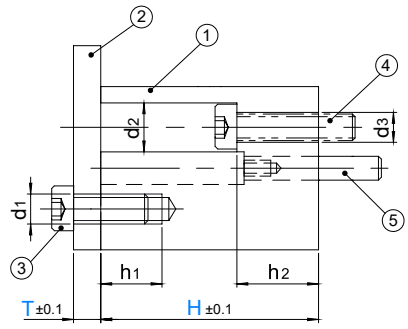

Model: 25SKPNZ



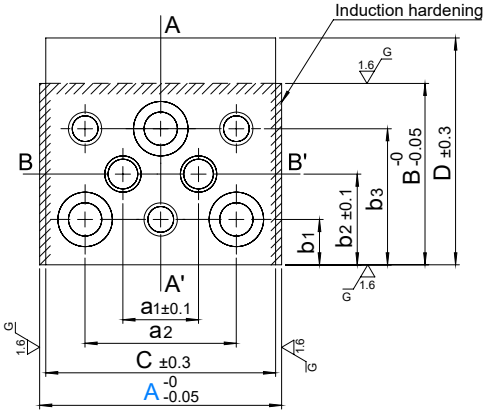

		A = 80	A = 100
③	T=10	24CB10-30 3 pcs	24CB12-35 3 pcs
	T=15	24CB10-35 3 pcs	24CB12-40 3 pcs
	T=20	-	24CB12-45 3 pcs
④		24CB10-50 3 pcs	24CB12-55 3 pcs
⑤		Dowel 10-40 2 pcs	Dowel 13-50 2 pcs

ORDER EXAMPLE Model A - H - T
25SKPN80-50-10

Ⓜ S45C
45HRC-(Induction Harden)

Model	A	H	T	B	a1	a2	b1	b2	b3	d1	d2	d3	d4	d5	h1	h2	h3	MxP	C	D
25SKPN 25SKPNZ	80	50	10 15	60	25	50	15	30	45	11	18	11	9.8	12	25	30	20	10 x 1.5	76	75
		60																		
		70																		
		80																		
		100																		
		120																		
	100	60	10 15 20	70	30	60	20	35	50	13	20	13	128	15	30		25	12 x 1.75	96	85
		70																		
		80																		
		100																		
		120																		

OPTION EXAMPLE Model A - H (HC) - T - (NC)
25SKPN80-HC65-10-NC

การปรับแต่งเสริม | Options

Options	Code	Description
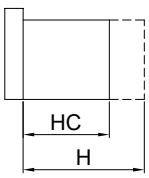	HC	Hmin < HC < Hmax if H-HC < 10, h2 and h3 will be smaller by H-HC if 10 ≤ H-HC < 20, h2 amd h3 will be smaller by H-HC-10

Options	Code	Description
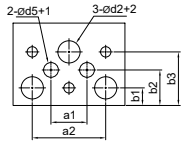	NC	add holes for removing bolts and dowel pins on the plate for removing the set while the plate is still on the block

SUN RISE technologies
Tel: +662-030-0092 Fax: +662-324-3190 / +662-324-3103
Website: www.sunrisegr.com Email: sale@sunrisegr.com

Pad Guide Block - แพ็ทไกด์บล็อค

OF OIL FREE™

Model: 25SPWN

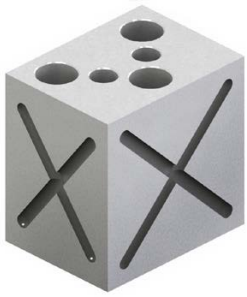

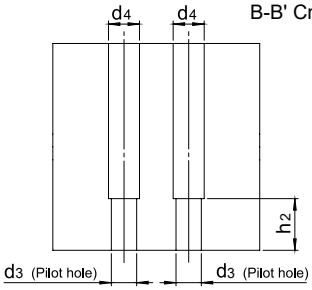

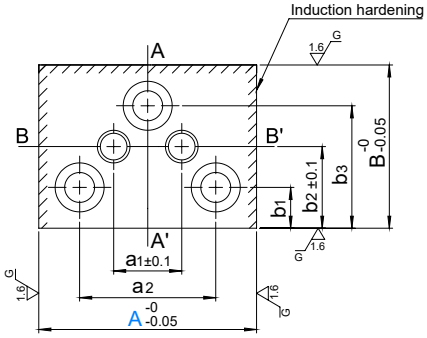

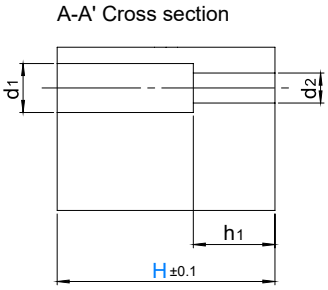

A = 80	A = 100
24CB10-50 3 pcs	24CB12-55 3 pcs
Dowel 10-40 2 pcs	Dowel 13-50 2 pcs

S45C
45HRC~(Induction Harden)

ORDER EXAMPLE: Model A - H → 25SPWN80-100

Model	A	H	B	a1	a2	b1	b2	b3	d1	d2	d3	d4	h1	h2
25SPWN	80	50	60	25	50	15	30	45	18	11	9.8	12	30	20
		60												
		70												
		80												
		100												
		120												
	100	60	70	30	60	20	35	50	20	13	12.8	15		25
		70												
		80												
		100												
		120												

OPTION EXAMPLE: Model A - H (HC) - (CC) → 25SKPWN80-HC55-CC

การปรับแต่งเสริม | Options

Options	Code	Description
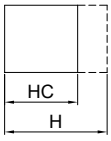	HC	Hmin < HC < Hmax if H-HC < 10, h2 and h3 will be smaller by H-HC if 10 ≤ H-HC < 20, h2 amd h3 will be smaller by H-HC-10

Options	Code	Description
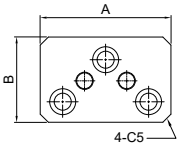	CC	Add C5 to all the corner

Pad Keepers - แพ็ทคีปเปอร์

OF OIL FREE™

Model: 25SKPNP



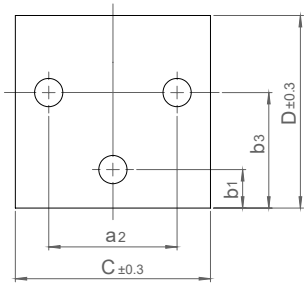

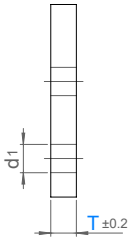

ORDER EXAMPLE: Model A - T → 25SKPNP80-10

Model	A	T	C	D	a2	b1	b3	d1
25SKPNP	80	10 15	76	75	50	15	45	11
	100	10 15 20	96	85	60	20	50	13

ไกด์โพสเซ็ต
GUIDE POST SETS







Name	Integrated Guide Post Set	Integrated Oil Free™	Guide Post Set	Oil Free™ Guide Post Set	Ball Guide Post Set Movable Stopper	
Model	25N-SYP	25N-SYZP	25SYP	25SYZP	25SYAP	25SYJP
Page	22	22	23	23	24	24





Name	Ball Guide Post Set Fixed Stopper		Flat Stroke End Blocks
Model	25SYKP	25SJKP	25SEBY / 25SEBA / 25SSBY / 25SSBA
Page	25	25	26





Name	Stroke End Blocks	Chain for Stroke End Block
Model	25SEB / 25SSB	25RSC
Page	27	28

ข้อดีของการเปลี่ยนมาใช้ไกด์โพสรุ่นใหม่ ยึดติดแน่นกับฐาน
Why change to the new Integrated Guide Post Set Type

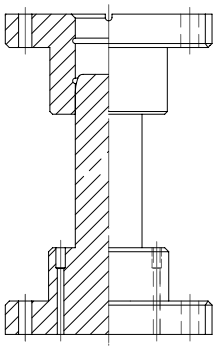

- ✓ แข็งแรงยิ่งขึ้น ส่วนฐานและเสายึดติดแน่น
  Stronger due to integration of the base and guide post.
- ✓ ฐานผลิตจากเหล็ก S45C แทนเหล็กหล่อ
  Steel base instead of cast iron.
- ✓ ยังสามารถเลือกแบบออยฟรี™ เป็นสารหล่อลื่นได้เหมือนเดิม
  Can still choose to use Oil Free™ as lubricant.
- ✓ โดยรวมแล้วประหยัดคุ้มค่ากว่าแบบเดิม
  Better value and cost saving overall.

SUN RISE technologies
Tel: +662-030-0092 Fax: +662-324-3190 / +662-324-3103
Website: www.sunrisegr.com Email: sale@sunrisegr.com

Integrated Guide Post Set - ไกด์โพสเซ็ต รุ่นยึดติดแน่นกับฐาน

OIL FREE™

NEW



Model
25N-SYP

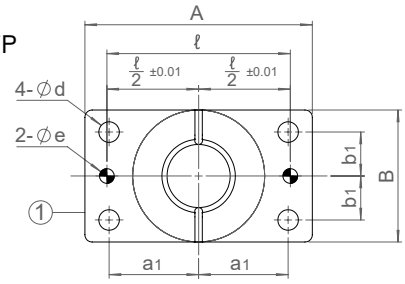

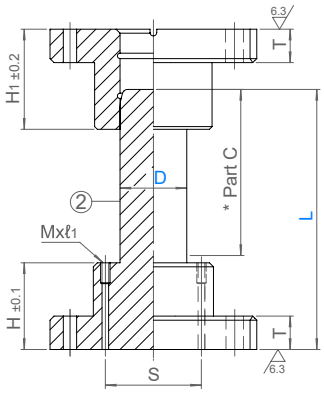

เสากับฐานยึดติดแน่น เพิ่มความทนทาน
Integrated guide and holder
for longer tool life.

① Ⓜ FC250

② Ⓜ S45C
Part C 55HRC~
(Induction Harden)

ORDER EXAMPLE 25N-SYP D - L
25N-SYP32-150

D	L												A	B	d	H	H1	T	ℓ	a1	b1	S	M	ℓ1	e H7		Bolts	Dowel Pin
25	90	100	110	120	130	140	150	160	170	180	200		84	48	9	30	45	20	66	33	15	37	4	12	8	+0.015 0	24CB8x35	8-30
32		100	110	120	130	140	150	160	170	180	200		100	58	11	40	50		76	38	18	45	4	12			24CB10x40	
38				120	130	140	150	160	170	180	200	220	250	130	75		50	60	25	100	50	22	60	5	15	10		24CB10x45	10-40
50								160	170	180	200	220	250	155	90	14	65	85		125	62.5	30	72	6	15			24CB12x50	

Integrated Oil Free(TM) Guide Post Set - ไกด์โพสเซ็ต ระบบออยฟรี(TM) รุ่นยึดติดแน่นกับฐาน

OIL FREE™

NEW



Model
25N-SYZP

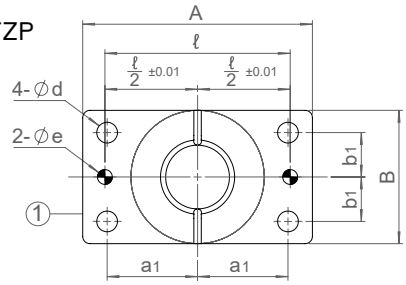

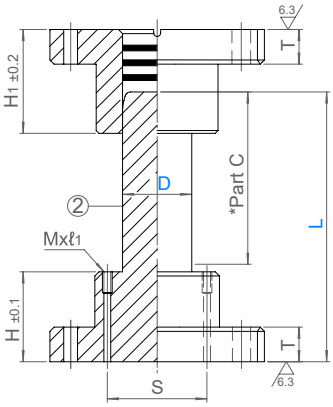

เสากับฐานยึดติดแน่น เพิ่มความทนทาน
Integrated guide and holder
for longer tool life.

① Ⓜ FC250
Oil Free™ solid lubricant

② Ⓜ S45C
Part C 55HRC~
(Induction Harden)

ORDER EXAMPLE 25N-SYZP D - L
25N-SYZP38-150

D	L												A	B	d	H	H1	T	ℓ	a1	b1	S	M	ℓ1	e H7		Bolts	Dowel Pin
25	90	100	110	120	130	140	150	160	170	180	200		84	48	9	30	45	20	66	33	15	37	4	12	8	+0.015 0	24CB8x35	8-30
32		100	110	120	130	140	150	160	170	180	200		100	58	11	40	50		76	38	18	45	4	12			24CB10x40	
38				120	130	140	150	160	170	180	200	220	250	130	75		50	60	25	100	50	22	60	5	15	10		24CB10x45	10-40
50								160	170	180	200	220	250	155	90	14	65	85		125	62.5	30	72	6	15			24CB12x50	
60										180	200	220	250	280	190	120	18	75	100	30	150	75	40	92	8	20	13	+0.018 0	24CB16x60	13-50

ไกด์โพสเซ็ต

Guide Post Set - ไกด์โพสเซ็ต มีรูโดเวลพิน แบบธรรมดา

OIL FREE™



Model
25SYP

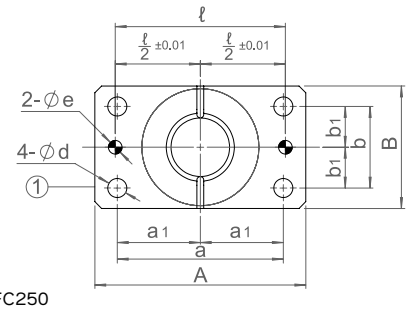

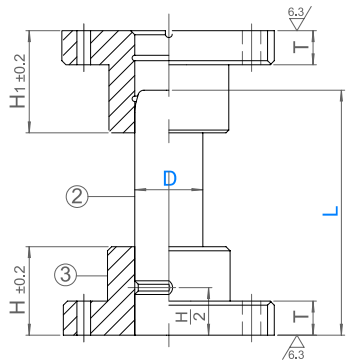

① Ⓜ FC250

② Ⓜ S45C
55HRC- (Induction Harden)

③ FC250

ORDER EXAMPLE: 25SYP D - L, 25SYP32-150

D	L	A	B	a	b	d	H	H1	T	ℓ	a1	b1	e H7	Bolts 24CB	Dowel Pin
20	80 90 100 110 120 130 140 150 160	74	44	56	30	6.6	30	40	15	56	28	15	6 +0.012 0	6x30	6-20
25	80 90 100 110 120 130 140 150 160 170 180 200	84	48	66		9		45	20	66	33		8 +0.015 0	8x35	8-30
32	90 100 110 120 130 140 150 160 170 180 200 220 250	100	58	76	36	11	40	50		76	38	18		10x40	
38	110 120 130 140 150 160 170 180 200 220 250 280 300	130	75	100	44		50	60	25	100	50	22	10	10x45	10-40
50	160 170 180 200 220 250 280 300 350	155	90	125	60	14	65	85		125	62.5	30		12x50	
60	180 200 220 250 280 300 350 400	190	120	150	80	18	75	100	30	150	75	40	13 +0.018 0	16x60	13-50

Oil Free™ Guide Post Set - ไกด์โพสเซ็ต มีรูโดเวลพิน ระบบออยฟรี™

OIL FREE™



Model
25SYZP

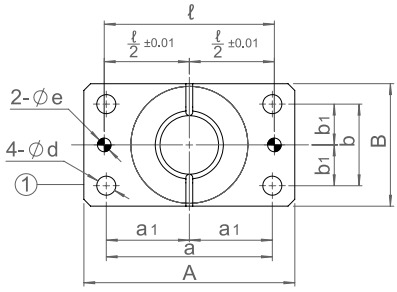

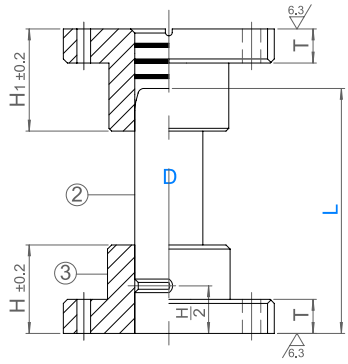

① Ⓜ FC250
Oil Free™ solid lubricant

② Ⓜ S45C
55HRC- (Induction Harden)

③ FC250

ORDER EXAMPLE: 25SYZP D - L, 25SYZP38-200

D	L	A	B	a	b	d	H	H1	T	ℓ	a1	b1	e H7	Bolts 24CB	Dowel Pin
20	80 90 100 110 120 130 140 150 160	74	44	56	30	6.6	30	40	15	56	28	15	6 +0.012 0	6x30	6-20
25	80 90 100 110 120 130 140 150 160 170 180 200	84	48	66		9		45	20	66	33		8 +0.015 0	8x35	8-30
32	90 100 110 120 130 140 150 160 170 180 200 220 250	100	58	76	36	11	40	50		76	76	18		10x40	
38	110 120 130 140 150 160 170 180 200 220 250 280 300	130	75	100	44		50	60	25	100	50	22	10	10x45	10-40
50	160 170 180 200 220 250 280 300 350	155	90	125	60	14	65	85		125	125	30		12x50	
60	180 200 220 250 280 300 350 400	190	120	150	80	18	75	100	30	150	75	40	13 +0.018 0	16x60	13-50

SUN RISE technologies
Tel: +662-030-0092 Fax: +662-324-3190 / +662-324-3103
Website: www.sunrisegr.com Email: sale@sunrisegr.com

Ball Guide Post Set Movable Stopper - ไกด์โพสเซ็ต ลูกปืน ฝาขยับได้

OIL FREE™

ปลอกลูกปืนอลูมินัม
Aluminum Ball Retainer
Model: 25SYAP



①⑤ Ⓜ FC250
② Ⓜ SUJ2 58HRC~
③ Ⓜ Aluminum
④ Ⓜ SUJ2 58HRC~ (Induction Harden)

ปลอกลูกปืนเรซิน
Resin Ball Retainer
Model: 25SYJP



①⑤ Ⓜ FC250
② Ⓜ SUJ2 58HRC~
③ Ⓜ POM
④ Ⓜ SUJ2 58HRC~ (Induction Harden)

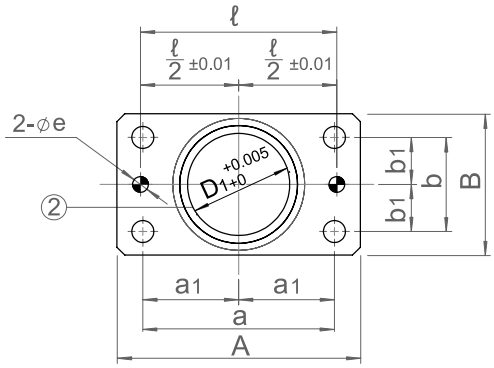

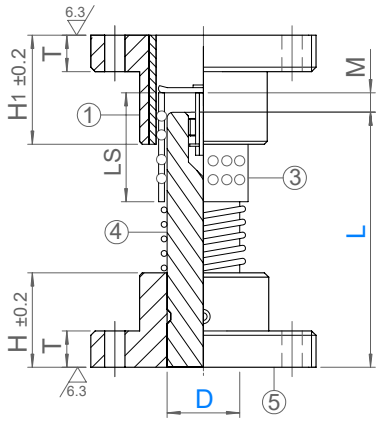

ORDER EXAMPLE Model D - L
25SYAP38-150

D	L															M (Stopper Distance)
25	90	100	110	120	130	140	150	160								0 ~ 20
32	90	100	110	120	130	140	150	160	170	180	200					0 ~ 20
38			110	120	130	140	150	160	170	180	200	220	240	260		0 ~ 25
50					130	140	150	160	170	180	200	220	240	260	300	0 ~ 29

D1	A	B	a	b	d	H	H1	T	Ls	ℓ	a1	b1	e H7		Bolts	Dowel Pin
31	84	48	66	30	9	30	50	20	50	66	33	15	8	+0.015 0	24CB8x35	8-30
40	100	58	76	36	11	40	60	20	60	76	38	18			24CB10x40	
48	130	75	100	44	11	50	70	25	70	100	50	22	10		24CB10x45	10-40
60	155	90	125	60	14	65	90	25	90	125	62.5	30			24CB12x50	

ไกด์โพสเซ็ต

Ball Guide Post Set Fixed Stopper - ไกด์โพสเซ็ต ลูกปืน ฝาล็อค

OIL FREE™

ปลอกลูกปืนอลูมินัม
Aluminum Ball Retainer
Model: 25SYKP



①⑤ Ⓜ FC250
② Ⓜ SUJ2 58HRC~
③ Ⓜ Aluminum
④ Ⓜ SUJ2 58HRC~ (Induction Harden)

ปลอกลูกปืนเรซิน
Resin Ball Retainer
Model: 25SJKP



①⑤ Ⓜ FC250
② Ⓜ SUJ2 58HRC~
③ Ⓜ POM
④ Ⓜ SUJ2 58HRC~ (Induction Harden)

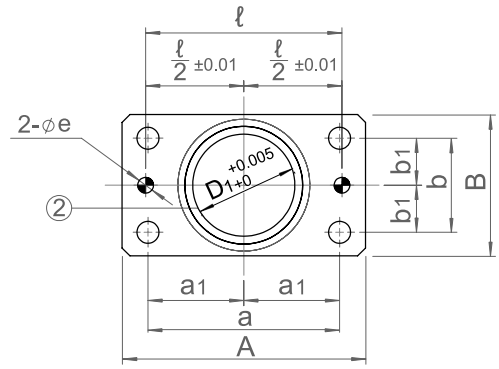

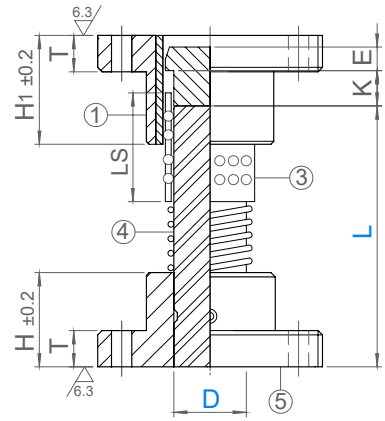

ORDER EXAMPLE Model D - L
25SYKP38-150

D	L																K (Fixed Stopper)
25	90	100	110	120	130	140	150	160	170	180	200						20
32			110	120	130	140	150	160	170	180	200	220	240	260			25
38					130	140	150	160	170	180	200	220	240	260	300		30
50									170	180	200	220	240	260	300	350	40
60											200	220	240	260	300	350	50

D1	A	B	a	b	d	H	H1	T	E	Ls	ℓ	a1	b1	e H7		Bolts	Dowel Pin
31	84	48	66	30	9	30	50	20	5	50	66	33	15	8	+0.015 0	24CB8x35	8-30
40	100	58	76	36	11	40	60	20	5	60	76	38	18			24CB10x40	
48	130	75	100	44	11	50	70	25	10	70	100	50	22	10		24CB10x45	10-40
60	155	90	125	60	14	65	90	25	10	90	125	62.5	30			24CB12x50	
70	190	120	150	80	18	75	100	30	15	100	150	75	40	13	+0.018 0	24CB16x60	13-50

SUN RISE technologies
Tel: +662-030-0092 Fax: +662-324-3190 / +662-324-3103
Website: www.sunrisegr.com Email: sale@sunrisegr.com

Flat Stroke End Blocks - สโตรคเอ็นบล็อคแบบหน้าเรียบ

OF OIL FREE™

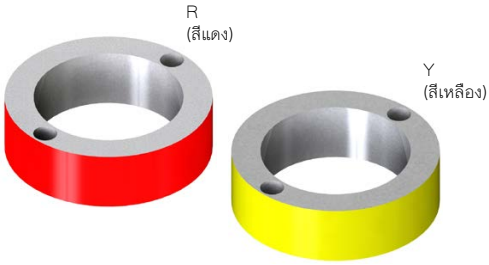

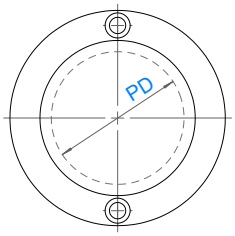

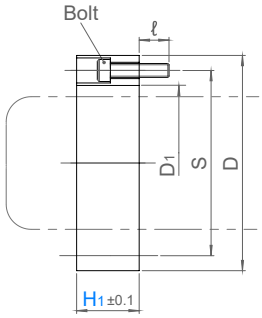

ใช้กับชุดไกด์โพสปกติ
for Guide Post Sets
Model: 25SEBY

ใช้กับชุดไกด์โพสลูกปืน
for Ball Guide Post Sets
Model: 25SEBA

ORDER EXAMPLE: Model | PD | -H1- | Color (R,Y) → 25SEBY38-45-R

Ⓜ SS400 2pcs Bolt

ⓘ ดูวิธีสั่งเป็นชุดในหน้า 28
Ordering as a set see page 28

Model	PD	H1 5mm increment	Color	D	D1	S	ℓ	Bolts
25SEBY 25SEBA	25	10 - 50	R (สีแดง/Red) Y (สีเหลือง/Yellow)	46	29	37	10	M4 x 0.7
	32	10 - 50		56	37	45		
	38	15 - 50		72	43	60		M5 x 0.8
	50	20 - 50		86	56	72		M6 x 1.0
	60	20 - 50		112	66	92	12	M8 x 1.25
	80	20 - 50		140	88	116		

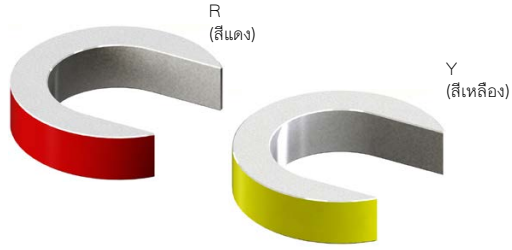

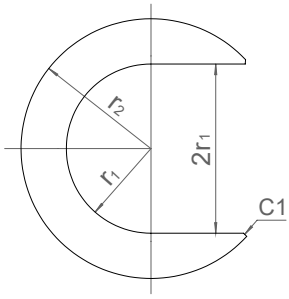

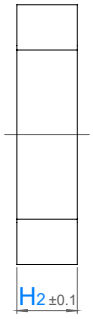

ใช้กับชุดไกด์โพสปกติ
for Guide Post Sets
Model: 25SSBY

ใช้กับชุดไกด์โพสลูกปืน
for Ball Guide Post Sets
Model: 25SSBA

ORDER EXAMPLE: Model | PD | -H2- | Color (R,Y) → 25SSBY38-45-R

Ⓜ SS400

ⓘ ดูวิธีสั่งเป็นชุดในหน้า 28
Ordering as a set see page 28

Model	PD	H2 5mm increment	Color	D	r1	r2
25SSBY 25SSBA	25	10 - 40	R (สีแดง/Red) Y (สีเหลือง/Yellow)	46	14.5	23
	32	10 - 40		56	18.5	28
	38	10 - 50		72	21.5	36
	50	10 - 50		86	28	43
	60	10 - 50		112	33	56
	80	10 - 50		140	44	70

ไกด์โพสเซ็ต

Stroke End Blocks - สโตรคเอ็นบล็อค

OIL FREE™



R
(สีแดง)



Y
(สีเหลือง)

25SEB

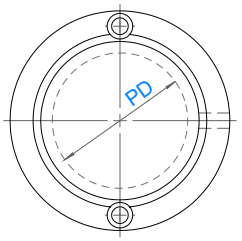

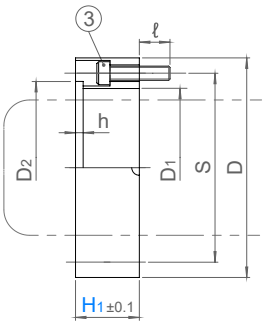

ORDER EXAMPLE: Model | PD | - H1 - | Color (R,Y) → 25SEB38-45-R

SS400
2pcs Bolt

ดูวิธีสั่งเป็นชุดในหน้า 28
Ordering as a set see page 28

Model	PD	H1 5mm increment	Color	D	D1	D2	S	h	ℓ	Bolts
25SEB	25	10 - 50	R (สีแดง/Red) Y (สีเหลือง/Yellow)	46	31.5	36	37	2	10	M4 x 0.7
	32	10 - 60		56	41	45	45			
	38	15 - 70		72	49	56	60	3		M5 x 0.8
	50	20 - 80		86	62	68	72			M6 x 1.0
	60	20 - 80		112	76	84	92		12	M8 x 1.25
	80	20 - 80		140	100	108	116			

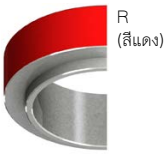

R
(สีแดง)

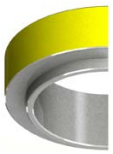

Y
(สีเหลือง)

25SSB

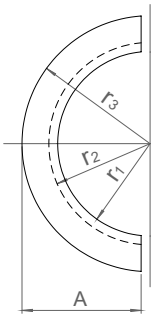

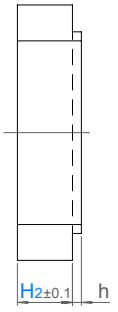

ORDER EXAMPLE: Model | PD | -H2- | Color (R,Y) → 25SSB38-45-R

SS400

ดูวิธีสั่งเป็นชุดในหน้า 28
Ordering as a set see page 28

Model	PD	H2 5mm increment	Color	D	r1	r2	r3	h	A
25SSB	25	10 - 40	R (สีแดง/Red) Y (สีเหลือง/Yellow)	46	15.75	18	23	2	22
	32	10 - 40		56	20.5	22.5	28		27
	38	10 - 50		72	24.5	28	36	3	35
	50	10 - 50		86	31	34	43		42
	60	10 - 50		112	38	42	56		55
	80	10 - 50		140	50	54	70		69

SUN RISE technologies
Tel: +662-030-0092 Fax: +662-324-3190 / +662-324-3103
Website: www.sunrisegr.com Email: sale@sunrisegr.com

การสั่งสโตรคเอ็นบล็อค แบบเป็นชุด | Ordering Stroke End Block as set

แบบหน้าเรียบ | Flat Type

OPTION EXAMPLE: Model PD - H1 Color - H2 Color - (Chain)
25SEBY-S50-30R-40Y-RS



Model	PD	H1 5mm increment	Color สี	H2 5mm increment	Color สี	Chain Type ประเภทโซ่
25SEBY-S (Guide Post Set) 25SEBA-S (Ball Guide Post)	25	10 - 50	R (สีแดง/Red) Y (สีเหลือง/Yellow)	10 - 40	R (สีแดง/Red) Y (สีเหลือง/Yellow)	S (normal) RS (Strong Chain)
	32	10 - 50		10 - 40		
	38	15 - 50		10 - 50		
	50	20 - 50		10 - 50		
	60	20 - 50		10 - 50		
	80	20 - 50		10 - 50		

แบบไม่เรียบ | Step Type

25SEB-S *(มี 25SSB 1ชิ้น / 1pc of 25SSB)*

OPTION EXAMPLE: Model PD - H1 Color - H2 Color - (Chain)
25SEB-S50-30R-40Y-RS



25SEB-W *(มี 25SSB 2ชิ้น / 2pcs of 25SSB)*

OPTION EXAMPLE: Model PD - H1 Color - H2 Color - (Chain)
25SEB-W50-30R-40Y-RS

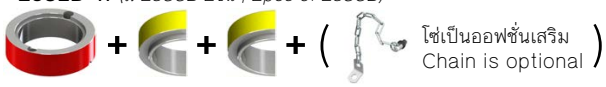

Model	PD	H1 5mm increment	Color	H2 5mm increment	Color	Chain Type ประเภทโซ่
25SEB-S *(25SSB x1)* 25SEB-W *(25SSB x2)*	25	10 - 50	R (สีแดง/Red) Y (สีเหลือง/Yellow)	10 - 40	R (สีแดง/Red) Y (สีเหลือง/Yellow)	S (normal) RS (Strong Chain)
	32	10 - 60		10 - 40		
	38	15 - 70		10 - 50		
	50	20 - 80		10 - 50		
	60	20 - 80		10 - 50		
	80	20 - 80		10 - 50		

Strong Chain for Stroke End Blocks - โซ่รุ่นแข็งแรง สำหรับ สโตรคเอ็นบล็อค

OF OIL FREE™



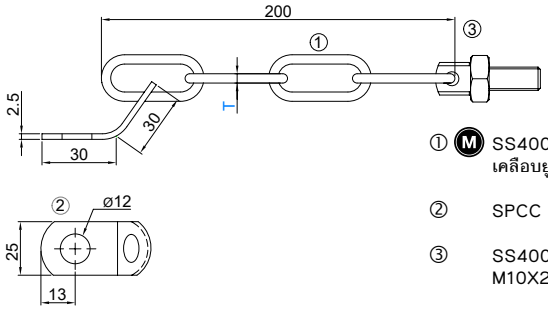

① Ⓜ SS400 เคลือบยูนิโครม
② SPCC
③ SS400 M10X20

ORDER EXAMPLE: Model T
25RSC5

Model	T
25RSC	3
	5

ไดเซ็ต
DIE SETS

				
Name	Steel Die Set (SB)	Steel Die Set (SC)	Steel Die Set (SD)	Steel Die Set (SF)
Model	25SB	25SC	25SD	25SF
Page	31	33	35	37

		
Name	Press-Fit Ball Guide Post for Die Set	Removable Ball Guide Post for Die Set
Model	25PB / 25PM / 25PK / 25GB / 25GM / 25GK	25RB / 25RM / 25RK / 25QB / 25QM / 25QK
Page	39	40

		
Name	Press-Fit Guide Post for Die Set	Removable Guide Post for Die Set
Model	25PD / 25PZ	25RD / 25RZ
Page	41	42

สูตรคำนวนค่า FL สำหรับไกด์โพสปลอกลูกปืน
Calculation Guide for Ball Guide Post 'FL'

สำหรับเสาไกด์แบบมีสต๊อปเปอร์ ค่า FL ควรมีค่าเท่ากับ 1.1 ถึง 1.2 เท่าของค่าที่ได้จากการคำนวน
For guide with stoppers. FL should be 1.1 to 1.2 times the result of calculation.

แบบสวมอัด
Press-Fit Type

FL = L - (T_1+R+(RL/2))

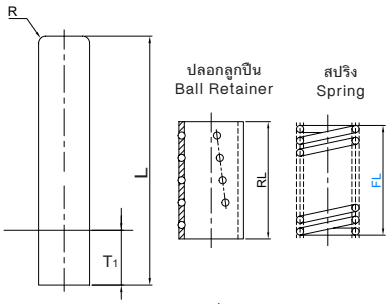

T_1 = ความหนาของที่ยึดตาย
Height of die fitting

แบบถอดได้
Removable Type

FL = L - (T+R+(RL/2))

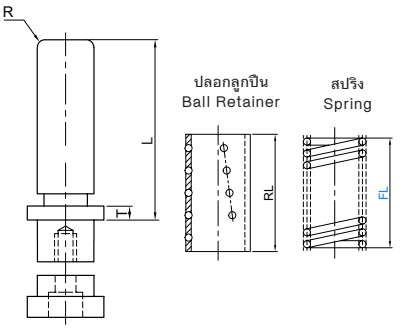

SUN RISE technologies
Tel: +662-324-3184-(89) Fax: +662-324-3190 / +662-324-3103
Website: www.sunrisegr.com Email: sale@sunrisegr.com

ตารางการเลือกไดเซ็ต | Die Sets selecting chart

Type		No. Guides	Page
25SB	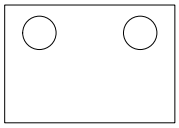	2	P 31
25SC	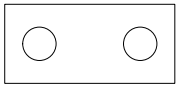	2	P 33
25SD	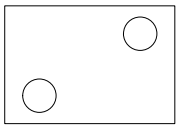	2	P 35
25SF	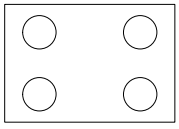	4	P 37

ขั้นตอนการเลือกไดเซ็ต
Steps in choosing Die Sets

1. เลือกประเภทของไดเซ็ตที่ต้องการ ซึ่งจะแตกต่างกันในตำแหน่งการวางเสา และจำนวนเสาของไดเซ็ต (ตารางซ้ายมือ)
2. เลือกขนาดของไดเซ็ตตามพื้นที่การใช้งานที่ต้องการ (a x b)
3. เลือกประเภทของเสาไกด์ที่ต้องการว่าต้องการแบบยึดตายหรือแบบถอดเปลี่ยนได้ (ตารางด้านล่าง)
4. เลือกประเภทบุช และปลอกลูกปืนหากเลือกบุชลูกปืน (ตารางด้านล่าง)
5. เลือกความสูง L (ขึ้นลงทีละ 10มม.) ซึ่งจะถูกกำหนดตามขนาดของค่าขนาดเสา d ในตารางสเปคสินค้า
6. เลือกความยาวบุช L1 ซึ่งมีผลต่อความสูงของไดเซ็ตตอนปิด

1. Choose die set type (left table) they are different in guide position and number of guides.
2. Choose die set size from working area (a x b)
3. Choose guide type (lower table)
4. Choose bush and ball retainer types (lower tables)
5. Choose height 'L' (10mm increment) which is limited by guide diameter 'd' in the spec table.
6. Choose bush length 'L1'

เสาไกด์ และ บุช | Guide and Bush

ประเภทของไกด์ Guide Type		Code
เสายึดตาย Fixed Guide	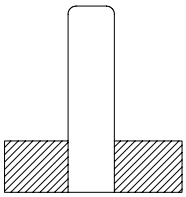	FG
เสาถอดได้ Detachable Guide	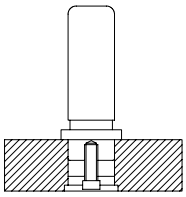	DG

ประเภทของบุช Bush Type		Code
บุชเหล็ก Steel Bush	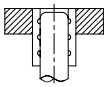	SB
บุชออยฟรี Oil Free Bush	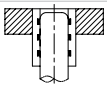	OB
บุชลูกปืน ไม่มีฝาครอบ Ball Retainer No Stopper	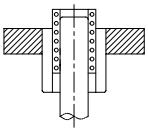	NB
บุชลูกปืน ฝาครอบเลื่อนได้ Ball Retainer Movable Stopper	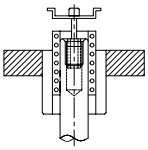	MB
บุชลูกปืน ฝาครอบตายตัว Ball Retainer Fixed Stopper	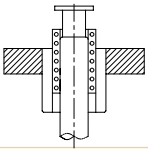	FB

ปลอกลูกปืน | Ball Retainers

Ball Retainer Type		Usage	Code
อลูมิเนัม Aluminum		แข็งแรง เหมาะกับการใช้งานโดยทั่วไป Strong, good for most usage	BA

Ball Retainer Type		Usage	Code
เรซิน Resin		น้ำหนักเบา เหมาะกับงานพรีซิชั่น Lighter, good for precision die	BS

Steel Die Set (SB) - ไดเซ็ตเหล็กเหนียว (SB)

OIL FREE™



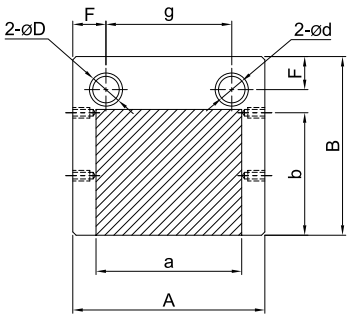

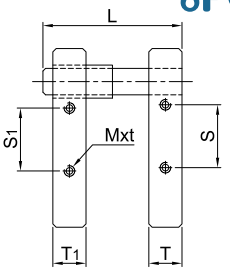

Model: 25SB

ORDER EXAMPLE: Model a - b - Guide - Bush - (Ball Retainer) - d - L - L1

25SB200-125-DG-OB-28-150-60

ดูตารางเพิ่มเติมในหน้าต่อไป
See addition table in the next page

Model	a	b	Guide	Bush	(Ball Retainer) Type	d	A	B	F	g	T1	T	M x t	S	S1
25SB	100	100	FG (fixed) DG (detachable)	SB (steel) OB (oilfree) NB (no cap ball) MB (movable ball) FB (fixed ball)	BA (Aluminum) BS (Resin)	22	140	160	30	80	30	35	-	-	-
	125						160			100					
	160					28	200	170	35	130	35	40	M10 x 20	135	
	180						220			150					
	200						250			180					
	230						280			210					
	250						300			230					
	300						350			280					
	125	125				28	160	200	35	90	35	40	M10 x 20	80	60
	160						200			130					
	180						220			150					
	200						250			180					
	230						280			210					
	250						300			230					
	300						350			280					
	350					38	420	210	40	340	40	50		175	-
	400						480			400					
	160	160				28	200	230	35	130	35	40	M12 x 25	80	80
	180						220			150					
	200						250			180					
	230						280			210					
	250						300			230					
	300					38	350	240	40	270	40	50		90	70
	350						420			340					
	400						480			400					
	450						550			470					
	180	180				28	220	250	35	150	35	40	M12 x 25	110	110
	200						250			180					
	230						280			210					
	250					38	300	260	40	220	40	50		90	90
	300						350			270					
	350						420			340					
	400						480			400					
	200	200				38	250	280	40	170	40	50	M12 x 25	120	120
	250						300			220					
	300						350			270					
	350						420			340					
	400						480			400					
	450					45	550	300	50	450	45	60		100	100
	500						600			500					

SUN RISE technologies
Tel: +662-324-3184-(89) Fax: +662-324-3190 / +662-324-3103
Website: www.sunrisegr.com Email: sale@sunrisegr.com

Model	a	b	Guide	Bush	(Ball Retainer) Type	d	A	B	F	g	T1	T	M x t	S	S1
25SB	230	230	FG (fixed) DG (detachable)	SB (steel) OB (oilfree) NB (no cap ball) MB (movable ball) FB (fixed ball)	BA (Aluminum) BS (Resin)	38	280	310	40	200	40	50	M12 x 25	140	140
	250						300			220					
	300						350			270					
	350						420			340					
	400					45	480	330	50	380	45	60		120	120
	250	250				38	300	330	40	220	40	50		160	160
	300						350			270					
	350						420			340					
	400					45	480	350	50	380	45	60	M12 x 25	150	150
	450						550			450					
	500						600			500					
	550						650			550					
	300	300				45	350	400	50	250	45	60	M12 x 25	200	200
	350						420			320					
	400						480			380					
	450						550			450					
	500						600			500			M16 x 30		
	550					50	650	410	55	540	50			190	190
	350	350				45	420	450	50	320	45	60	M12 x 25	250	250
	400						480			380					
	450						550			450			M16 x 30		
	500					50	600	460	55	490	50				220
	550						650			540					

บุชเหล็ก
Steel Bush

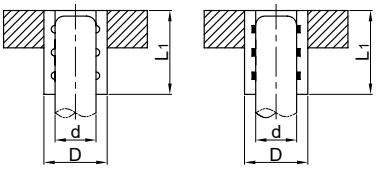

SB OB

บุชปลอกลูกปืน
Ball Retainer Bush

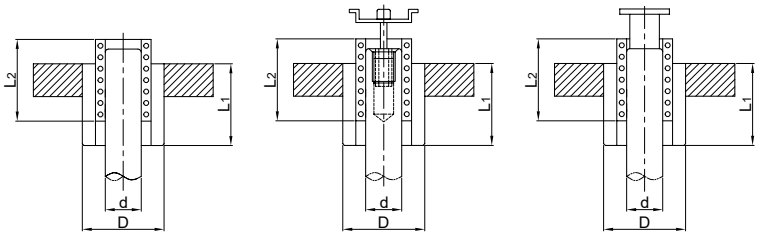

NB MB FB

ORDER EXAMPLE Model a - b - Guide - Bush - (Ball Retainer) - d - L - L1
25SB200-125-DG-OB-28-150-60

เลือกค่าความยาวเสา L และ ความสูงบุช L1
Choose overall guide length L and bush height L1

d	L (10mm increment)	For Steel Bush (SB, OB)		For Ball Retainer Bush (NB, MB, FB)		
		D	L1	D	L1	L2
22	120 - 180	34	50	40	50	50
			60		60	60
28	140 - 200	42	60	50	60	60
			80		80	75
38	180 - 260	54	80	64	80	75
			100		100	90
45	180 - 260	62	100	74	100	90
			120		120	110
50	200 - 260	70	100	83	100	90
			120		120	110

Steel Die Set (SC) - ไดเซ็ตเหล็กเหนียว (SC)

OF OIL FREE™



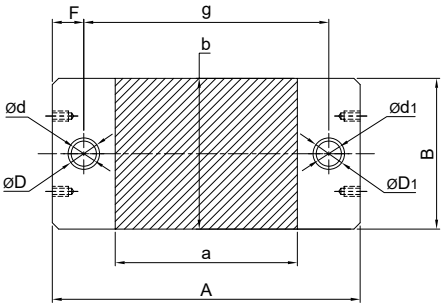

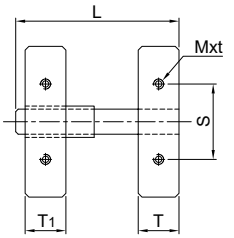

Model: 25SC

ORDER EXAMPLE: Model a - b - Guide - Bush - (Ball Retainer) - d - L - L1

25SC200-125-DG-OB-25-150-60

ดูตารางเพิ่มเติมในหน้าต่อไป
See addition table in the next page

a	b	Guide	Bush	(Ball Retainer) Type	d	d1	A	B	F	g	T1	T	M x t	S
100	100	FG (fixed) DG (detachable)	SB (steel) OB (oilfree) NB (no cap ball) MB (movable ball) FB (fixed ball)	BA (Aluminum) BS (Resin)	20	22	210	100	30	150	30	35	-	-
125							230		30	170				
160					25	28	280		35	210	35	40		
180							300		35	230				
200							320		35	250			M12 x 25	70
230							350		35	280				
250							380		35	310				
300							420		35	350				
125	125				25	28	250	125	35	180	35	40	-	-
160							280		35	210			M12 x 25	80
180							300		35	230				
200							320		35	250				
230							350		35	280				
250							380		35	310				
300							420		35	350				
350							500		40	420	40	50		
400							550		40	470				
160	160				25	28	280	160	35	210	35	40	M12 x 25	90
180							300		35	230				
200							320		35	250				
230							350		35	280				
250							380		35	310				
300					32	38	450		40	370	40	50		
350							500		40	420				
400							550		40	470				
450							600		40	520				
180	180				25	28	300	180	35	230	35	40	M12 x 25	110
200							320		35	250				
230							350		35	280				
250					32	38	400		40	320	40	50		
300							450		40	370				
350							500		40	420				
400							550		40	470				
200	200				32	38	350	200	40	270	40	50	M12 x 25	120
250							400		40	320				
300							450		40	370				
350							500		40	420				
400							550		40	470				
450					38	45	650		50	550	45	60		
500							700		50	600				

SUN RISE technologies
Tel: +662-324-3184-(89) Fax: +662-324-3190 / +662-324-3103
Website: www.sunrisegr.com Email: sale@sunrisegr.com

a	b	Guide	Bush	(Ball Retainer) Type	d	d1	A	B	F	g	T1	T	M x t	S
230	230	FG (fixed) DG (detachable)	SB (steel) OB (oilfree) NB (no cap ball) MB (movable ball) FB (fixed ball)	BA (Aluminum) BS (Resin)	32	38	380	230	40	300	40	50	M12 x 25	130
250							400		40	320				
300							450		40	370				
350							500		40	420				
400							600		50	500	45	60		
250	250				32	38	400	250	40	320	40	50	M12 x 25	150
300							450		40	370				
350							500		40	420				
400							600		50	500	45	60		
450							650		50	550				
500							700		50	600				
550							750		50	650				
300	300				38	45	500	300	50	400	45	60	M12 x 25	180
350							550		50	450				
400							600		50	500				
450							650		50	550				
500							700		50	600				
550					45	50	750		55	640	50		M16 x 30	
350	350				38	45	550	350	50	450	45	60	M12 x 25	210
400							600		50	500				
450							650		50	550				
500					45	50	700		55	590	50		M16 x 30	
550							750		55	640				

บุชเหล็ก
Steel Bush

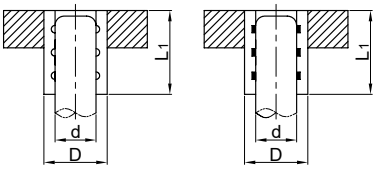

SB OB

บุชปลอกลูกปืน
Ball Retainer Bush

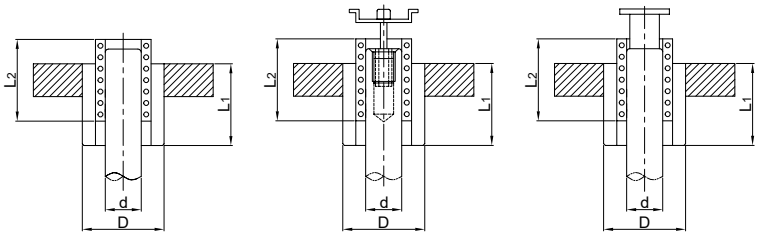

NB MB FB

ORDER EXAMPLE Model a - b - Guide - Bush - (Ball Retainer) - d - L - L1
25SC200-125-DG-OB-25-150-60

เลือกค่าความยาวเสา L และ ความสูงบุช L1
Choose overall guide length L and bush height L1

d	d1	L (10mm increment)	For Steel Bush (SB, OB)			For Ball Retainer Bush (NB, MB, FB)			
			D	D1	L1	DR	DR1	L1	L2
20	22	120 - 180	31	34	50	37	40	50	50
25	28	140 - 180	37	42	60	45	50	60	60
					80			80	75
32	38	180 - 240	46	54	80	55	64	80	75
					100			100	90
38	45	180 - 260	54	62	100	64	74	100	90
45	50	200 - 260	62	70	100	74	83	100	90
					120			120	110

ไดเซ็ต

Steel Die Set (SD) - ไดเซ็ตเหล็กเหนียว (SD)



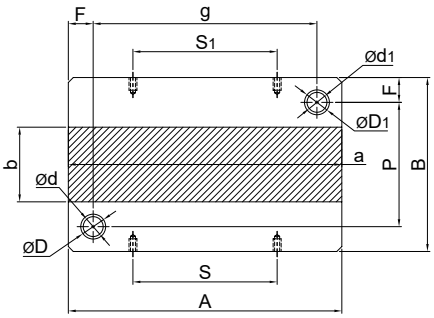

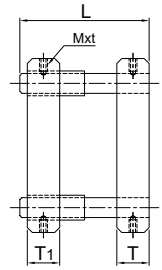

OF OIL FREE™

Model: 25SD

ORDER EXAMPLE | Model a - b - Guide - Bush - (Ball Retainer) - d - L - L1

25SD200-125-DG-OB-25-150-60

ดูตารางเพิ่มเติมในหน้าต่อไป
See addition table in the next page

a	b	Guide	Bush	(Ball Retainer) Type	d	d1	A	B	F	g	P	T1	T	M x t	S	S1
100	100	FG (fixed) DG (detachable)	SB (steel) OB (oilfree) NB (no cap ball) MB (movable ball) FB (fixed ball)	BA (Aluminum) BS (Resin)	20	22	100	210	30	40	150	30	35	-	-	-
125							125			65						
160					25	28	160	220	35	90		35	40	M10 x 20	135	
180							180			110					155	
200							200			130				M12 x 25	80	60
230							230			160					90	90
250							250			180					110	110
300							300			230					160	160
125	125				25	28	125	250	35	55	180	35	40	-	-	-
160							160			90				M10 x 20	135	
180							180			110					155	
200							200			130					80	60
230							230			160				M12 x 25	90	90
250							250			180					110	110
300							300			230					160	160
350					32	38	350	280	40	270	200	40	50		190	190
400							400			320					240	240
160	160				25	28	160	280	35	90	210	35	40	M10 x 20	135	-
180							180			110					155	
200							200			130					80	60
230							230			160				M12 x 25	90	90
250							250			180					110	110
300					32	38	300	310	40	220	230	40	50		140	140
350							350			270					190	190
400							400			320					240	240
450							450			370					270	270
180	180				25	28	180	310	35	110	240	35	40	M10 x 20	155	-
200							200			130					80	60
230							230			160				M12 x 25	90	90
250					32	38	250	330	40	170	250	40	50		90	90
300							300			220					140	140
350							350			270					190	190
400							400			320					240	240
200	200				32	38	200	350	40	120	270	40	50	M10 x 20	175	-
250							250			170				M12 x 25	90	90
300							300			220					140	140
350							350			270					190	190
400							400			320					240	240
450					38	45	450	380	50	350	280	45	60		250	250
500							500			400					300	300

SUN RISE technologies
Tel: +662-324-3184-(89) Fax: +662-324-3190 / +662-324-3103
Website: www.sunrisegr.com Email: sale@sunrisegr.com

a	b	Guide	Bush	(Ball Retainer) Type	d	d1	A	B	F	g	P	T1	T	M x t	S	S1
230	230	FG (fixed) DG (detachable)	SB (steel) OB (oilfree) NB (no cap ball) MB (movable ball) FB (fixed ball)	BA (Aluminum) BS (Resin)	32	38	230	380	40	150	300	40	50	M12 x 25	90	70
250							250			170					90	90
300							300			220					140	140
350							350			270					190	190
400					38	45	400	420	50	300	320	45	60		200	200
250	250				32	38	250	400	40	170	320	40	50	M12 x 25	90	90
300							300			220					140	140
350							350			270					190	190
400					38	45	400	450	50	300	350	45	60		200	200
450							450			350					250	250
500							500			400					300	300
550							550			450				M16 x 30	330	330
300	300				38	45	300	480	50	200	380	45	60	M12 x 25	100	100
350							350			250					150	150
400							400			300					200	200
450							450			350					250	250
500							500			400				M16 x 30	300	300
550					45	50	550	500	55	440	390	50			320	320
350	350				38	45	350	550	50	250	450	45	60	M12 x 25	150	150
400							400			300					200	200
450							450			350				M16 x 30	250	250
500					45	50	500		55	390	440	50			270	270
550							550			440					320	320

บุชเหล็ก
Steel Bush

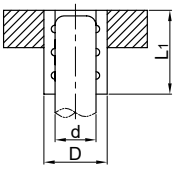

SB

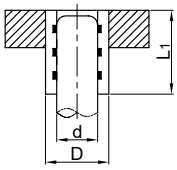

OB

บุชปลอกลูกปืน
Ball Retainer Bush

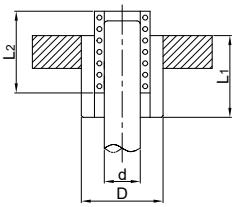

NB

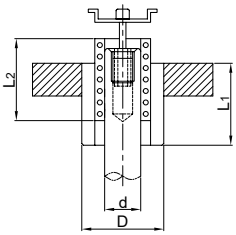

MB

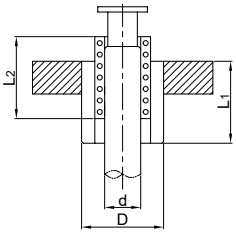

FB

ORDER EXAMPLE Model a - b - Guide - Bush - (Ball Retainer) - d - L - L1

25SD200-125-DG-OB-25-150-60

เลือกค่าความยาวเสา L และ ความสูงบุช L1
Choose overall guide length L and bush height L1

d	d1	L (10mm increment)	For Steel Bush (SB, OB)			For Ball Retainer Bush (NB, MB, FB)			
			D	D1	L1	DR	DR1	L1	L2
20	22	120 - 180	31	34	50	37	40	50	50
25	28	140 - 180	37	42	60	45	50	60	60
					80			80	75
32	38	180 - 240	46	54	80	55	64	80	75
					100			100	90
38	45	180 - 260	54	62	100	64	74	100	90
45	50	200 - 260	62	70	100	74	83	100	90
					120			120	110

ไดเซ็ต

Steel Die Set (SF) - ไดเซ็ตเหล็กเหนียว (SF)

OF OIL FREE™



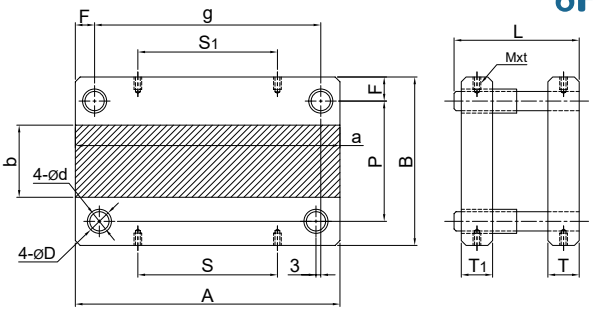

Model: 25SF

ORDER EXAMPLE | Model | a - b - Guide - Bush - (Ball Retainer) - d - L - L1

25SF200-125-DG-OB-25-150-60

ดูตารางเพิ่มเติมในหน้าต่อไป
See addition table in the next page

a	b	Guide	Bush	(Ball Retainer) Type	d	A	B	F	g	P	T1	T	M x t	S	S1
125	100	FG (fixed) DG (detachable)	SB (steel) OB (oilfree) NB (no cap ball) MB (movable ball) FB (fixed ball)	BA (Aluminum) BS (Resin)	20	125	210	30	65	150	30	35	-	-	-
160						160			100				-	-	-
180						180			120				M10 x 20	75	-
200						200			140					75	75
230						230			170					105	105
250					25	250	220	35	180	150	35	40	M12 X 25	110	110
300						300			230					160	160
350						350			280					210	210
400						400			330					240	240
125	125				20	125	230	30	65	170	30	35	M10 x 20	-	-
160						160			100					55	-
180						180			120					75	-
200					25	200	250	35	130	180	35	40	M12 x 25	80	60
230						230			160					90	90
250						250			180					110	110
300						300			230					160	160
350						350			280					210	210
400						400			330					240	240
450						450			380					270	270
500					32	500	280	40	420	200	40	50		300	300
550						550			470					330	330
160	160				25	160	280	35	90	210	35	40	M10 x 20	135	-
180						180			110					155	-
200						200			130					80	60
230						230			160				M12 x 25	90	90
250						250			180					110	110
300						300			230					160	160
350						350			280					210	210
400					32	400	300	40	320	220	40	50		240	240
450						450			370					270	270
500						500			420					300	300
550						550			470					330	330
600						600			520					360	360
180	180				25	180	300	35	110	230	35	40	M10 x 20	155	-
200						200			130					80	60
230						230			160				M12 x 25	90	90
250						250			180					110	110
300						300			230					160	160
350					32	350	320	40	270	240	40	50		190	190
400						400			320					240	240
200	200				25	200	320	35	130	250	35	40	M12 x 25	80	60
250						250			180					110	110
300					32	300	350	40	220	270	40	50		140	140
350						350			270					190	190
400						400			320					240	240
450						450			370					270	270
500						500			420					300	300
550						550			470					330	330
600					38	600	380	50	500	280	45	60		360	360
700						700			600				M16 x 30	420	420

SUN RISE technologies
Tel: +662-324-3184-(89) Fax: +662-324-3190 / +662-324-3103
Website: www.sunrisegr.com Email: sale@sunrisegr.com

a	b	Guide	Bush	(Ball Retainer) Type	d	A	B	F	g	P	T1	T	M x t	S	S1
230	230	FG (fixed) DG (detachable)	SB (steel) OB (oilfree) NB (no cap ball) MB (movable ball) FB (fixed ball)	BA (Aluminum) BS (Resin)	25	230	350	35	160	280	35	40	M12 x 25	90	90
250						250			180					110	110
300					32	300	380	40	220	300	40	50		140	140
350						350			270					190	190
400						400			320					240	240
250	250				32	250	400	40	170	320	40	50	M12 x 25	90	90
300						300			220					140	140
350						350			270					190	190
400						400			320					240	240
450						450			370					270	270
500					38	500	450	50	400	350	45	60		300	300
550						550			450				M16 x 30	330	330
600						600			500					360	360
700						700			600					420	420
300	300				32	300	450	40	220	370	40	50	M12 X 25	140	98
350						350			270					190	114
400					38	400	480	50	300	380	45	60		200	163
450						450			350					250	183
500						500			400					300	203
550						550			450				M16 x 30	330	223
600						600			500					360	242
700						700			600					420	282
800						800			700					480	321
350	350				38	350	550	50	250	450	45	60	M12 x 25	150	164
400						400			300					200	186
450						450			350				M16 x 30	250	209
500						500			400					300	232
550						550			450					330	254
600						600			500					360	277
700					50	700	550	55	590	440	50	60	M20 x 35	420	342
800						800			690					480	389
600	400				50	600	600	55	490	490	50	60	M20 x 35	360	320
700						700			590					420	372
800						800			690					480	424
800	500				50	800	700	55	690	590	50	60	M20 x 35	480	529

บุชเหล็ก Steel Bush

บุชปลอกลูกปืน Ball Retainer Bush

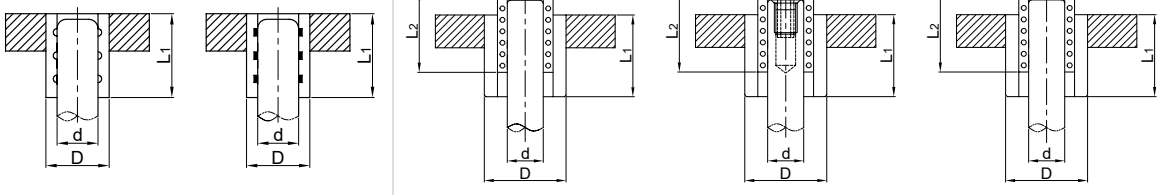

SB OB NB MB FB

ORDER EXAMPLE

Model a - b - Guide - Bush - (Ball Retainer) - d - L - L1

25SF200-125-DG-OB-25-150-60

เลือกค่าความยาวเสา L และ ความสูงบุช L1
Choose overall guide length L and bush height L1

d	L (10mm increment)	For Steel Bush (SB, OB)		For Ball Retainer Bush (NB, MB, FB)		
		D	L1	D	L1	L2
20	100 - 180	31	50	37	50	50
25	120 - 180	37	60	45	60	60
			80		80	75
32	160 - 240	46	80	55	80	75
			100		100	90
38	180 - 260	54	80	64	80	75
			100		100	90
50	200 - 260	70	100	83	100	90
			120		120	110

Press-Fit Ball Guide Post for Die Set - ไกด์โพสลูกปืนสำหรับไดเซ็ต แบบสวมอัด

OIL FREE™

ไม่มีสต๊อปเปอร์ No Stopper | ฝาครอบเลื่อนได้ Movable Stopper | ฝาครอบตายตัว Fixed Stopper

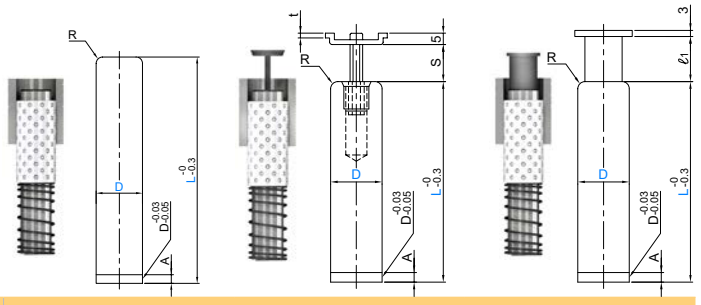

Ball Retainer Material	Model		
Aluminum	25PB	25PM	25PK
Resin	25GB	25GM	25GK

D		A	R	t
20	+0.020 +0.015	4	2.0	1.6
22			3.0	
25				
28	+0.025 +0.020	5	3.5	
32				
38	+0.030 +0.025	6	4.0	2.0
45				
50	+0.035 +0.030	7	5.0	
60				

บุช Bush

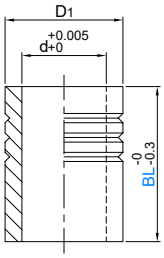

ติดตั้งบุชด้วยกาว ห้ามสวมอัด
Install bush with glue only.
Do not use press-fit method.

d	D1	
26	37	0.000 -0.007
28	40	
31	45	
36	50	
40	55	0.000 -0.008
48	64	
55	74	
60	83	0.000 -0.010
70	95	

ปลอกลูกปืน Ball Retainer

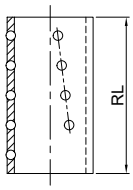

RL	S	L1
50	0 - 19	15
60	0 - 23	20
75	0 - 30	25
90	0 - 37	30
110	0 - 47	35

ดูวิธีคำนวนค่า FL ได้จากหน้า 29
See FL calculation guide on page 29

สปริง Spring

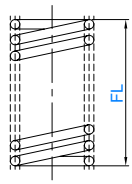

ORDER EXAMPLE Model D - L - BL - FL
25PB25-120-60-100

เลือกโมเดลตามรูปแบบสต๊อปเปอร์และวัสดุปลอกลูกปืน
Choose model from stopper type and Ball Retainers material

D		L													BL	FL 10mm increments	RL
20	+0.020 +0.015	100	110	120	130	140	150	160	170	180					50	40 - 140	50
22				120	130	140	150	160	170	180					50	40 - 140	50
															60		60
25				120	130	140	150	160	170	180					60	40 - 150	60
															80		75
28	+0.025 +0.020					140	150	160	170	180	190	200			60	50 - 150	60
															80		75
32								160	170	180	190	200	220	240	80	70 - 190	75
															100		90
38	+0.030 +0.025									180	190	200	220	240 260	80	80 - 190	75
															100		90
45										180	190	200	220	240 260	100	80 - 190	90
															120		110
50	+0.035 +0.030											200	220	240 260	100	80 - 190	90
															120		110
60												200	220	240 260	100	80 - 190	90
															120		110

SUN RISE technologies
Tel: +662-324-3184-(89) Fax: +662-324-3190 / +662-324-3103
Website: www.sunrisegr.com Email: sale@sunrisegr.com

Removable Ball Guide Post for Die Set - ไกด์โพสลูกปืนสำหรับไดเซ็ต แบบถอดได้

OIL FREE™

ไม่มีสต๊อปเปอร์
No Stopper

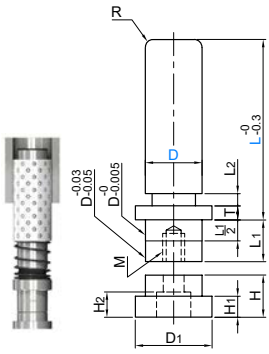

ฝาครอบเลื่อนได้
Movable Stopper

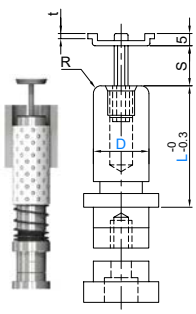

ฝาครอบตายตัว
Fixed Stopper

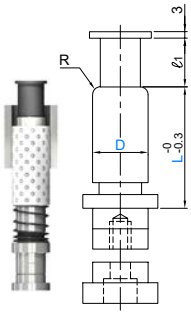

D		D1	L1	L2	H	H1	H2
20	+0.020 +0.015	28	15	10	14	7	8.5
22		30	16				
25		35	18				
28	+0.025 +0.020	36	20	12	16	8	10.5
32		40	23				
38	+0.030 +0.025	49	27		18	10	12.5
45		55	32				
50	+0.035 +0.030	62	35	15	20	12	14.5
60		72	42				

Ball Retainer Material	Model		
Aluminum	25RB	25RM	25RK
Resin	25QB	25QM	25QK

D		T	t	M	R	Bolt
20	+0.020 +0.015	5	1.6	8x18	2.0	24CB8x25
22		8			3.0	
25						
28	+0.025 +0.020	10		10x22	3.5	24CB10x30
32						
38	+0.030 +0.025	12	2.0	12x27	4.0	24CB12x35
45						
50	+0.035 +0.030	15		14x31	4.5	24CB14x40
60						

บุช
Bush

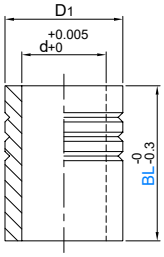

ติดตั้งบุชด้วยกาว ห้ามสวมอัด
Install bush with glue only.
Do not use press-fit method.

d	D1	
26	37	0.000 -0.007
28	40	
31	45	
36	50	
40	55	0.000 -0.008
48	64	
55	74	
60	83	0.000 -0.010
70	95	

ปลอกลูกปืน
Ball Retainer

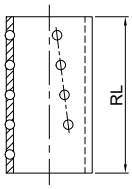

RL	S	L1
50	0 - 19	15
60	0 - 23	20
75	0 - 30	25
90	0 - 37	30
110	0 - 47	35

ดูวิธีคำนวนค่า FL ได้จากหน้า 29
See FL calculation guide on page 29

สปริง
Spring

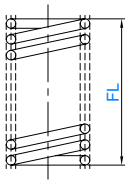

ORDER EXAMPLE

Model	D	-	L	-	BL	-	FL
25RB	25	-	100	-	60	-	100

เลือกโมเดลตามรูปแบบสต๊อปเปอร์และวัสดุปลอกลูกปืน
Choose model from stopper type and Ball Retainers material

D		L											BL	FL 10mm increments	RL
20	+0.020 +0.015	80	90	100	110	120							50	40 - 140	50
22		80	90	100	110	120							50	40 - 140	50
													60		60
25		80	90	100	110	120	130						60	40 - 150	60
													80		75
28	+0.025 +0.020			100	110	120	130	140	150	160			60	50 - 150	60
													80		75
32						120	130	140	150	160			80	70 - 190	75
													100		90
38	+0.030 +0.025							140	150	160	170	180	80	80 - 190	75
													100		90
45								140	150	160	170	180	100	80 - 190	90
													120		110
50	+0.035 +0.030									160	170	180	100	80 - 190	90
													120		110
60										160	170	180	100	80 - 190	90
													120		110

Press-Fit Guide Post for Die Set - ไกด์โพสสำหรับไดเซ็ต แบบสวมอัด

OIL FREE™

บุชร่องน้ำมัน
Oil Groove Bush
Model: 25PD



บุชออยฟรี
Oil Free™ Bush
Model: 25PZ



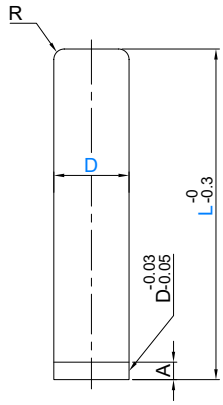

ไกด์ | Guide

D		A	R
20	+0.020 +0.015	4	2.0
22			3.0
25			
28	+0.025 +0.020	5	3.5
32			
38	+0.030 +0.025	6	4.0
45			
50	+0.035 +0.030	7	4.5
60			

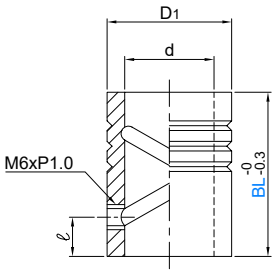

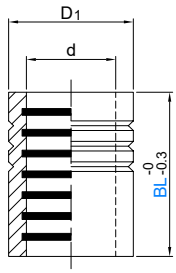

บุช | Bush

L1	d	D1	
10	20	31	0.000 -0.007
	22	34	
	25	37	
	28	42	
15	32	46	0.000 -0.008
	38	54	
	45	62	
	50	70	
	60	80	0.000 -0.010

ORDER EXAMPLE Model D - L - BL
25PD25-120-60

ติดตั้งบุชด้วยกาว ห้ามสวมอัด
Install bush with glue only. Do not use press-fit method.

Model	D		L											BL
25PD 25PZ	20	+0.020 +0.015	100	110	120	130	140	150	160	170	180			50
	22				120	130	140	150	160	170	180			50
														60
	25				120	130	140	150	160	170	180			60
														80
	28	+0.025 +0.020					140	150	160	170	180	190	200	60
														80
	32								160	170	180	190	200	80
												220	240	100
	38	+0.030 +0.025									180	190	200	80
												220	240	260
														100
	45										180	190	200	100
												220	240	260
														120
	50	+0.035 +0.030											200	100
												220	240	260
														120
	60												200	100
												220	240	260
														120

SUN RISE technologies
Tel: +662-324-3184-(89) Fax: +662-324-3190 / +662-324-3103
Website: www.sunrisegr.com Email: sale@sunrisegr.com

Removable Guide Post for Die Set - ไกด์โพสสำหรับไดเซ็ต แบบถอดได้

OIL FREE™

บุชร่องน้ำมัน
Oil Groove Bush
Model: 25RD



บุชออยฟรี
Oil Free™ Bush
Model: 25RZ



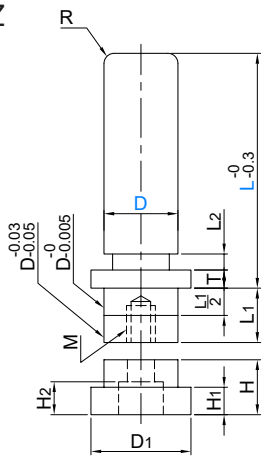

ไกด์ | Guide

D		D1	L1	L2	H	H1	H2
20	+0.020 +0.015	28	15	10	14	7	8.5
22		30	16				
25		35	18				
28	+0.025 +0.020	36	20	12	16	8	10.5
32		40	23				
38	+0.030 +0.025	49	27		18	10	12.5
45		55	32				
50	+0.035 +0.030	62	35	15	20	12	14.5
60		72	42				

D	T	t	M	R	Bolt
20	5	1.6	8x18	2.0	24CB8x25
22	8			3.0	
25					
28	10		10x22	3.5	24CB10x30
32					
38	12	2.0	12x27	4.0	24CB12x35
45					
50	15		14x31	4.5	24CB14x40
60					

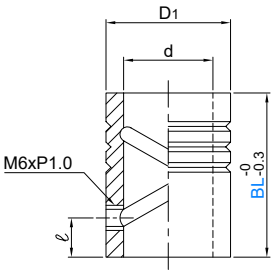

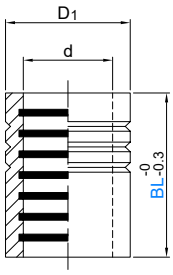

บุช | Bush

L1	d	D1	
10	20	31	0.000 -0.007
	22	34	
	25	37	
	28	42	
15	32	46	0.000 -0.008
	38	54	
	45	62	
	50	70	
	60	80	0.000 -0.010

ORDER EXAMPLE Model D - L - BL
25RD25-120-60

ติดตั้งบุชด้วยกาว ห้ามสวมอัด
Install bush with glue only. Do not use press-fit method.

Model	D		L										BL
25RD 25RZ	20	+0.020 +0.015	80	90	100	110	120						50
	22		80	90	100	110	120						50
													60
	25		80	90	100	110	120	130					60
													80
	28	+0.025 +0.020			100	110	120	130	140	150	160		60
													80
	32						120	130	140	150	160		80
													100
	38	+0.030 +0.025							140	150	160	170	180		80
															100
	45								140	150	160	170	180		100
															120
	50	+0.035 +0.030									160	170	180	200	100
															120
	60										160	170	180	200	100
															120

รีเทนเนอร์
RETAINERS

				
Name	Retainer Backing Plate	End Retainers	Heavy Load End Retainers	Triangle End Retainers
Model	25EBP	25ERAN / 25ERFN	25APAN / 25APFN	25DRAN / 25DRFN
Page	89	91	92	93 - 94

			
Name	Square Retainers	Space-Saving End Retainers	Heavy Duty End Retainers
Model	25SRN / 25SFN / 25ASRN / 25ASFN	25TRAN / 25TRFN	25HERAN / 25HERFN / 25HAPAN / 25HAPFN
Page	95	96	97 - 98

			
Name	Heavy Duty Square Retainers	Select Retainer Sets (Air Type)	Compact Select Retainer Sets (Air Type)
Model	25HSRN / 25HSFN / 25HASRN / 25HASFN	25SLS	25SLC
Page	99	100	101

			
Name	Heavy Load Select Retainer Sets (Air Type)	Select Retainer Sets (Manual Type)	Punch Stripper Unit
Model	25SLA (A)	25SLA (H)	25PSUA / 25PSUB / 25PSUE / 25PSUR
Page	102	103	104

Retainer Backing Plate - แผ่นรองรีเทนเนอร์



OIL FREE™

สำหรับรีเทนเนอร์ที่ใช้กับพั้นช์
For punch retainer type

SCM440
56-60HRC

ORDER EXAMPLE: Model No. - T
25EBP20-10

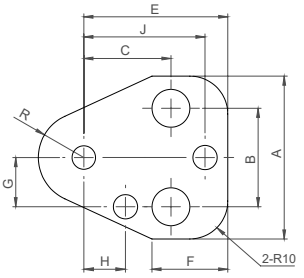

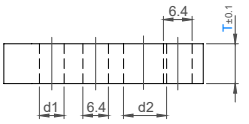

Model	No.	T	A	B	C	E	F	G	H	J	R	d1	d2
25EBP	10	6 7 8 9 10	37	20	21	35	20	10	9	29	9.5	6.2	10
	13		43	26	23	38		13	11	32	12.0		
	16		44	24	26	40			12	34	14.0		12
	20		48	28	27	42		16	14	36	17.0		
	25		50	30	30	46		18	17	39	19.5		
	32		54		33	48		21	20	42	23.0		14
	38		58		35	52		23	23	46	26.0	10.2	
	45		64	34	38	56		26	26	50	29.5		

SUN RISE technologies
Tel: +662-324-3184-(89) Fax: +662-324-3190 / +662-324-3103
Website: www.sunrisegr.com Email: sale@sunrisegr.com

ตารางการเลือกรีเทนเนอร์ | Retainer selecting chart

Type	Punch Type				Thickness	Page
	Round Punch		Shape Punch			
End Retainers (2 Bolts)	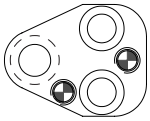	25ERAN	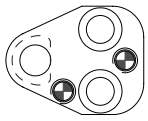	25ERFN	30	P. 91
Heavy Load End Retainers (2 Bolts)		25APAN		25APFN	30	P. 92
Triangle End Retainers	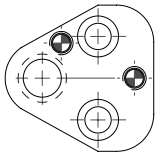	25DRAN25	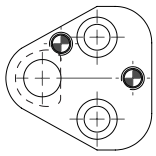	25DRFN25	25	P. 93
		25DRAN32		25DRFN32	32	P. 94
Square Retainers	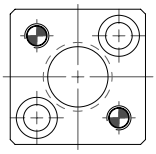	25SRN	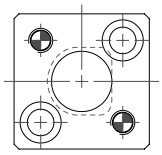	25SFN	30	P. 95
Square Retainers (Heavy-Load Punch)		25ASRN		25ASFN	30	P. 95
Space-Saving End Retainers (1 Bolt)	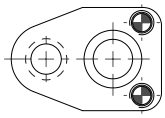	25TRAN	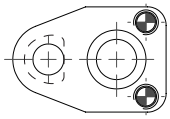	25TRFN	25	P. 96
Heavy Duty End Retainers (2 Bolts)	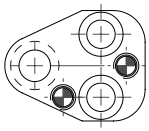	25HERAN	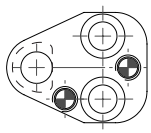	25HERFN	30	P. 97
		25HAPAN		25HAPFN	35	P. 98
Heavy Duty Square Retainers	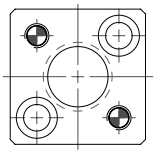	25HSRN	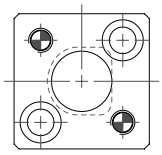	25HSFN	30	P. 99
Heavy Duty Square Retainers (Heavy-Load Punch)		25HASRN		25HASFN	35	P. 99

รีเทนเนอร์

End Retainers - เอ็นรีเทนเนอร์

OIL FREE™





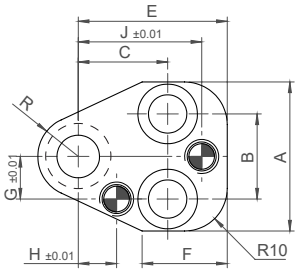

สำหรับพั้นช์กลม
for Round Punch
Model: 25ERAN

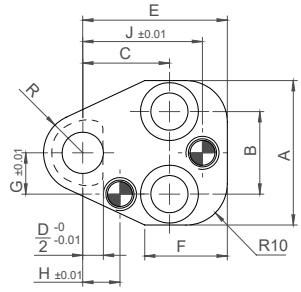

สำหรับพั้นช์รูปร่าง
for Shaped Punch
Model: 25ERFN

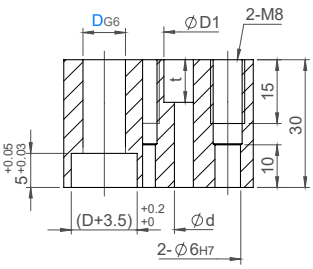

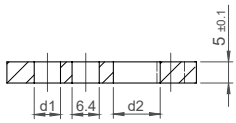

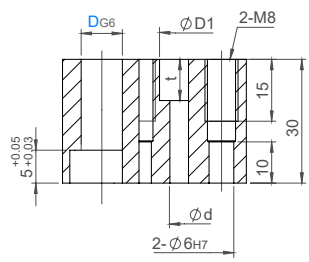

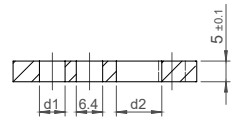





Model		Components			
Round	Shape	①	② Punch	② Die	③
25ERAN	25ERFN	✓			
25ERAN-P	25ERFN-P	✓	✓		
25ERAN-D	25ERFN-D	✓		✓	
25ERAN-S	25ERFN-S	✓			✓
25ERAN-PS	25ERFN-PS	✓	✓		✓
25ERAN-DS	25ERFN-DS	✓		✓	✓

ORDER EXAMPLE Model D: 25ERAN13

① (M) S45C
รมดำ / Black Oxide (Fe3O4)

② (M) SCM440
56-60HRC

③ (i) สกรูหกเหลี่ยมหัวจม, สกรูปลั๊ก, โดเวลพิน
Hexagon Head Bolt, Screw Plugs, Dowel Pins

D G6		A	B	C	E	F	G	H	J	R	D1	d	t	d2	d1		Components		
															Punch	Die	Socket Cap Screw	Plug Screw	Dowel Pin
10	+0.014 +0.005	37	20	21	35	20	10	9	29	9.5	14	9	10	10	6.2	7.4	24CB8x40	M8	25SDTM06-30
13	+0.017 +0.006	43	26	23	38		13	11	32	12						9.4			
16		44	24	26	40			12	34	14	17	11	12	12		11.6	24CB10x40		
20	+0.020 +0.007	48	28	27	42		16	14	36	17						13.6			
25		50	30	30	46		18	17	39	19.5						17.6			
32	+0.025 +0.009	54	30	33	48		21	20	42	23	19	13	14	14		21.6	24CB12x40		
38		58		35	52		23	23	46	26					10.2	27.6			
45		64	34	38	56		26	27	50	29.5						37.0			

SUN RISE technologies
Tel: +662-324-3184-(89) Fax: +662-324-3190 / +662-324-3103
Website: www.sunrisegr.com Email: sale@sunrisegr.com

Heavy Load End Retainers - เอ็นรีเทนเนอร์ สำหรับงานหนัก

OIL FREE™



สำหรับพั้นช์กลม
for Round Punch
Model: 25APAN

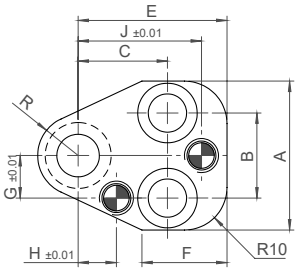

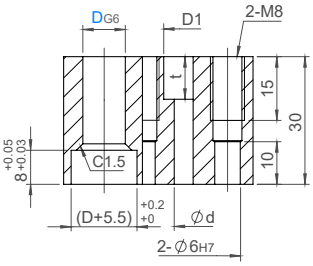

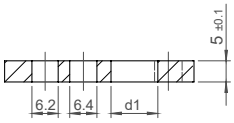



สำหรับพั้นช์รูปร่าง
for Shaped Punch
Model: 25APFN

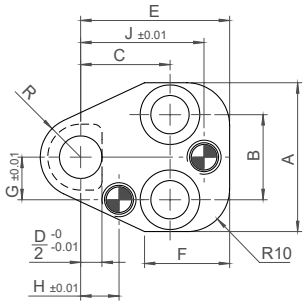

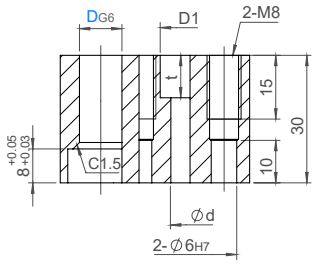

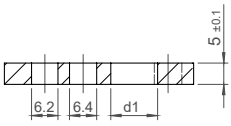





Model		Components		
Round	Shape	①	② Punch	③
25APAN	25APFN	✓		
25APAN-P	25APFN-P	✓	✓	
25APAN-S	25APFN-S	✓		✓
25APAN-PS	25APFN-PS	✓	✓	✓

ORDER EXAMPLE Model D: 25APAN20

① M S45C
รมดำ / Black Oxide (Fe3O4)

② M SCM440
56-60HRC

③ i สกรูหกเหลี่ยมหัวจม, สกรูปลั๊ก, โดเวลพิน
Hexagon Head Bolt, Screw Plugs, Dowel Pins

D G6		A	B	C	E	F	G	H	J	R	D1	d	t	d1	Components		
															Socket Cap Screw	Plug Screw	Dowel Pin
10	+0.014 +0.005	37	20	21	35	20	10	9	29	9.5	14	9	10	10	24CB8x40	M8	25SDTM06-30
13	+0.017 +0.006	43	26	23	38		13	11	32	12							
16		44	24	26	40			12	34	14	17	11	12	12	24CB10x40		
20	+0.020 +0.007	48	28	27	42		16	14	36	17							
25		50	30	30	46		18	17	39	19.5							

Triangle End Retainers (25mm Thickness) - เอ็นรีเทนเนอร์สามเหลี่ยม (สูง 25มม)

OIL FREE™



สำหรับพั้นช์กลม
for Round Punch
Model: 25DRAN25

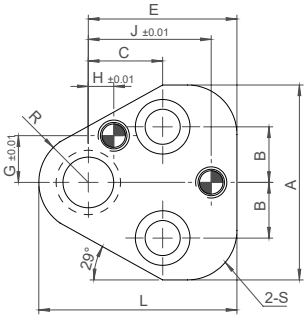

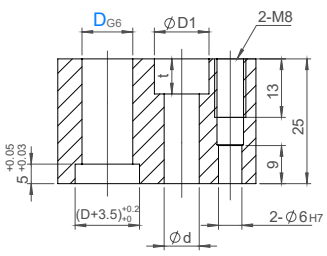





สำหรับพั้นช์รูปร่าง
for Shaped Punch
Model: 25DRFN25

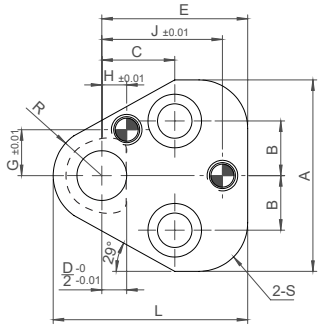

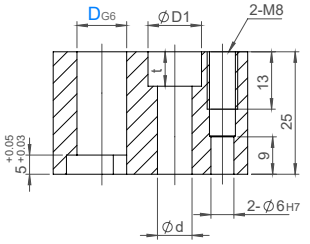

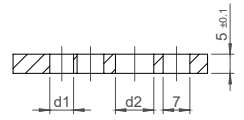





Model		Components			
Round	Shape	①	② Punch	② Die	③
25DRAN25	25DRFN25	✓			
25DRAN25-P	25DRFN25-P	✓	✓		
25DRAN25-D	25DRFN25-D	✓		✓	
25DRAN25-S	25DRFN25-S	✓			✓
25DRAN25-PS	25DRFN25-PS	✓	✓		✓
25DRAN25-DS	25DRFN25-DS	✓		✓	✓

ORDER EXAMPLE Model - D
25DRAN25-20

① M S45C
รมดำ / Black Oxide (Fe3O4)

② M SCM440
56-60HRC

③ i สกรูหกเหลี่ยมหัวจม, สกรูปลั๊ก, โดเวลพิน
Hexagon Head Bolt, Screw Plugs, Dowel Pins

D G6		A	B	C	E	G	H	J	L	R	S	D1	d	t	d2	d1 DBP	d1 DBD	Components: Socket Cap Screw	Components: Plug Screw	Components: Dowel Pin
10	+0.014 +0.005	43.7	11.12	19.05	35.0	9.0	7.5	26.925	44.5	9.5	12.0	14	9	9	10	6.2	7.4	24CB8x35	M8	25SDTM06-30
13	+0.017 +0.006	50.0	14.27		38.1	12.0	6.5	29.970	50.8	12.7	15.2						9.4			
16		53.2	15.87		39.7	13.5	6.0	31.750	54.0	14.3	16.8						11.6			
20	+0.020 +0.007	59.5	17.47		42.8	16.5	5.0	33.530	60.3	17.5	20.0	17	11	11	12		13.6	24CB10x35		
25		69.1	19.84	23.82	47.7	22.0	7.0	40.640	69.9	22.2	24.7	19	13	14	14		17.6	24CB12x35		

SUN RISE technologies
Tel: +662-324-3184-(89) Fax: +662-324-3190 / +662-324-3103
Website: www.sunrisegr.com Email: sale@sunrisegr.com

Triangle End Retainers (32mm Thickness) - เอ็นรีเทนเนอร์สามเหลี่ยม (สูง 32มม)

OF OIL FREE™





สำหรับพั้นช์กลม
for Round Punch
Model: 25DRAN32

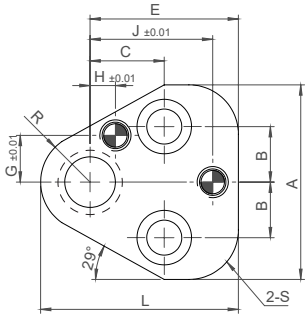

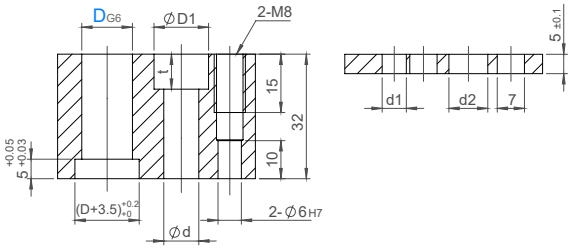

สำหรับพั้นช์รูปร่าง
for Shaped Punch
Model: 25DRFN32

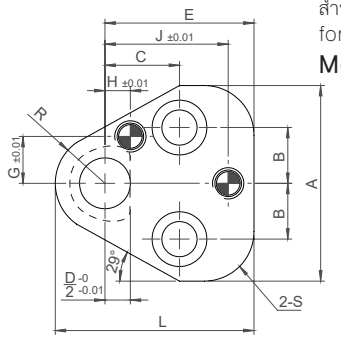

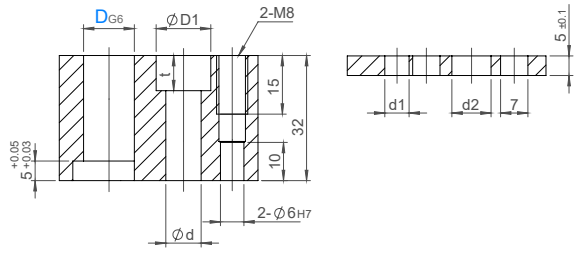





Model		Components			
Round	Shape	①	② Punch	② Die	③
25DRAN32	25DRFN32	✓			
25DRAN32-P	25DRFN32-P	✓	✓		
25DRAN32-D	25DRFN32-D	✓		✓	
25DRAN32-S	25DRFN32-S	✓			✓
25DRAN32-PS	25DRFN32-PS	✓	✓		✓
25DRAN32-DS	25DRFN32-DS	✓		✓	✓

ORDER EXAMPLE Model - D
25DRAN32-20

① Ⓜ S45C
รมดำ / Black Oxide (Fe3O4)

② Ⓜ SCM440
56~60HRC

③ ⓘ สกรูหกเหลี่ยมหัวจม, สกรูปลั๊ก, โดเวลพิน
Hexagon Head Bolt, Screw Plugs, Dowel Pins

D G6		A	B	C	E	G	H	J	L	R	S	D1	d	t	d2	d1		Components		
																DBP	DBD	Socket Cap Screw	Plug Screw	Dowel Pin
10	+0.014 +0.005	43.7	11.12	19.05	35.0	9.0	7.5	26.925	44.5	9.5	12.0	14	9	9	10	6.2	7.4	24CB8x40	M8	25SDTM06-30
13	+0.017 +0.006	50.0	14.27		38.1	12.0	6.5	29.970	50.8	12.7	15.2						9.4			
16		53.2	15.87		39.7	13.5	6.0	31.750	54.0	14.3	16.8						11.6			
20	+0.020 +0.007	59.5	17.47		42.8	16.5	5.0	33.530	60.3	17.5	20.0	17	11	11	12		13.6	24CB10x40		
25		69.1	19.84	23.82	47.7	22.0	7.0	40.640	69.9	22.2	24.7	19	13	14	14		17.6	24CB12x40		

รีเทนเนอร์

Square Retainers - รีเทนเนอร์สี่เหลี่ยม

OF OIL FREE™



สำหรับพั้นช์กลม
for Round Punch
Model: 25SRN

สำหรับพั้นช์กลม *(งานหนัก)*
for Round Punch *(Heavy-Load)*
Model: 25ASRN

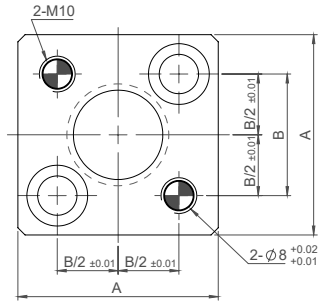

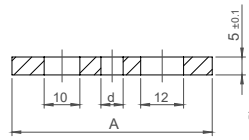

สำหรับพั้นช์งานหนัก
for Heavy-Load Punches

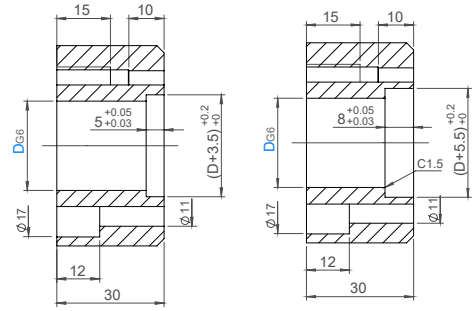

สำหรับพั้นช์รูปร่าง
for Shaped Punch
Model: 25SFN

สำหรับพั้นช์รูปร่าง *(งานหนัก)*
for Shaped Punch *(Heavy-Load)*
Model: 25ASFN

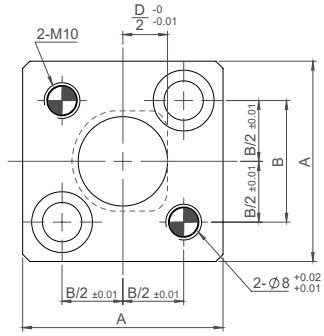

Model				Components			
Round	Round Heavy	Shape	Shape Heavy	①	② Punch	② Die	③
25SRN	25ASRN	25SFN	25ASFN	✓			
25SRN-P	25ASRN-P	25SFN-P	25ASFN-P	✓	✓		
25SRN-D	-	25SFN-D	-	✓		✓	
25SRN-S	25ASRN-S	25SFN-S	25ASFN-S	✓			✓
25SRN-PS	25ASRN-PS	25SFN-PS	25ASFN-PS	✓	✓		✓
25SRN-DS	-	25SFN-DS	-	✓		✓	✓

ORDER EXAMPLE Model D: 25SRN16

① M S45C
รมดำ / Black Oxide (Fe3O4)

② M SCM440
56-60HRC

③ i สกรูหกเหลี่ยมหัวจม, สกรูปลั๊ก, โดเวลพิน
Hexagon Head Bolt, Screw Plugs, Dowel Pins

D G6		A	B	d		Components		
				DBP	DBD	Socket Cap Screw	Plug Screw	Dowel Pin
10	+0.014 +0.005	45	23	6.2	7.4	24CB10x40	M10	25SDTM08-30
13	+0.017 +0.006				9.4			
16		52	30		11.6			
20	+0.020 +0.007				13.6			
25		56	34		17.6			
32	+0.025 +0.009	65	43		21.6			
38				10.2	27.6			

SUN RISE technologies
Tel: +662-324-3184-(89) Fax: +662-324-3190 / +662-324-3103
Website: www.sunrisegr.com Email: sale@sunrisegr.com

Space-Saving End Retainers - เอ็นรีเทนเนอร์ ประหยัดพื้นที่

OIL FREE™





สำหรับพั้นช์กลม
for Round Punch
Model: 25TRAN

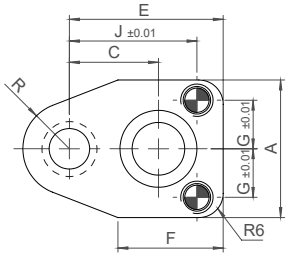

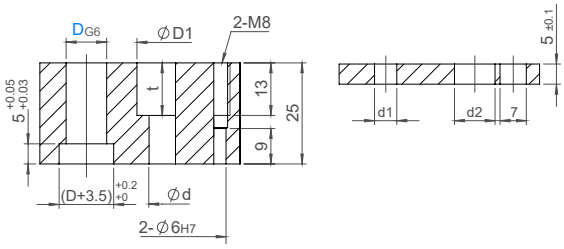

สำหรับพั้นช์รูปร่าง
for Shaped Punch
Model: 25TRFN

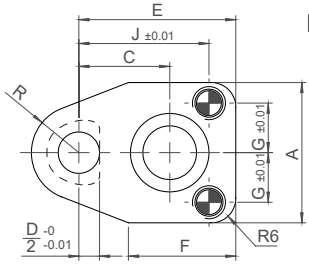

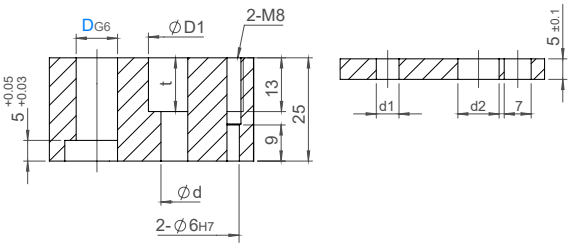





Model		Components			
Round	Shape	①	② Punch	② Die	③
25TRAN	25TRFN	✓			
25TRAN-P	25TRFN-P	✓	✓		
25TRAN-D	25TRFN-D	✓		✓	
25TRAN-S	25TRFN-S	✓			✓
25TRAN-PS	25TRFN-PS	✓	✓		✓
25TRAN-DS	25TRFN-DS	✓		✓	✓

ORDER EXAMPLE Model D — 25TRAN13

① Ⓜ S45C
รมดำ / Black Oxide (Fe3O4)

② Ⓜ SCM440
56-60HRC

③ ⓘ สกรูหกเหลี่ยมหัวจม, สกรูปลั๊ก, โดเวลพิน
Hexagon Head Bolt, Screw Plugs, Dowel Pins

D G6		A	C	E	F	G	J	R	D1	d	t	d1	d2	Components		
														Socket Cap Screw	Plug Screw	Dowel Pin
10	+0.014 +0.005	34	22	38	26	12	31.5	11.5	19	13	13	6.2	14	24CB12x35	M8	25SDTM06-30
13	+0.017 +0.006															
16		36	26	45	33		39	14	25	17	17		18	24CB16x35		

รีเทนเนอร์

Heavy Duty End Retainers (30mm Thickness) - เอ็นรีเทนเนอร์ สำหรับงานหนัก (สูง 30มม)

ใช้ร่วมกับพั้นช์รุ่นโดเวลพิน
For punches with locating dowel pin

OF OIL FREE™



สำหรับพั้นช์กลม
for Round Punch
Model: 25HERAN

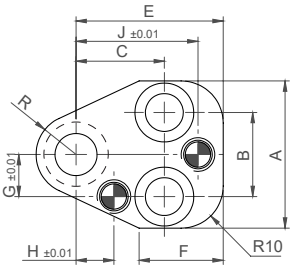

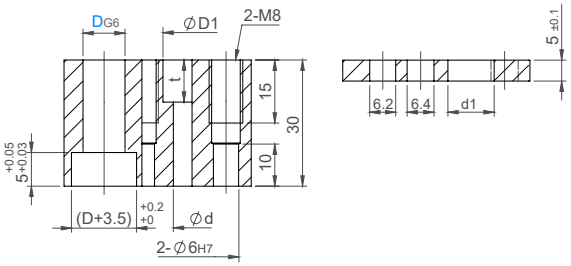



สำหรับพั้นช์รูปร่าง
for Shaped Punch
Model: 25HERFN

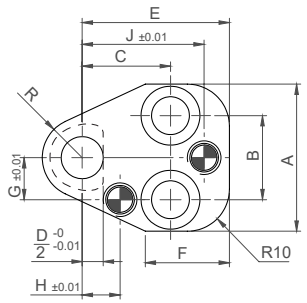

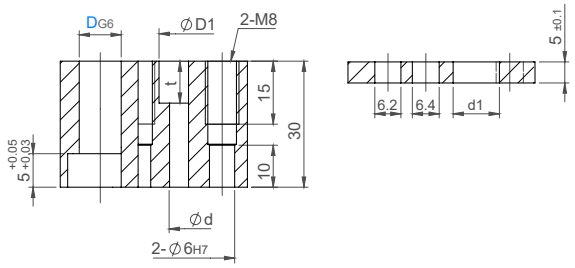





Model		Components			
Round	Shape	①	② Punch	② Die	③
25HERAN	25HERFN	✓			
25HERAN-P	25HERFN-P	✓	✓		
25HERAN-D	25HERFN-D	✓		✓	
25HERAN-S	25HERFN-S	✓			✓
25HERAN-PS	25HERFN-PS	✓	✓		✓
25HERAN-DS	25HERFN-DS	✓		✓	✓

ORDER EXAMPLE: Model D — 25HERAN20

① M SCM440
36~44HRC
รมดำ / Black Oxide (Fe3O4)

② M SCM440
56~60HRC

③ สกรูหกเหลี่ยมหัวจม, สกรูปลั๊ก, โดเวลพิน
Hexagon Head Bolt, Screw Plugs, Dowel Pins

D G6		A	B	C	E	F	G	H	J	R	D1	d	t	d1	Components		
															Socket Cap Screw	Plug Screw	Dowel Pin
10	+0.014 +0.005	37	20	21	35	20	10	9	29	9.5	14	9	10	10	24CB8x40	M8	25SDTM06-30
13	+0.017 +0.006	43	26	23	38		13	11	32	12							
16		44	24	26	40			12	34	14	17	11	12	12	24CB10x40		
20	+0.020 +0.007	48	28	27	42		16	14	36	17							
25		50	30	30	46		18	17	39	19.5							

Retainers

SUN RISE technologies
Tel: +662-324-3184-(89) Fax: +662-324-3190 / +662-324-3103
Website: www.sunrisegr.com Email: sale@sunrisegr.com

Heavy Duty End Retainers (35mm Thickness) - เอ็นรีเทนเนอร์ สำหรับงานหนัก (สูง 35มม)

ใช้ร่วมกับพั้นช์รุ่นใช้งานหนัก
For heavy load punches

OF OIL FREE™



สำหรับพั้นช์กลม
for Round Punch
Model: 25HAPAN

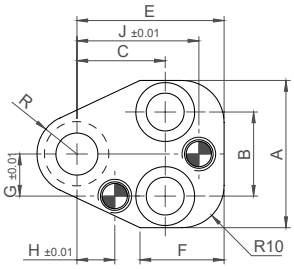

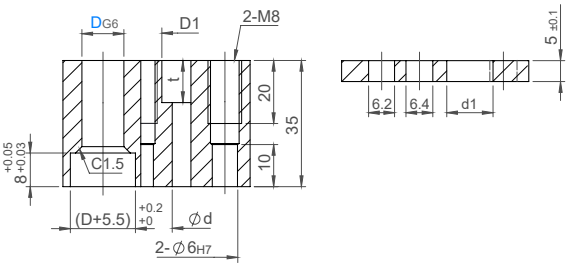



สำหรับพั้นช์รูปร่าง
for Shaped Punch
Model: 25HAPFN

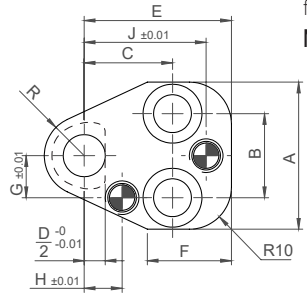

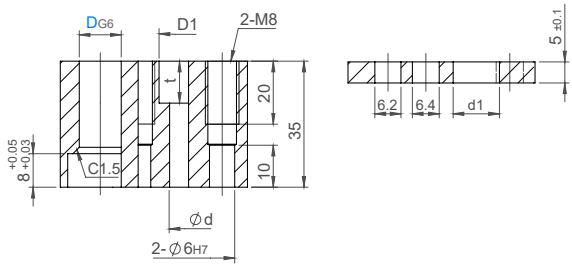





Model		Components		
Round	Shape	①	② Punch	③
25HAPAN	25HAPFN	✓		
25HAPAN-P	25HAPFN-P	✓	✓	
25HAPAN-S	25HAPFN-S	✓		✓
25HAPAN-PS	25HAPFN-PS	✓	✓	✓

ORDER EXAMPLE: Model D — 25HAPAN20

① M SCM440
36-44HRC
รมดำ / Black Oxide (Fe3O4)

② M SCM440
56-60HRC

③ i สกรูหกเหลี่ยมหัวจม, สกรูปลั๊ก, โดเวลพิน
Hexagon Head Bolt, Screw Plugs, Dowel Pins

D G6		A	B	C	E	F	G	H	J	R	D1	d	t	d1	Components		
															Socket Cap Screw	Plug Screw	Dowel Pin
10	+0.014 +0.005	37	20	21	35	20	10	9	29	9.5	14	9	15	10	24CB8x40	M8	25SDTM06-30
13	+0.017 +0.006	43	26	23	38		13	11	32	12							
16		44	24	26	40			12	34	14	17	11	19	12	24CB10x40		
20	+0.020 +0.007	48	28	27	42		16	14	36	17							
25		50	30	30	46		18	17	39	19.5							

Retainers

Heavy Duty Square Retainers - รีเทนเนอร์สีเหลี่ยม สำหรับงานหนัก

OIL FREE™



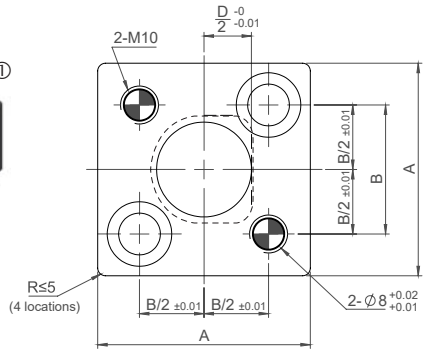

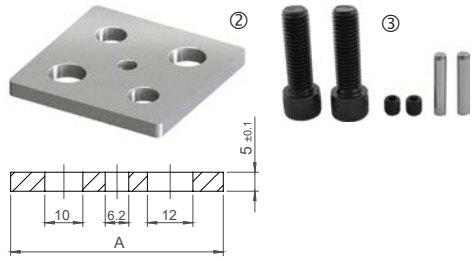

สำหรับพั้นช์กลม
for Round Punch
Model: 25HSRN

สำหรับพั้นช์รูปร่าง
for Shaped Punch
Model: 25HSFN

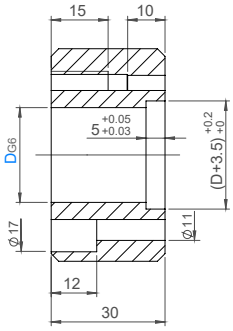

สำหรับพั้นช์งานหนัก
for Heavy-Load Punches
สำหรับพั้นช์กลม
for Round Punch
Model: 25HASRN

สำหรับพั้นช์รูปร่าง
for Shaped Punch
Model: 25HASFN

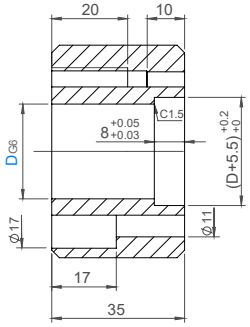

Model				Components			
Round	Round Heavy	Shape	Shape Heavy	①	② Punch	② Die	③
25HSRN	25HASRN	25HSFN	25HASFN	✓			
25HSRN-P	25HASRN-P	25HSFN-P	25HASFN-P	✓	✓		
25HSRN-D	-	25HSFN-D	-	✓		✓	
25HSRN-S	25HASRN-S	25HSFN-S	25HASFN-S	✓			✓
25HSRN-PS	25HASRN-PS	25HSFN-PS	25HASFN-PS	✓	✓		✓
25HSRN-DS	-	25HSFN-DS	-	✓		✓	✓

ORDER EXAMPLE | Model | D | 25HSRN10

① M SCM440
36-44HRC
รมดำ / Black Oxide (Fe3O4)

② M SCM440
56-60HRC

③ i สกรูหกเหลี่ยมหัวจม, สกรูปลั๊ก, โดเวลพิน
Hexagon Head Bolt, Screw Plugs, Dowel Pins

D G6		A	B	Components		
				Socket Cap Screw	Screw	Dowel Pin
10	+0.014 +0.005	45	23	24CB10x40	M10	25SDTM08-30
13	+0.017 +0.006					
16		52	30			
20	+0.020 +0.007					
25		56	34			

SUN RISE technologies
Tel: +662-324-3184-(89) Fax: +662-324-3190 / +662-324-3103
Website: www.sunrisegr.com Email: sale@sunrisegr.com

Select Retainer Sets (Air Type) - ซีเล็ครีเทนเนอร์ (แบบใช้ลม)

OIL FREE™

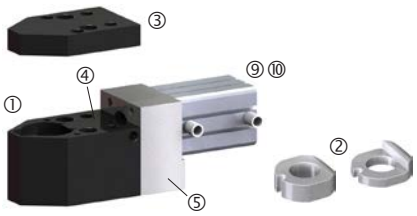

สำหรับพั้นช์กลม
for Round Punch
Model: 25SLS-EA

สำหรับพั้นช์กลม *(มีเซ็นเซอร์)*
for Round Punch *(sensor switch)*
Model: 25SLS-SEA

สำหรับพั้นช์รูปร่าง
for Shaped Punch
Model: 25SLS-FA

สำหรับพั้นช์รูปร่าง *(มีเซ็นเซอร์)*
for Shaped Punch *(sensor switch)*
Model: 25SLS-SFA

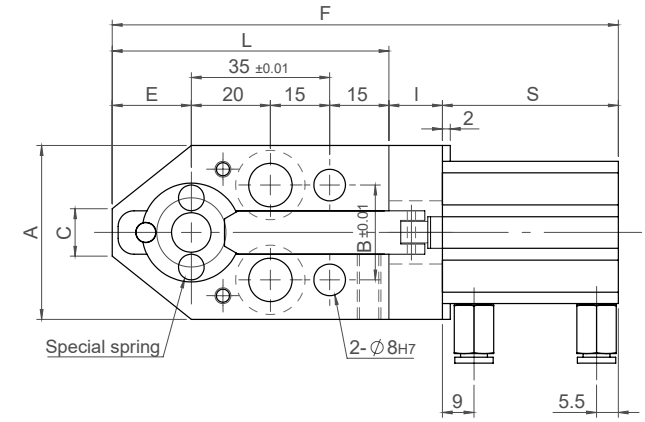

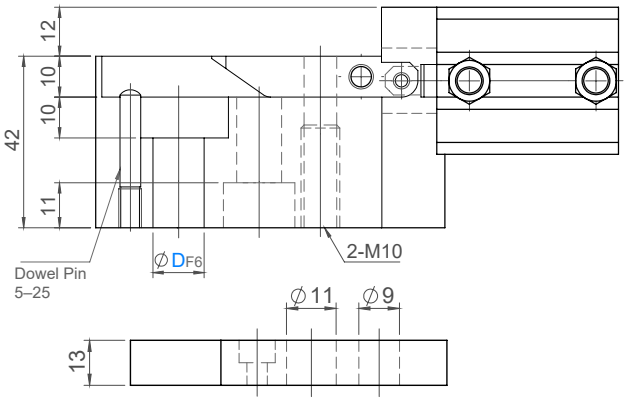

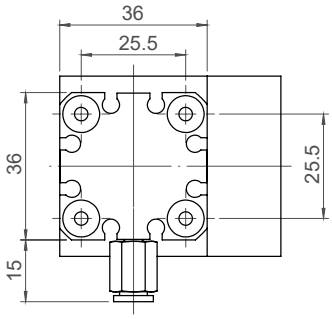

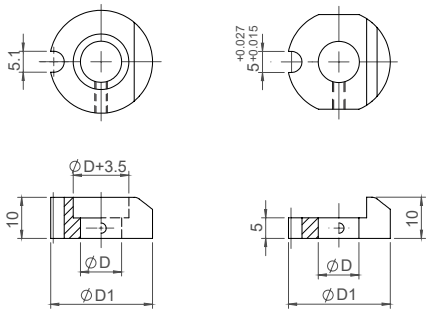

① Ⓜ SCM415
55-58HRC (1mm depth)
รมดำ - Black Oxide (Fe3O4)

②③④ SCM440
56-60HRC

⑤ Ⓜ S45C

⑨⑩ Ⓜ รายละเอียดของกระบอกลม
(SMC : ชุดอุปกรณ์ CQS)
วิธีการทำงาน สองทิศทาง
แรงกดในการทำงาน 0.4~1.0MPa
(4.1~10.2kgf/cm2)
เส้นผ่าศูนย์กลางภายในกระบอกลม Ø 20

⑩ คอนแท็คสวิตช์แบบ 2 แถว
แบบ D-A93L (SMC)
แรงดันไฟฟ้า DC24V / AC100V
ความยาวสายไฟ 3m

ORDER EXAMPLE | Model | D | 25SLS-EA16

มาพร้อมสกรูและโดเวลพินครบเซ็ต
Come complete with screws and dowelpins

Model	D	A	B	C	E	L	I	D1	Without Sensor S	Without Sensor F	With Sensor S	With Sensor F	Components: Socket Cap Screw	Components: Plug Screw	Components: Dowel Pin
25SLS-EA 25SLS-FA 25SLS-SEA 25SLS-SFA	10	44	24	12	20	70	13.5	25	49.5	133	59.5	143	24CB10x60	M10 + M3	25SDTM08-45
	13	48	28	15	23	73	16.5	31		139		149			
	16						21.5		54.5	149	64.5	159			
	20	50	30	20	25	75	28.5	35	59.5	163	69.5	173			
	25	58	38	25	27	77	31.5	40		168		178			
	32	68	48	32	31	81	44.5	47	69.5	195	79.5	205			

Compact Select Retainer Sets (Air Type) - ซีเล็ครีเทนเนอร์ ขนาดกะทัดลัด(แบบใช้ลม)

OF OIL FREE™



สำหรับพั้นช์กลม
for Round Punch
Model: 25SLC-EA

สำหรับพั้นช์กลม *(มีเซ็นเซอร์)*
for Round Punch *(sensor switch)*
Model: 25SLC-SEA

สำหรับพั้นช์รูปร่าง
for Shaped Punch
Model: 25SLC-FA

สำหรับพั้นช์รูปร่าง *(มีเซ็นเซอร์)*
for Shaped Punch *(sensor switch)*
Model: 25SLC-SFA

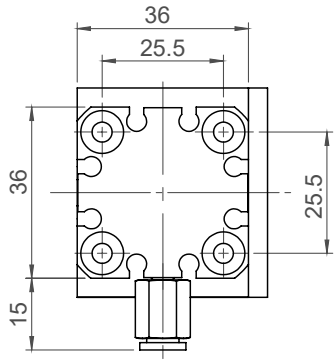

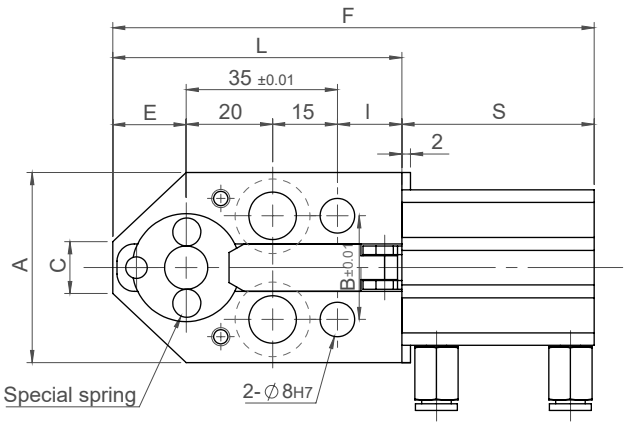

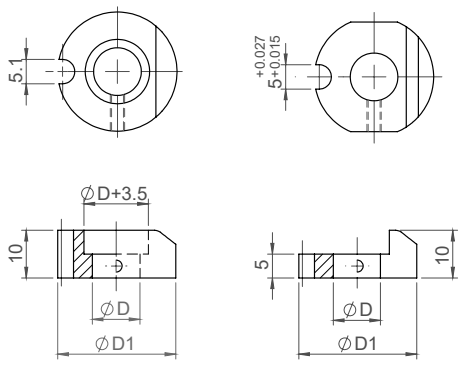

For round punch

For shaped punch

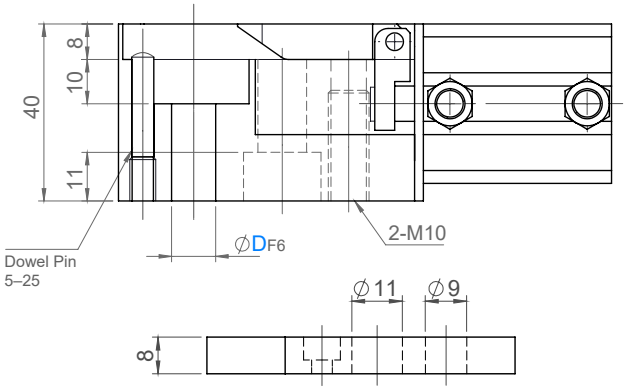

① Ⓜ SCM415
55-58HRC (1mm depth)
รมดำ - Black Oxide (Fe3O4)
②③④ SCM440
56-60HRC

⑧⑨ รายละเอียดของกระบอกลม
(SMC : ชุดอุปกรณ์ CQS)
วิธีการทำงาน สองทิศทาง
แรงกดในการทำงาน 0.4~1.0MPa
(4.1~10.2kgf/cm²)
เส้นผ่าศูนย์กลางภายในกระบอกลม Ø 20

⑨ คอนแท็คสวิตช์แบบ 2 แถว
แบบ D-A93L (SMC)
แรงดันไฟฟ้า DC24V / AC100V
ความยาวสายไฟ 3m

ORDER EXAMPLE Model D — 25SLC-EA16

มาพร้อมสกรูและโดเวลพินครบเซ็ต
Come complete with screws and dowelpins

Model	D	A	B	C	E	L	I	D1	Without Sensor		With Sensor		Component		
									S	F	S	F	Socket Cap Screw	Plug Screw	Dowel Pin
25SLC-EA 25SLC-FA 25SLC-SEA 25SLC-SFA	10	44	24	12	17	67	15	25	44.5	111.5	54.5	121.5	24CB10x55	M10 + M3	25SDTM08-40
	13	48	28	15	17.5	69.5	17	31	44.5	114.0	54.5	124.0			
	16				20	78	23	31	49.5	127.5	59.5	137.5			
	20	50	30	20	22	87	30	35	54.5	141.5	64.5	151.5			

SUN RISE technologies
Tel: +662-324-3184-(89) Fax: +662-324-3190 / +662-324-3103
Website: www.sunrisegr.com Email: sale@sunrisegr.com

Heavy Load Select Retainer Sets (Air Type) - ชีเล็ครีเทนเนอร์ สำหรับงานหนัก (แบบใช้ลม)

OIL FREE™

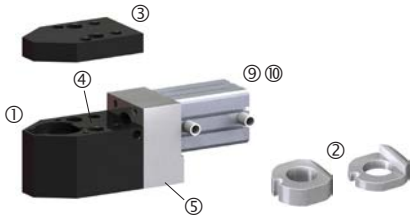

สำหรับพั้นช์กลม
for Round Punch
Model: 25SLA-EA

สำหรับพั้นช์กลม *(มีเซ็นเซอร์)*
for Round Punch *(sensor switch)*
Model: 25SLA-SEA

สำหรับพั้นช์รูปร่าง
for Shaped Punch
Model: 25SLA-FA

สำหรับพั้นช์รูปร่าง *(มีเซ็นเซอร์)*
for Shaped Punch *(sensor switch)*
Model: 25SLA-SFA

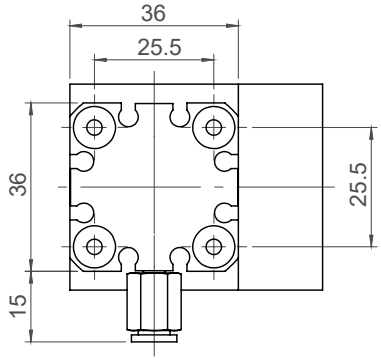

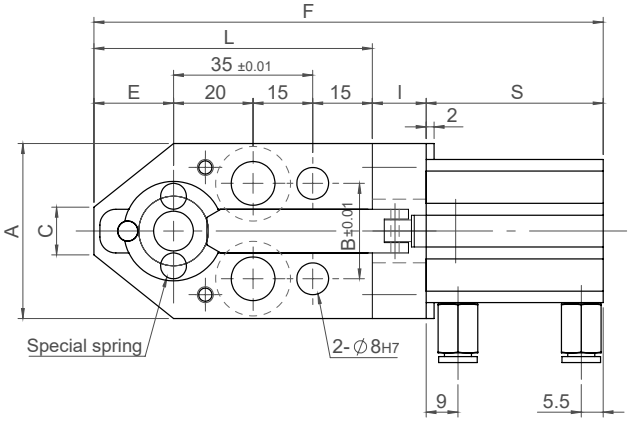

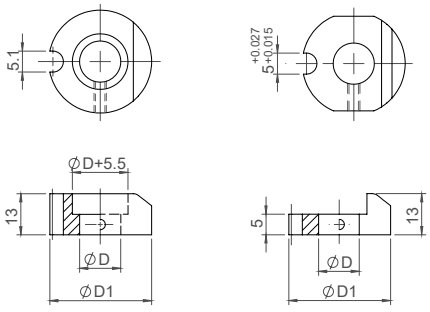

For round punch

For shaped punch

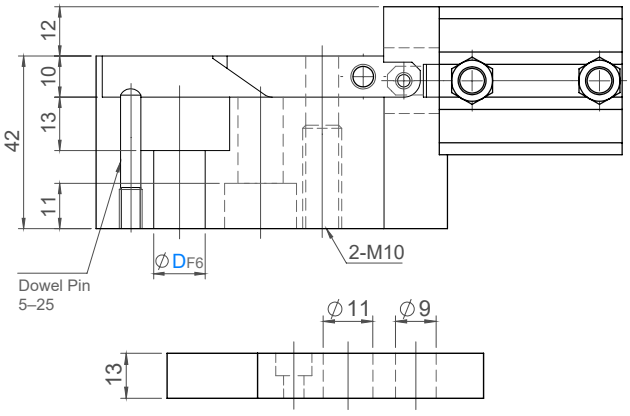

① Ⓜ SCM415
55~58HRC (1mm depth)
รมดำ - Black Oxide (Fe3O4)
②③④ SCM440
56~60HRC
⑤ S45C

⑨⑩ รายละเอียดของกระบอกลม
(SMC : ชุดอุปกรณ์ CQS)
วิธีการทำงาน สองทิศทาง
แรงกดในการทำงาน 0.4~1.0MPa (4.1~10.2kgf/cm²)
เส้นผ่าศูนย์กลางภายในกระบอกลม Ø 20

⑨ คอนแท็คสวิตช์แบบ 2 แถว
แบบ D-A93L (SMC)
แรงดันไฟฟ้า DC24V/AC100V
ความยาวสายไฟ 3m

ORDER EXAMPLE Model D 25SLA-EA16

มาพร้อมสกรูและโดเวลพินครบเซ็ต
Come complete with screws and dowelpins

Model	D	A	B	C	E	L	I	D1	Without Sensor		With Sensor		Component		
									S	F	S	F	Socket Cap Screw	Plug Screw	Dowel Pin
25SLA-EA 25SLA-FA 25SLA-SEA 25SLA-SFA	10	44	24	12	20	70	13.5	25	49.5	133	59.5	143	24CB10x60	M10 + M3	25SDTM08-45
	13	48	28	15	23	73	16.5	31		139		149			
	16						21.5	31	54.5	149	64.5	159			
	20	50	30	20	25	75	28.5	35	59.5	163	69.5	173			

Retainers

รีเทนเนอร์

Select Retainer Sets (Manual Type) - ซีเล็ครีเทนเนอร์ (แบบใช้มือ)

OF OIL FREE™

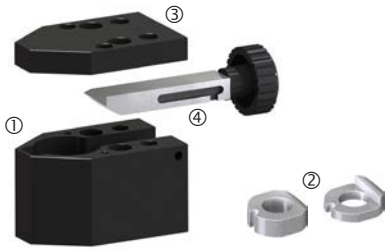

สำหรับพั้นช์กลม
for Round Punch
Model: 25SLA-EH

สำหรับพั้นช์รูปร่าง
for Shaped Punch
Model: 25SLA-FH

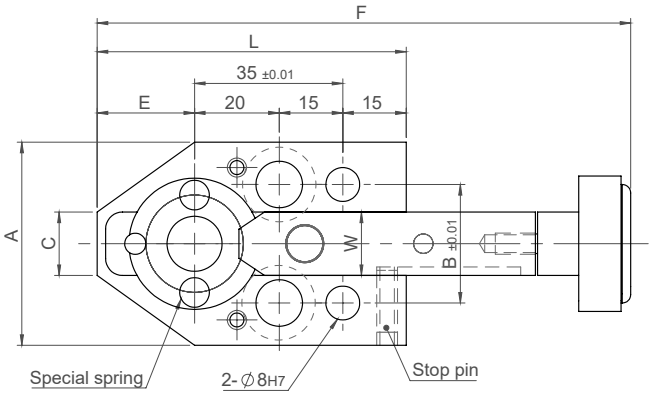

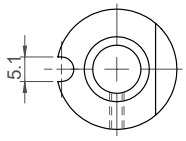

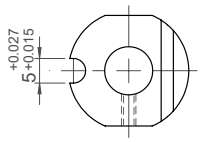

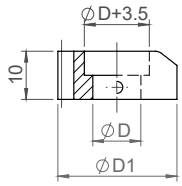

For round punch

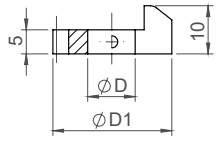

For shaped punch

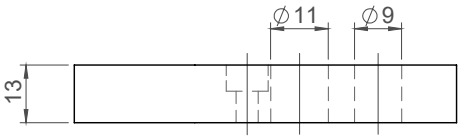

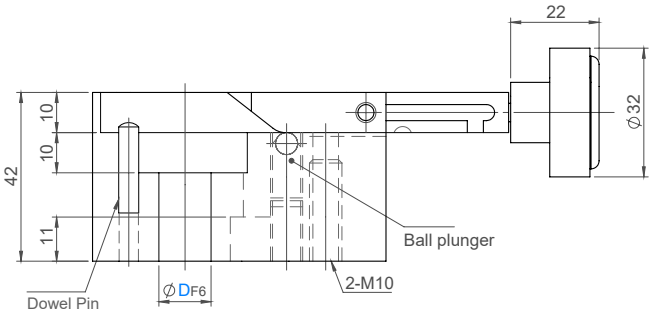

① Ⓜ SCM415
55-58HRC (1mm depth)
รมดำ - Black Oxide (Fe3O4)
②③④ SCM440
56-60HRC

ORDER EXAMPLE Model D 25SLS-EH16

มาพร้อมสกรูและโดเวลพินครบเซ็ต
Come complete with screws and dowelpins

Model	D	A	B	C	E	L	W	D1	F	Component		
										Socket Cap Screw	Plug Screw	Dowel Pin
25SLS-EH 25SLS-FH	10	44	24	12	20	70	11	25	94 - 124	24CB10x60	M10 + M3	25SDTM08-45
	13	48	28	15	23	73	15	31	97 - 127			
	16								97 - 132			
	20	50	30	20	25	75	17	35	99 - 139			
	25	58	38	25	27	77	23	40	101 - 141			
	32	68	48	32	31	81	30	47	105 - 155			

SUN RISE technologies
Tel: +662-324-3184-(89) Fax: +662-324-3190 / +662-324-3103
Website: www.sunrisegr.com Email: sale@sunrisegr.com

Punch Stripper Unit - ชุดพั้นช์สตริปเปอร์

OIL FREE™



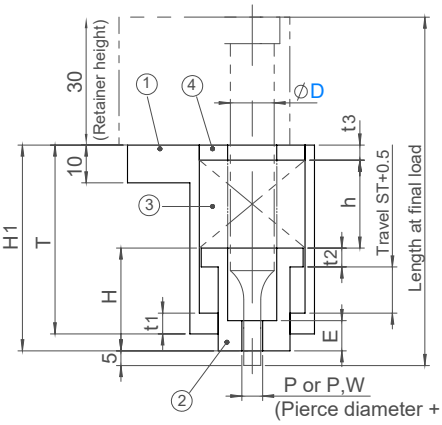

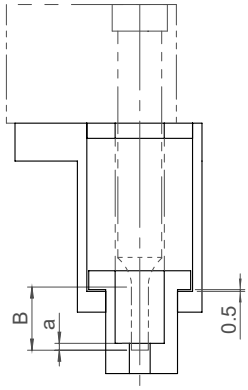

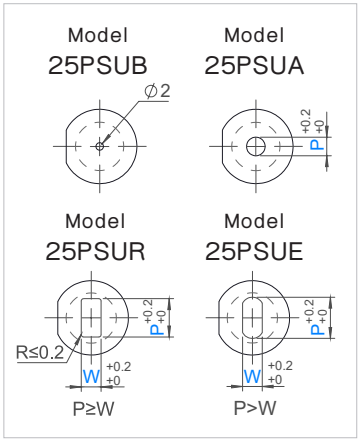

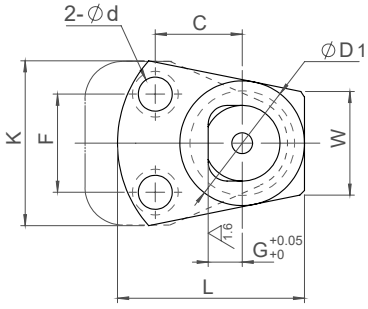

ORDER EXAMPLE Model D - Punch Length - P - W

25PSUA10-80-P8.2

25PSUE13-90-P10-W4.5

Ⓜ ① SS400 รมดำ - Black Oxide
② S45C
③ สปริง - Die Spring
④ SS400

Model	D	Punch Length	25PSUA	25PSUR		25PSUE	
			P 0.1mm increment	P 0.1mm increment	W 0.1mm increment	P 0.1mm increment	W 0.1mm increment
25PSUB	10	80	3.0 - 11.0	3.0 - 8.0	3.0 - 8.0	3.1 - 11.0	3.0 - 10.8
25PSUA		90					
25PSUR	13	80	3.0 - 14.0	3.0 - 10.1	3.0 - 10.1	3.1 - 14.0	3.0 - 13.8
25PSUE		90					
	16	90	3.0 - 17.0	3.0 - 12.3	3.0 - 12.3	3.1 - 17.0	3.0 - 16.8

D	Punch Length	ST	T	t1	H	t2	H1	E	h	t3	C	F	G	D1	K	L	W	d	B	a	Spring	Capped Screw
10	80	12	44	4.5	23	5	45	9	18	4	21	20	9	33	44	49.5	27	9	13	1.5	19SL27-030	24CB8x60
	90	11.2	50	5.5	27.2		55	8	23.8											1.3	19SM27-035	
13	80	12	44	4.5	23		45	9	18		23	26								1.5	19SL27-030	
	90	11.2	50	5.5	27.2		55	8	23.8											1.3	19SM27-035	
16	90	16	53	5	28	4.5	55	13	24	3	26	24	13.5	41	50	60.5	36	11	19	1.5	19SL35-040	24CB10x60

			
Name	Stripper Guide Pins (Headed)	Stripper Guide Pins (Straight)	Stripper Guide Pins (Detachable)
Model	25STPH / 25STOH	25STPN / 25STON	25STGR / 25STOR / 25STPW
Page	107	108	109 - 110

		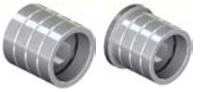	
Name	Stripper Guide Bush (Press-Fit)	Stripper Guide Bushes (Adhesive)	Stripper Guide Bushes (Adhesive)
Model	25SPBA / 25SPBH	25SGTA / 25SGTB	25SGSB / 25SGHB
Page	110	111	111

		
Name	Oil Free™ Stripper Guide Bushes (Press-Fit)	Oil Free™ Stripper Guide Bushes (Press-Fit)
Model	25SGBC / 25SGHC	25SGCC / 25SGFC
Page	112	112

ตารางการเลือกสตริปเปอร์ไกด์ | Stripper Guide selecting chart

Guide Type		Model	Page
Headed Type	Plain		P. 107
	Oil Groove		
Straight Type	Plain		P. 108
	Oil Groove		
Removable Type	Plain		P. 109
	Oil Groove		
2Side-Tapped Removable Type	Plain		P. 110

Bush Type		Model	Page
Press-Fit	Oil Groove		P. 110
Adhesive	Oil Groove		P. 111
	Copper Alloy + Oil Groove		
	Oil Free		P. 112
	Copper Alloy + Oil Free		

การติดตั้งสตริปเปอร์ไกด์บุช | Stripper Guide Bush installation

Fitting Type		Clearance of guide & bush Before installation	Clearance of guide & bush After installation
Press-Fit	Straight	10μ ~ 20μ	2μ ~ 17μ
	Flange	5μ ~ 15μ	2μ ~ 14μ
Adhesive (Loctite No.638)	Straight	2μ ~ 12μ	2μ ~ 12μ
	Flange	2μ ~ 12μ	2μ ~ 12μ

สตริปเปอร์ไกด์ และ บุช

Stripper Guide Pins (Headed Type) - สตริปเปอร์ไกด์พิน (แบบมีบ่า)

OIL FREE™

ไกด์แบบเรียบ
Plain guide
Model: 25STPH

M SUJ2 58HRC-



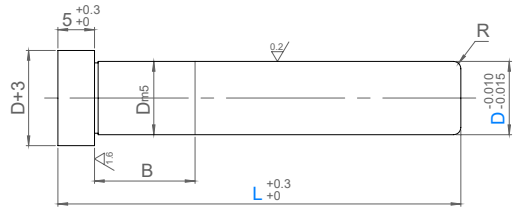

ไกด์มีร่องน้ำมัน
Oil-Grooves guide
Model: 25STOH

M SUJ2 58HRC-



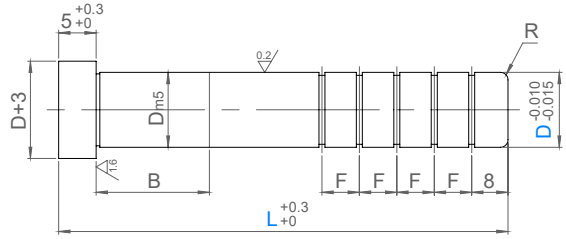

L	40+	50+	70+	80+	90+	120+	160+	180+
No. Grooves	2	3	4	5	6	6	7	8
F	8	8	8	8	8	10	10	10

ORDER EXAMPLE: Model D - L → 25STPH16-100

Model	D m5		L										R	B
25STPH 25STOH	8	+0.012 +0.006	40	50	60	70	80						1.0	10
	10		40	50	60	70	80	90	100					13
	13	+0.015 +0.007	40	50	60	70	80	90	100	110	120		1.5	16
	16			50	60	70	80	90	100	110	120	130	140	20
	20	+0.017 +0.008			60	70	80	90	100	110	120	130	140	25
	25					70	80	90	100	110	120	130	140	28

การปรับแต่งเสริม | Options

OPTION EXAMPLE: Model D - LC - (Others) → 25STPH16-LC95-BC15

Options	Code	Spec.
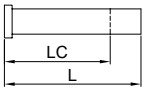	LC	STPH 20 ≤ LC ≤ Lmax STOH 40 ≤ LC ≤ Lmax 0.5mm increment *If LC shorter than standard L then BC is required
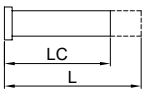	LC	D / Lmax / D / Lmax 8 / 120 / 16 / 200 10 / 150 / 20 / 200 13 / 180 / 25 / 200
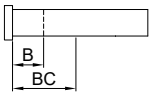	BC	0 ≤ BC ≤ Dx2 1mm increment
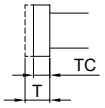	TC	2 ≤ TC < 5 0.1mm increment *L will be shorter by 5-TC if order with LC, L=LC

Options	Code	Spec.
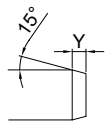	GC	Taper at the tip D / Y 8 / 10 / 13 / 16 / 20 / 25 3 / 5
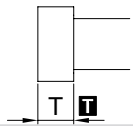	TKC	+0.3 T 0 => +0.02 T 0
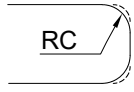	RC	Change R at the tip D / RC 8 / 10 / 13 / 16 / 20 / 25 1.5 , 2.0 / 2.0 , 2.5 / 2.5 , 3.0

SUN RISE technologies
Tel: +662-324-3184-(89) Fax: +662-324-3190 / +662-324-3103
Website: www.sunrisegr.com Email: sale@sunrisegr.com

Stripper Guide Pins (Straight Type) - สตริปเปอร์ไกด์พิน (แบบตรง)

OIL FREE™

ไกด์แบบเรียบ
Plain guide
Model: 25STPN

M SUJ2 58HRC~



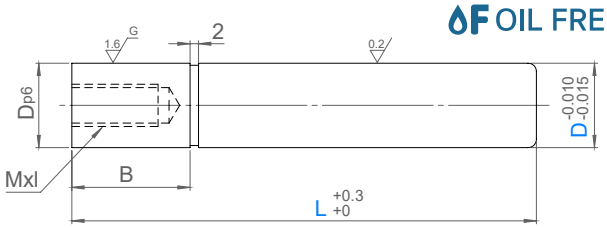

ไกด์มีร่องน้ำมัน
Oil-Grooves guide
Model: 25STON

M SUJ2 58HRC~



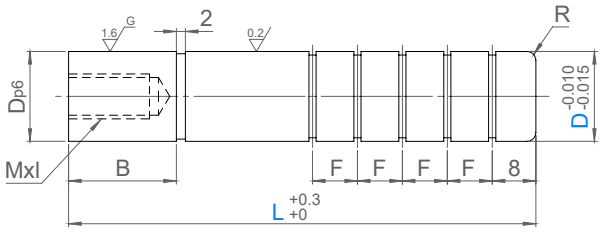

ORDER EXAMPLE Model D - L
25STPN16-100

L	40+	50+	70+	80+	90+	120+	160+	180+
No. Grooves	2	3	4	5	6	6	7	8
F	8	8	8	8	8	10	10	10

Model	D p6		L										R	B	M x I
25STPN 25STON	8	+0.024 +0.015	40	50	60	70	80						1.0	10	M5x12 P0.8
	10		40	50	60	70	80	90	100					13	
	13	+0.029 +0.018	40	50	60	70	80	90	100	110	120		1.5	16	M6x15 P1.0
	16			50	60	70	80	90	100	110	120			20	
	20	+0.035 +0.022			60	70	80	90	100	110	120	130	140	2.0	25	M8x20 P1.25
	25					70	80	90	100	110	120	130	140		28	

การปรับแต่งเสริม | Options

OPTION EXAMPLE Model D - LC - (Others)
25STPN16-LC95-BC15

Options	Code	Spec.
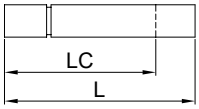 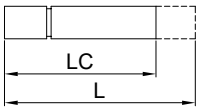	LC	STPN 20 ≤ LC ≤ Lmax STON 40 ≤ LC ≤ Lmax 0.5mm increment *If LC shorter than standard L then BC is required *If LC≤25 then Tapped Hole may go through another side
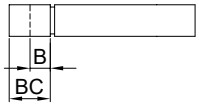	BC	0 ≤ BC ≤ Dx2 1mm increment *If BC=0 then 2mm slot will not exist

D	Lmax	D	Lmax
8	120	16	200
10	150	20	200
13	180	25	200

Options	Code	Spec.
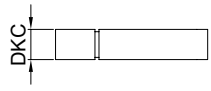	DKC	Change Dp6 to Dm5
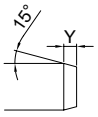	GC	Taper at the tip
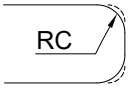	RC	Change R at the tip
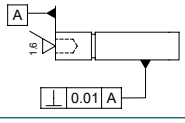	TGC	Tapped End will be polish, the perpendicularity is 0.01

D	Y
8	3
10	
13	5
16	
20	
25	

D	RC
8	1.5 , 2.0
10	
13	2.0 , 2.5
16	
20	2.5 , 3.0
25	

สตริปเปอร์ไกด์ และ บุช

Stripper Guide Pins (Removable Type) - สตริปเปอร์ไกด์พิน (แบบถอดได้)

OIL FREE™

ไกด์แบบเรียบ
Plain guide
Model: 25STGR

M SUJ2 58HRC-



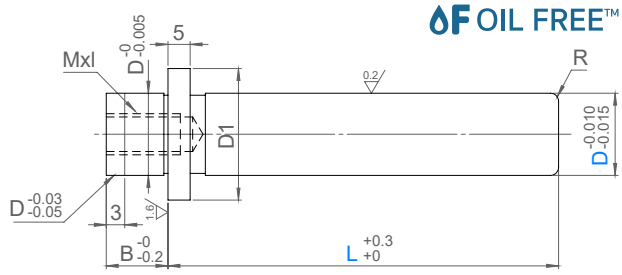

ไกด์มีร่องน้ำมัน
Oil-Grooves guide
Model: 25STOR

M SUJ2 58HRC-



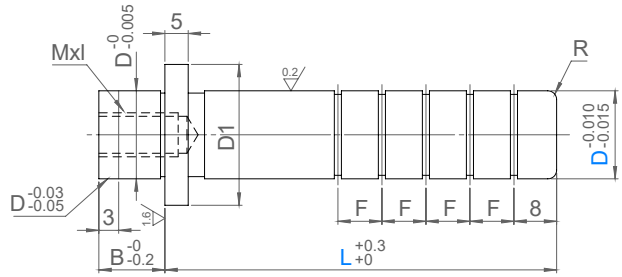

L	40+	50+	70+	80+	90+	120+
No. Grooves	2	3	4	5	6	6
F	8	8	8	8	8	10

ORDER EXAMPLE: Model D - L → 25STGR16-100

Model	D	L										R	B	D1	M x l
25STGR 25STOR	8	30	40	50	60	70						1.0	8	13	M5x12 P0.8
	10	30	40	50	60	70	80							16	
	13		40	50	60	70	80	90	100			1.5	10	20	M6x15 P1.0
	16		40	50	60	70	80	90	100	110	120			23	
	20			50	60	70	80	90	100	110	120	2.0	13	27	M8x20 P1.25
	25				60	70	80	90	100	110	120		16	32	

การปรับแต่งเสริม | Options

OPTION EXAMPLE: Model D - LC - (Others) → 25STGR16-LC95-GC

Options	Code	Spec.
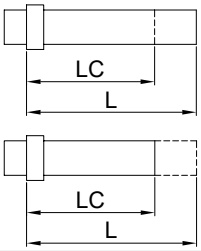	LC	30 ≤ LC ≤ Lmax 0.5mm increment

D	Lmax
8	80
10	100
13	120
16	140
20	140
25	140

Options	Code	Spec.
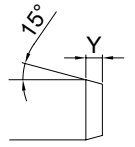	GC	Taper at the tip

D	Y
8	3
10	
13	5
16	
20	
25	

Options	Code	Spec.
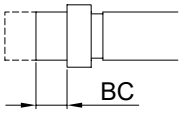	BC	5 ≤ BC < B 1mm increment *Tapped hole will be shorter by B-BC
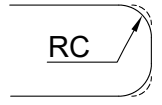	RC	Change R at the tip

D	RC
8	1.5 , 2.0
10	
13	2.0 , 2.5
16	
20	2.5 , 3.0
25	

SUN RISE technologies
Tel: +662-324-3184-(89) Fax: +662-324-3190 / +662-324-3103
Website: www.sunrisegr.com Email: sale@sunrisegr.com

Tapped Stripper Guide Pins (Removable Type) - สตริปเปอร์ไกด์พิน มีรูต๊าปเกลียว (แบบถอดได้)

OIL FREE™



Model: 25STPW

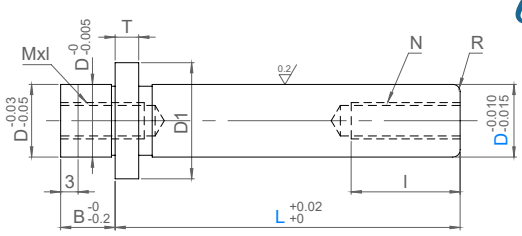

ORDER EXAMPLE: Model D - L → 25STPW20-110

Ⓜ SUJ2 58HRC~

Model	D	L 5mm increment	R	T	B	D1	l	N	M x l
25STPW	8	25 - 70	1.0	3	8	12	8 - 13	M4 P0.7	M4x12 P0.7
	10				10	14			
	13	30 - 75	1.5	5		17	10 - 15	M5 P0.8	M5x12 P0.8
	16	40 - 100				23		M6 P1.0	M6x15 P1.0
	20	60 - 120	2.0		13	27	16 - 21	M8 P1.25	M8x20 P1.25
	25				16	32			

การปรับแต่งเสริม | Options

OPTION EXAMPLE: Model D - LC - BC → 25STPW10-LC54-BC6

Options	Code	Spec.
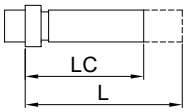	LC	For D = 8-13, 25 ≤ LC < L For D = 16-25, Lmin - 5 ≤ LC < L 0.5mm increment

Options	Code	Spec.
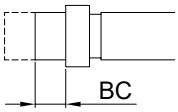	BC	5 ≤ BC < B 1mm increment *Tapped hole will be shorter by B-BC

Stripper Guide Bushes (Press-Fit) - สตริปเปอร์ไกด์บุช (แบบสวมอัด)

OIL FREE™



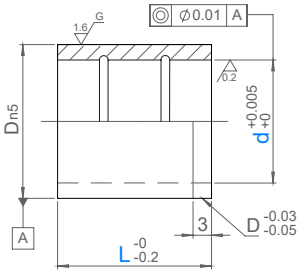

Ⓜ SUJ2 58HRC~

ORDER EXAMPLE: Model d - L → 25SPBA16-25

Model	d	L							D n5	
25SPBA	8	10	13	16	20				12	+0.020 +0.012
	10	10	13	16	20	25			14	
	13		13	16	20	25			18	
	16			16	20	25	30	35	22	+0.024 +0.015
	20				20	25	30	35	25	
	25					25	30	35	32	+0.028 +0.017

Flange Stripper Guide Bushes (Press-Fit) - สตริปเปอร์ไกด์บุชมีบ่า (แบบสวมอัด)

OIL FREE™



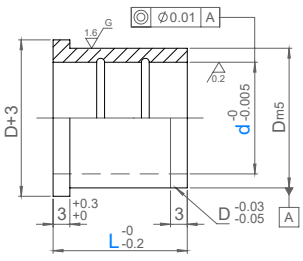

Ⓜ SUJ2 58HRC~

ORDER EXAMPLE: Model d - L → 25SPBH16-25

Model	d	L							D m5	
25SPBH	8	10	13	16	20				12	+0.015 +0.007
	10	10	13	16	20	22	25		14	
	13		13	16	20	22	25	30	35	18
	16		13	16	20	22	25	30	35	22
	20			16	20	22	25	30	35	25
	25				20	22	25	30	35	32

สตริปเปอร์ไกด์ และ บุช

Stripper Guide Bushes (Adhesive) - สตริปเปอร์ไกด์บุช (แบบใช้กาว)

OIL FREE™



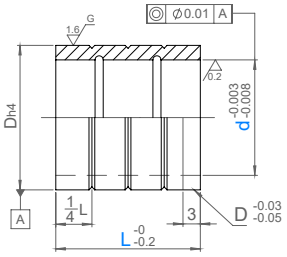

M SUJ2 58HRC~

ORDER EXAMPLE: Model d - L → 25SGTA16-25

Model	d	L								D h4	
25SGTA	8	10	13	16	20					12	0 -0.005
	10	10	13	16	20	22	25			14	
	13		13	16	20	22	25	30	35	18	
	16		13	16	20	22	25	30	35	22	0 -0.006
	20			16	20	22	25	30	35	25	
	25				20	22	25	30	35	32	0. -0.007

Flange Stripper Guide Bushes (Adhesive) - สตริปเปอร์ไกด์บุชมีบ่า (แบบใช้กาว)

OIL FREE™



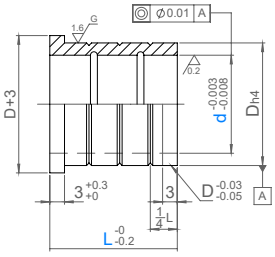

M SUJ2 58HRC~

ORDER EXAMPLE: Model d - L → 25SGTB16-25

Model	d	L								D h4	
25SGTB	8	10	13	16	20					12	0 -0.005
	10	10	13	16	20	22	25			14	
	13		13	16	20	22	25	30	35	18	
	16		13	16	20	22	25	30	35	22	0 -0.006
	20			16	20	22	25	30	35	25	
	25				20	22	25	30	35	32	0. -0.007

Copper Alloy Guide Bushes (Adhesive) - สตริปเปอร์ไกด์บุชทองเหลือง (แบบใช้กาว)

OIL FREE™

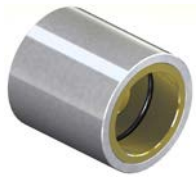

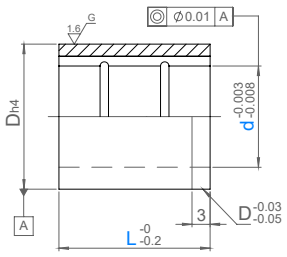

M SUJ2 + Copper Alloy 45HRC

ORDER EXAMPLE: Model d - L → 25SGSB16-25

Model	d	L								D h4	
25SGSB	10	10	13	16	20	22	25			16	0 -0.005
	13		13	16	20	22	25	30		20	0 -0.006
	16			16	20	22	25	30	35	24	
	20			16	20	22	25	30	35	28	
	25				20	22	25	30	35	34	0 -0.007

Flange Copper Alloy Guide Bushes (Adhesive) - สตริปเปอร์ไกด์บุชทองเหลืองมีบ่า (แบบใช้กาว)

OIL FREE™



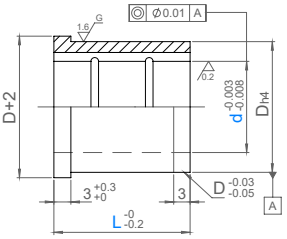

M SUJ2 + Copper Alloy 45HRC

ORDER EXAMPLE: Model d - L → 25SGHB16-25

Model	d	L								D h4	
25SGHB	10	10	13	16	20	22	25			16	0 -0.005
	13		13	16	20	22	25	30		20	0 -0.006
	16			16	20	22	25	30	35	24	
	20			16	20	22	25	30	35	28	
	25				20	22	25	30	35	34	0 -0.007

SUN RISE technologies
Tel: +662-324-3184-(89) Fax: +662-324-3190 / +662-324-3103
Website: www.sunrisegr.com Email: sale@sunrisegr.com

Oil Free Guide Bushes (Adhesive) - ออยฟรี สตริปเปอร์ไกด์บุช (แบบใช้กาว)

OIL FREE™



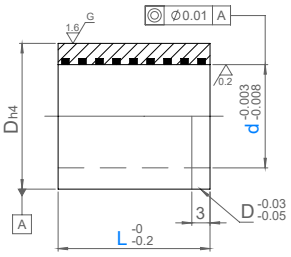

Model	d	L								D h4	
25SGBC	8	10	13	16	20					13	0 -0.005
	10	10	13	16	20	22	25			16	
	13		13	16	20	22	25	30		20	0 -0.006
	16		13	16	20	22	25	30	35	24	
	20			16	20	22	25	30	35	28	
	25				20	22	25	30	35	34	0 -0.007

Ⓜ FC250
Oil Free™ Solid Lubricant

ORDER EXAMPLE: Model d - L → 25SGBC16-25

Flange Oil Free Guide Bushes (Adhesive) - ออยฟรี สตริปเปอร์ไกด์บุชมีบ่า (แบบใช้กาว)

OIL FREE™



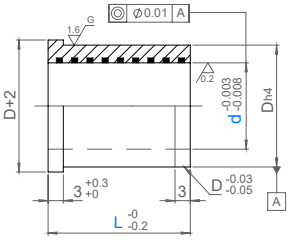

Model	d	L								D h4	
25SGHC	8	10	13	16	20					13	0 -0.005
	10	10	13	16	20	22	25			16	
	13		13	16	20	22	25	30		20	0 -0.006
	16		13	16	20	22	25	30	35	24	
	20			16	20	22	25	30	35	28	
	25				20	22	25	30	35	34	0 -0.007

Ⓜ FC250
Oil Free™ Solid Lubricant

ORDER EXAMPLE: Model d - L → 25SGHC16-25

Oil Free Copper Alloy (Adhesive) - ออยฟรี ไกด์บุชทองเหลือง (แบบใช้กาว)

OIL FREE™

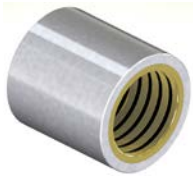

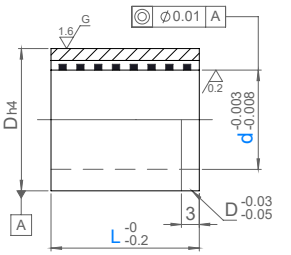

Model	d	L								D h4	
25SGCC	10	10	13	16	20	22	25			16	0 -0.005
	13		13	16	20	22	25	30		20	
	16			16	20	22	25	30	35	24	0 -0.006
	20			16	20	22	25	30	35	28	
	25				20	22	25	30	35	34	0 -0.007

Ⓜ SUJ2 + Copper Alloy
Oil Free™ Solid Lubricant
45HRC

ORDER EXAMPLE: Model d - L → 25SGCC16-25

Flange Oil Free Copper Alloy (Adhesive) - ออยฟรี ไกด์บุชทองเหลืองมีบ่า (แบบใช้กาว)

OIL FREE™



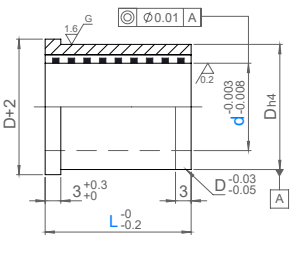

Model	d	L								D h4	
25SGFC	10	10	13	16	20	22	25			16	0 -0.005
	13		13	16	20	22	25	30		20	
	16			16	20	22	25	30	35	24	0 -0.006
	20			16	20	22	25	30	35	28	
	25				20	22	25	30	35	34	0 -0.007

Ⓜ SUJ2 + Copper Alloy
Oil Free™ Solid Lubricant
45HRC

ORDER EXAMPLE: Model d - L → 25SGFC16-25

ชิ้นส่วนหาตำแหน่ง
DIE LOCATING

							
Name	Disappearing Gauge	Disappearing Gauge	Disappearing Gauge	Disappearing Gauge	Disappearing Gauge	Side Gauge	Side Gauge (Cam Type)
Model	25SODA-BT	25SODA-B	25PKDGM	25SODA-RT	25PRDG	25SGAD	25SGCT
Page	115	116	117	118	119	120	121

						
Name	Panel Input Detector Gauge	Panel Input Detector Gauge	Sheet Support Gauge	Sheet Support Gauge	Rough Guides	Nest Guides (Upper Die Relief)
Model	25HKFM	25PADG-B	25SSGNW	25SSGW	25SRG / 25SRG-R / 25SRG-L	25SNGU
Page	122	123	124	125	126	127

				
Name	Nest Guides	Nest Guides (No Dowel Hole)	Configurable Nest Guides	Configurable Nest Guides (Economy)
Model	25SNGN / 25ENGB	25SNGG	25SNGA / 25SNGC	25SNSTA / 25SNSTC / 25STSTD
Page	128	129	130	131

			
Name	Length Configurable Nest Guides	Special Configurable Nest Guides	Nest Guides Blank Parts
Model	25SNGNX / 25SENGX	25SNGW / 25SNGWK / 25SNGWS	25NBB / 25NBBC / 25NBBCL / 25TE(A,B,C,E,L)
Page	132	133	134

		
Name	Nest Guide with Surface Support	Locating Pilot Pins
Model	25SNTFA / 25SNTFB	25SLTL / 25SLPS / 25SNST / 25SDST / 25SDKL / 25SKSTH / 25SFSTH / 25PST / 25PSTM / 25RFPP
Page	135	135 - 139

		
Name	Locating Pilot Punchs	Locating Pins
Model	25RTP / 25T-RTP / 25RTPE / 25T-RTPE	25DIKPA / 25DIKPB / 25DLPA / 25TLPA / 25TLPB / 25TLPC / 25LPU / 25LPL
Page	140	141 - 142

SUN RISE technologies
Tel: +662-324-3184-(89) Fax: +662-324-3190 / +662-324-3103
Website: www.sunrisegr.com Email: sale@sunrisegr.com

				
Name	Locating Pins	Pre-Holding Push Pin Sets	Push Pin Sets (Economy)	Push Pin Sets (Long Stroke)
Model	25IKPD(A,B,C,E)	25S-PAP(-U)	25S-PAP-E(U)	25SD-PAP-(S,U) / 25SD-PAGP-(S,U)
Page	142	143	144	145

			
Name	Push Pin Sets (Lock Mechanism)	Push Pin Sets (Air Hole)	Pushing Pin Sets
Model	25SD-PAP-Z-(S,U)	25SD-PAEA-(S,U)	25S-PSPH / 25S-PSH
Page	146	147	148

			
Name	Push Out Pins	Drawing Jector Pins	Skid Brackets
Model	25POP / 25HPOP	25DHPA / 25DHPF100	25STB / 25STBY / 25MRTB / 25MRTBY
Page	149	149	150

Disappearing Gauge - ดีเอเกจ



รางสไลด์แบบ ออยฟรี
Oil Free™ sliding type

OF OIL FREE™

Model: 25SODA-BT

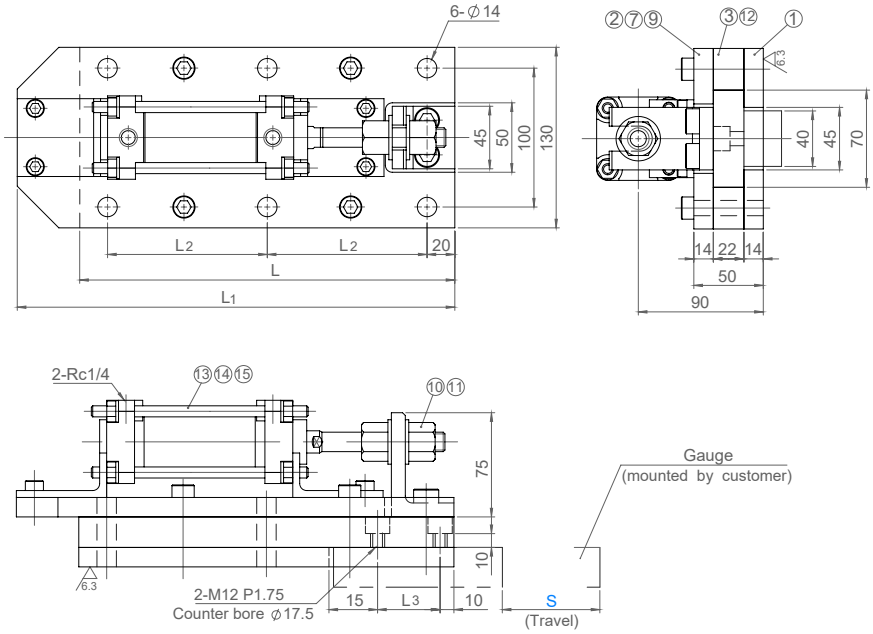

No.	Description	Qty	Material and Remark
1	Base Plate	1	SS400
2	Cover Plate	1	SS400
3	Silde Plate	2	SS400
4	Silde Plate	1	S45C Oil Free Type
5	Collar	1	SS400
6	Arm	1	SS400
7	Hexagon Socket Head Bolt	4	SCM435 M10 X 50
8	Hexagon Socket Head Bolt	2	SCM435 M12 X 25

No.	Description	Qty	Material and Remark
9	Spring Washer	4	For M10
10	Washer	2	
11	Lock Nut	1	U Nut
12	Dowel Pin	4	Ø10 X 30
13	Spring Pin	1	Ø6 X 15
14	Hexagon Socket Head Bolt	4	SCM435 M8 X 16
15	Air Cylinder	1	CA2L40 by SMC

ORDER EXAMPLE: Model S — 25SODA-BT100

Model	S	L	L1	L2	L3	Weight (kg)
25SODA-BT	50	220	265	90	25	13.5
	100	270	315	115	45	15.9
	150	320	365	140	95	18.3
	200	370	415	165	145	21.0

SUN RISE technologies
Tel: +662-324-3184-(89) Fax: +662-324-3190 / +662-324-3103
Website: www.sunrisegr.com Email: sale@sunrisegr.com

Disappearing Gauge - ดีเอเกจ

OIL FREE™



Model: 25SODA-B

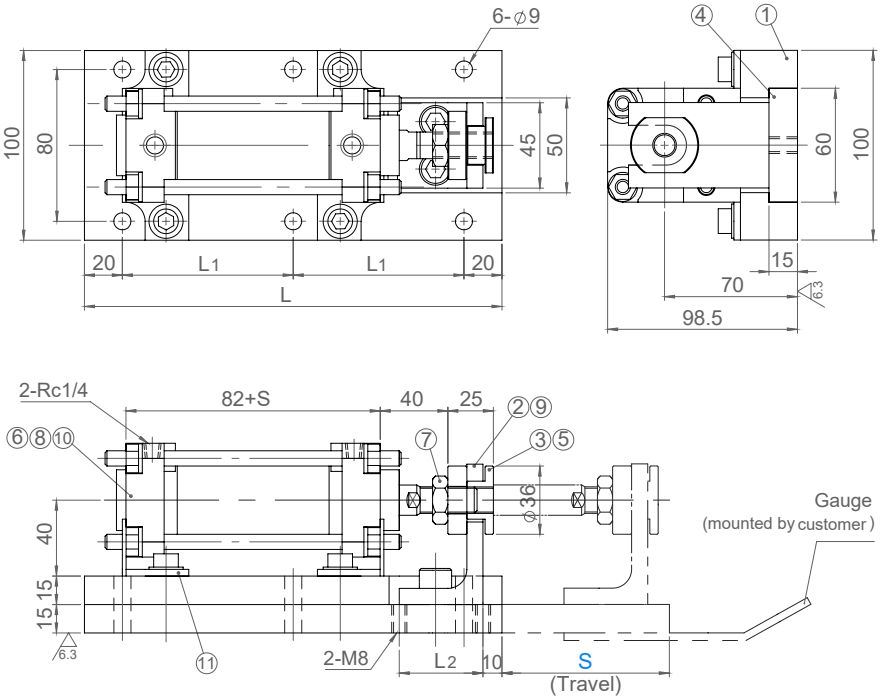

No.	Description	Qty	Material and Remark
1	Cover Plate	1	FC250
2	Arm	1	SS400
3	Cylinder Head Block	1	SS400
4	Silde Plate	1	S45C
5	Split Plate	1	SWRM10 Ø3 X 45
6	Air Cylinder	1	CA2B40 by SMC

No.	Description	Qty	Material and Remark
7	Hexagon Nut	1	For M14
8	Hexagon Socket Head Bolt	4	SCM435 M8 X 20
9	Hexagon Socket Head Bolt	2	SCM435 M12 X 20
10	Spring Washer	4	For M8
11	Angle	1	SS400
12	Angle	1	SS400

ORDER EXAMPLE — Model S: 25SODA-B100

Model	S	L	L1	L2	Weight (kg)
25SODA-B	50	220	90	25	11.2
	100	270	115	45	13.5
	150	320	140	95	16.0
	200	370	165	145	18.7

OIL FREE™

Model: 25PKDGM



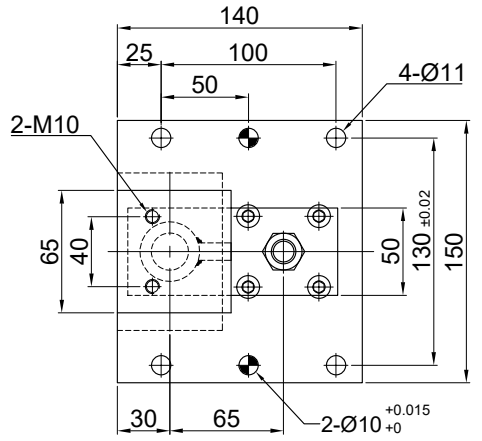

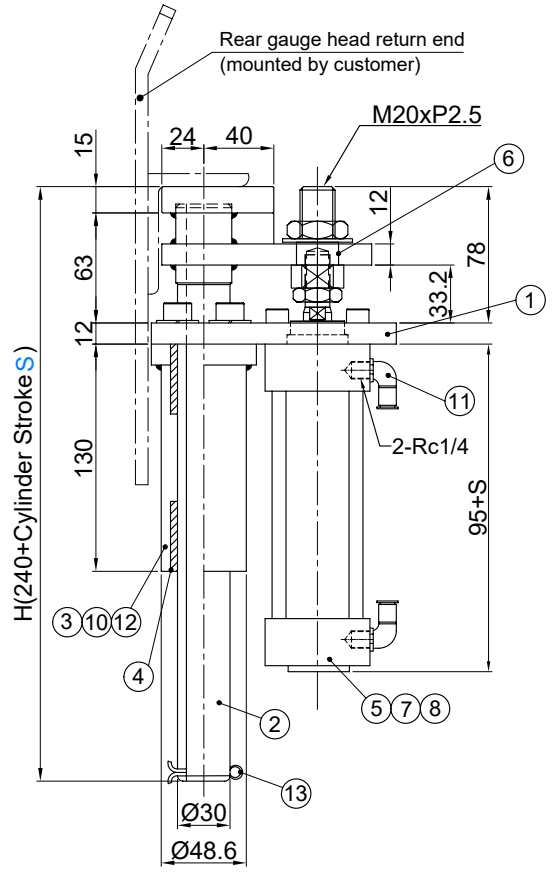

No.	Description	Qty	Material and Remark
1	Base Plate	1	SS400
2	Guide Post	1	STKM
3	Bushing Holder	1	SS400
4	Oil Free Bushing	2	Copper Alloy with Graphite
5	Air Cylinder	1	MBB40 by SMC
6	Collar	1	STKM
7	Flat Washer	2	For M20
8	U Nut	1	SCM435 M20
10	Hexagon Socket Head Bolt	4	SCM435 M10 X 25
11	Elbow	2	21SPLL10-02PT
12	Spring Washer	4	For M10
13	Cotter Pin	1	Ø5 X 40

ORDER EXAMPLE: Model S — 25PKDGM100

Model	Cylinder Stroke S	H	Weight (kg)
25PKDGM	100	340	6.7
	150	390	7.1
	200	440	7.4

Disappearing Gauge - ดีเอเกจ

OIL FREE™

Model: 25SODA-RT



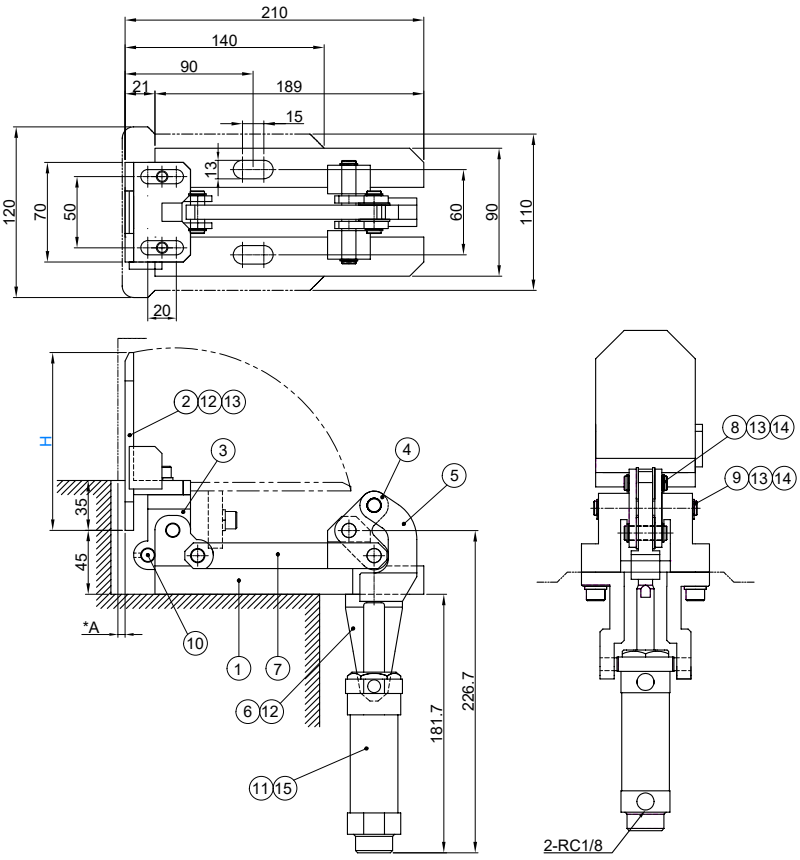

No.	Description	Qty	Material and Remark
1	Gauge Base	1	S50C
2	Stopper Plate	1	SS400
3	Gauge Bracket	1	S50C
4	Joint	1	S50C
5	Arm	1	S50C
6	Cylinder Support	2	S50C
7	Rod	1	SS400
8	Joint Pin (S)	3	S45C
9	Joint Pin (L)	2	S45C
10	Stopper Pin	1	SCM435
11	Air Cylinder	1	CM2U32-35AZ by SMC
12	Hexagon Socket Head Bolt	6	SCM435 M8 X 25
13	Washer	5	For M8
14	Split Pin	1	Ø2 X 16
15	Split Pin	1	Ø3 X 30

ORDER EXAMPLE: Model H — 25SODA-RT100

Model	H
25SODA-RT	75
	100
	125
	150
	175
	200
	225
	250

Disappearing Gauge - ดีเอเกจ

OIL FREE™

Model: 25PRDG

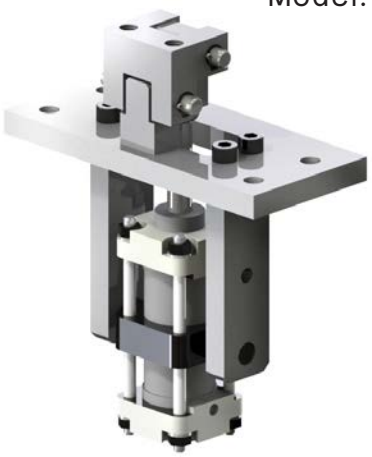

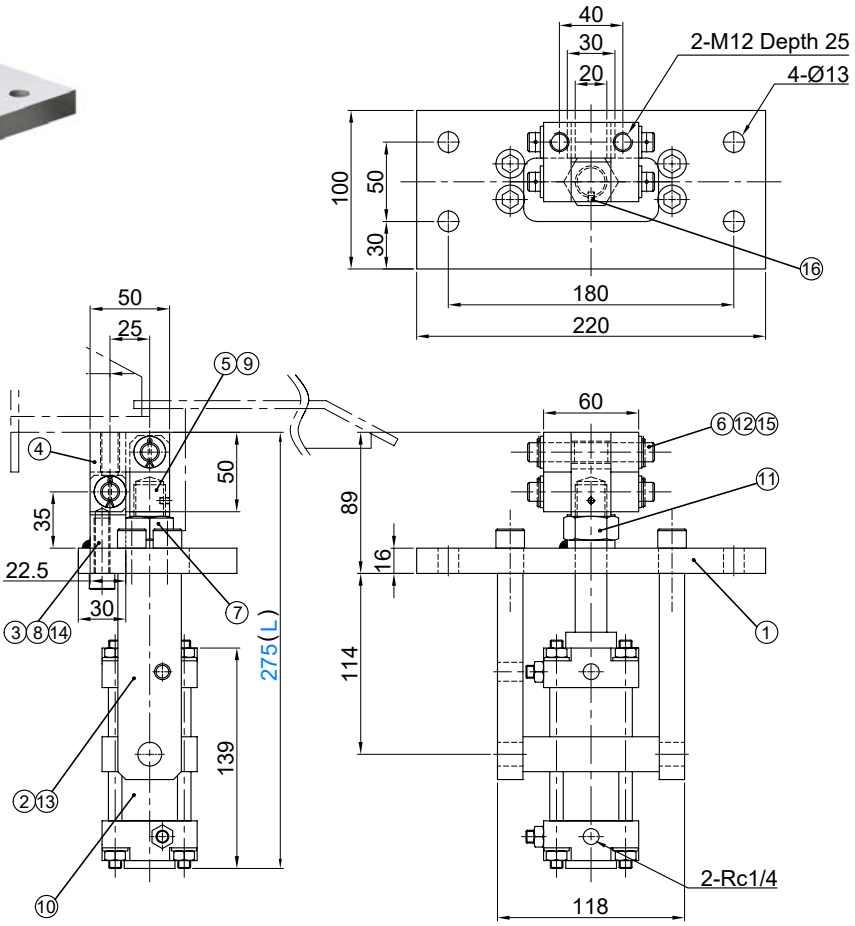

No.	Description	Qty	Materrial and Remark
1	Base Plate	1	SS400
2	Cylinder Support	2	SS400
3	Gauge Bracket Support	1	SS400
4	Gauge Bracket	1	SS400
5	Joint	1	SS400
6	Joint Pin	2	S45C HRC55-60
7	Turning Lock Plate	1	SPPC T=0.8
8	Bushing	1	25SMB012-020

No.	Description	Qty	Materrial and Remark
9	Bushing	1	25SMB012-020
10	Air Cylinder	1	CA2T40-50Z by SMC
11	Hexagon Nut	1	M20 X 15
12	Cotton Pin	4	3 X 18
13	Hexagon Socket Head Bolt	4	SCM435 M12 X 40
14	Hexagon Socket Head Bolt	1	SCM435 M10 X 35
15	Washer	4	For Ø12
16	Hexagon Socket Head Screw	1	M4 X 6

ORDER EXAMPLE

Model	L
25PRDG	275

SUN RISE technologies
Tel: +662-324-3184-(89) Fax: +662-324-3190 / +662-324-3103
Website: www.sunrisegr.com Email: sale@sunrisegr.com

Side Gauge - ไซด์เกจ

OIL FREE™



Model: 25SGAD

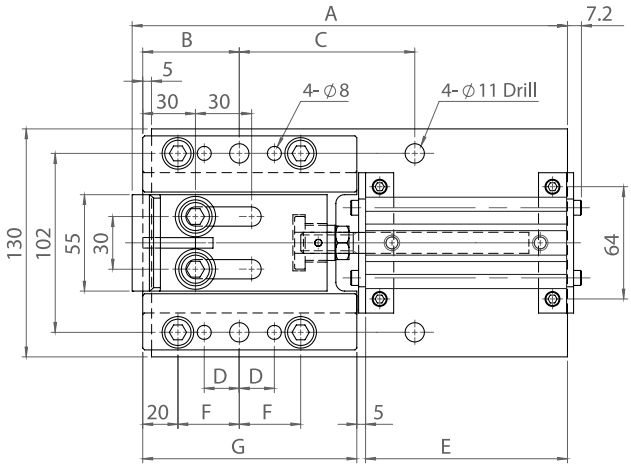

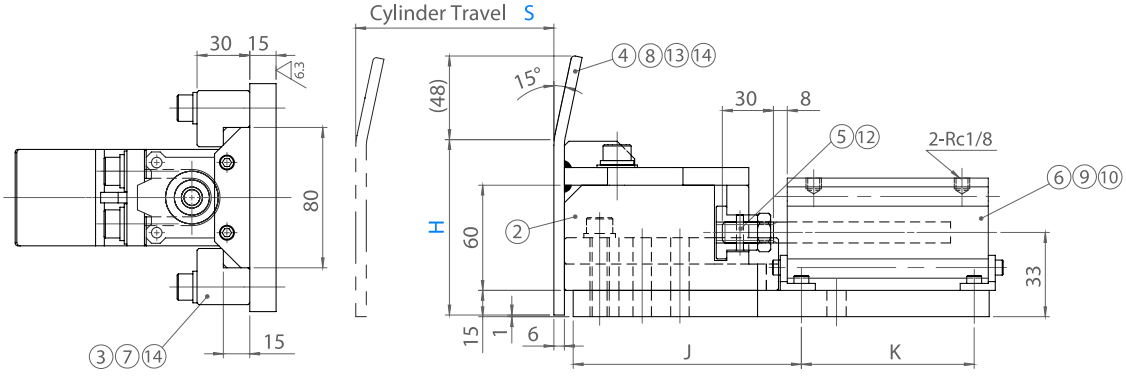

No.	Description	Qty	Materrial and Remark
1	Base Plate	1	SS400
2	Silde Holder	1	FC250 with Graphine
3	Guide Plate	2	Bronze with Graphite (SO#50 SP2)
4	Gauge Plate	1	SS400
5	Pusher Boss	1	S45C
6	Air Cylinder	1	CQ2L40 by SMC (Special oder Cylinder)
7	Hexagon Socket Head Bolt	4	SCM435 M10 X 45

No.	Description	Qty	Materrial and Remark
8	Hexagon Socket Head Bolt	2	SCM435 M10 X 35
9	Hexagon Socket Head Bolt	4	SCM435 M6 X 16
10	Spring Washer	4	S25CD For M6
11	Spring Pin	4	Ø8 X 40
12	Split Pin	1	Ø4 X 30
13	Spring Washer	2	For M10
14	Washer	6	For M10

ORDER EXAMPLE: Model S - H → 25SGAD50-75

เลือกค่า H หากต้องการแผ่นเกจ
Choose H for gauge attachment

Model	Cylinder Travel S	H	A	B	C	D	E	F	G	J	K
25SGAD	30	75 100 150 200 250 300	163	50	60	15	60	30	92	100	43.5
	50		183	50	80	15	80	30	92	100	63.5
	75		248	55	100	20	115	35	122	130	98.5

ชิ้นส่วนหาตำแหน่ง

Side Gauge (Cam Type) - ไซด์เกจ รุ่นระบบแคม

OIL FREE™





Model: 25SGCT

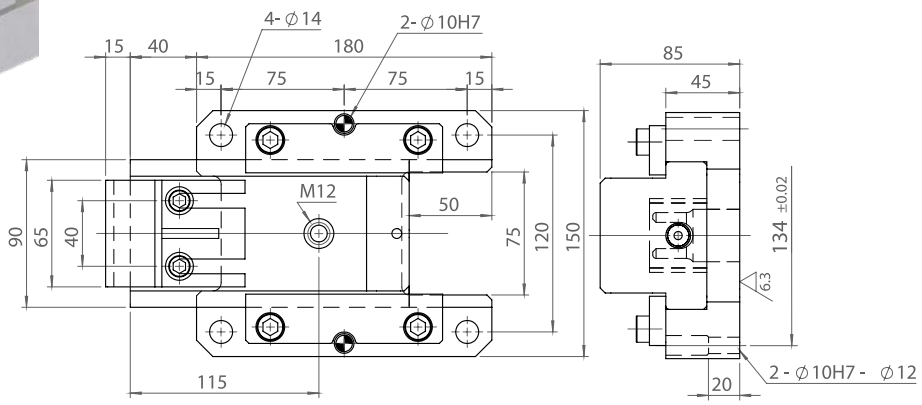

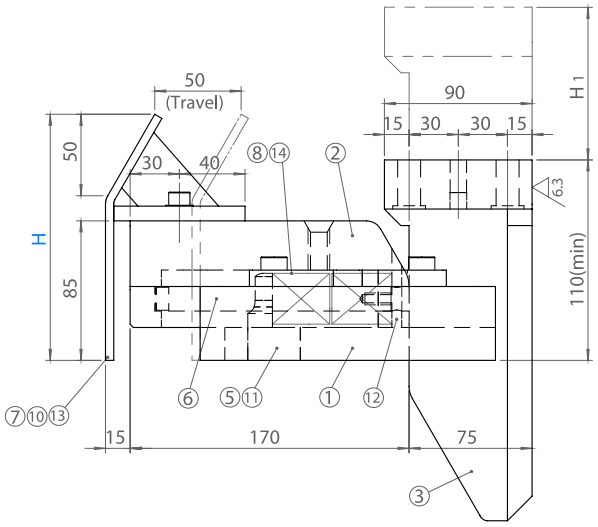

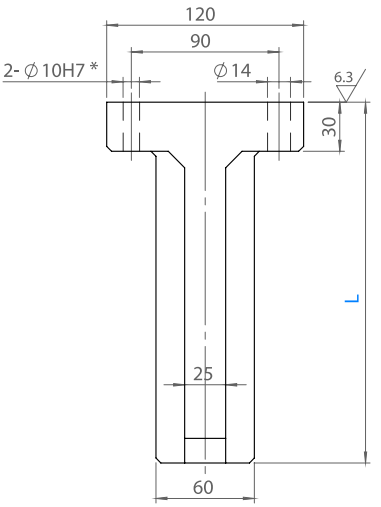

No.	Description	Qty	Materrial and Remark
1	Base	1	FC250
2	Silde	1	FC250 with Graphine
3	Driver	1	FC250
4	Upper Plate	2	SS400
5	Spring Stopper	1	SS400
6	Spring Guide Pin	1	SS400
7	Gauge Plate	1	SS400

No.	Description	Qty	Materrial and Remark
8	Spring	2	19SF30-65
9	Hexagon Socket Head Bolt	4	SCM435 M10 X 25
10	Hexagon Socket Head Bolt	2	SCM435 M8 X 20
11	Set Bolt	1	SCM435 M6 X 10
12	Split Pin	1	SUJ2 Ø6(m6) X 30
13	Washer	2	For M8
14	Washer	1	S45C

ORDER EXAMPLE: Model S - H → 25SGCT220-150

เลือกค่า H หากต้องการแผ่นเกจ
Choose H for gauge attachment

Model	L	H	H1	Spring	
				Initial Load (N)	Final Load (N)
25SGCT	220	150	168.66	141.4	685.3
		200			
		250			
	300	150	248.66		
		200			
		250			

SUN RISE technologies
Tel: +662-324-3184-(89) Fax: +662-324-3190 / +662-324-3103
Website: www.sunrisegr.com Email: sale@sunrisegr.com

Panel Input Detector Gauge - ระบบเช็คแผ่นเหล็ก

OIL FREE™

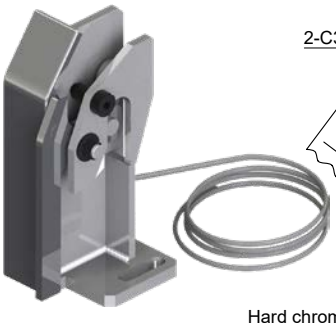

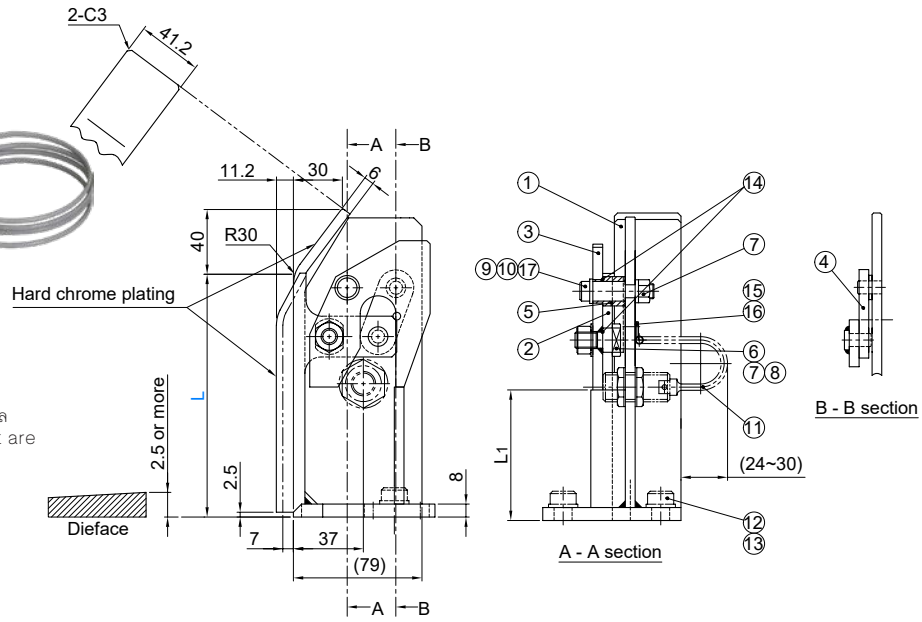

Models:
25HKFM-L *(Left Hand)*
25HKFM-R *(Right Hand)*

แผ่นเพลทชุบฮาร์ดโครมทั้งสองโมเดล
Both models's panel contact are hard chrome plated

การต่อสวิทช์
Switch mounting

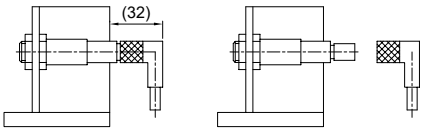

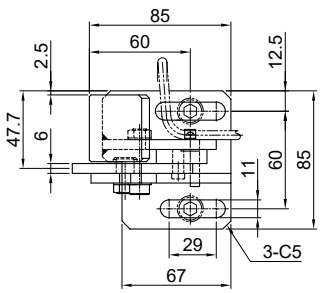

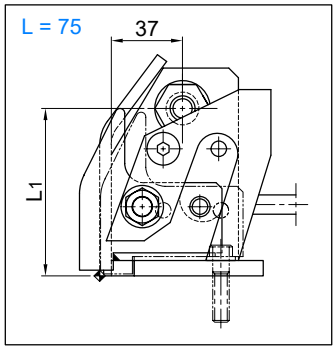

No.	Description	Qty	Material and Remark
1	Gauge	1	SS400 Hard chrome plating
2	Detection Lever	1	SS400 Hard chrome plating
3	F Link	1	SS400
4	R Link	1	SS400
5	Collar	1	S45C
6	Pin	1	S45C
7	Hexagon Nut	2	For M8
8	Washer	1	For M8
9	Spring Washer	1	For M8
10	Hexagon Socket Head Bolt	1	M8 X 40

No.	Description	Qty	Material and Remark
11	Proximity Switch (for AC)	(1)	E2E-X5Y1-5M by Omron
	Proximity Switch (for DC)	(1)	E2E-X5E1-5M by Omron
	Proximity Switch (for EC)	(1)	IG0348 by EFECTOR
12	Hexagon Socket Head Bolt	2	M10 X 25 (Accessory)
13	Flat Washer	2	For M10 (Accessory)
14	Shim Ring	2	T = 0.2
15	Round Head Screw	1	M4 X 8
16	Cable cilp	1	UC-1
17	Flat Washer	1	for M8

ORDER EXAMPLE: Model L - Switch Type
25HKFM-L100-AC

Model	L	Switch Type	L1
25HKFM-L 25HKFM-R	75	AC (24 - 240V) DC (24V) EC (EFECTOR Connector) SN (without switch)	85
	100		30
	150		80

ชิ้นส่วนหาตำแหน่ง

Panel Input Detector Gauge - ระบบเช็คแผ่นเหล็ก

OIL FREE™



Models:
25PADG-BL *(Left Hand)*
25PADG-BR *(Right Hand)*

แผ่นเพลทชุบฮาร์ดโครมทั้งสองโมเดล
Both models's panel contact are hard chrome plated

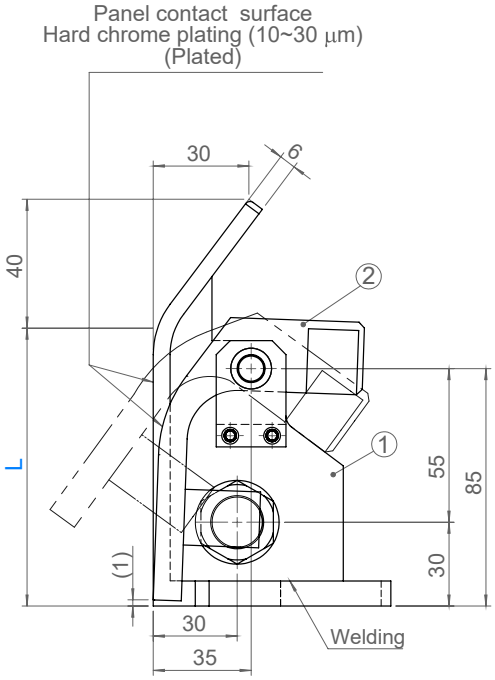

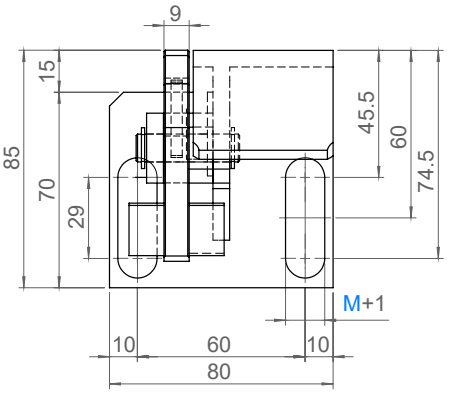

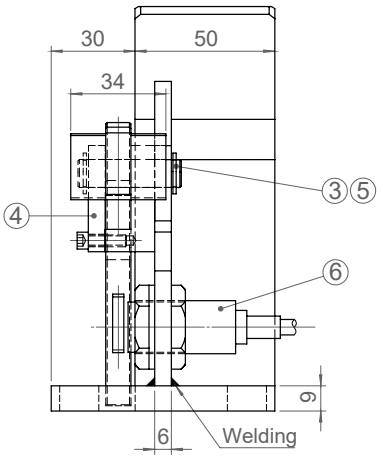

การต่อสวิทช์
Switch mounting

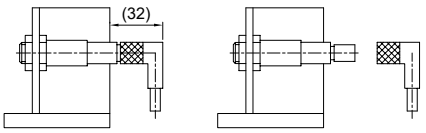

No.	Description	Qty	Material and Remark
①	Body of front gauge	1	SS400
②	Panel detection lever	1	SS400
③	Lever Pin	1	S45C
④	Support Plate	1	SS400
⑤	Snap Ring (C Type)	2	-
⑥	Proximity Switch (for AC)	(1)	E2E-X5Y1-5M by Omron
	Proximity Switch (for DC)	(1)	E2E-X5E1-5M by Omron

ORDER EXAMPLE	Model	L	-	Switch Type	-	M
	25PADG-BL100-AC-M10					

Model	L	Switch Type	Mounting Bolt M
25PADG-BL 25PADG-BR	75	AC (100V) DC (24V)	M10 M12
	100		
	150		

SUN RISE technologies
Tel: +662-324-3184-(89) Fax: +662-324-3190 / +662-324-3103
Website: www.sunrisegr.com Email: sale@sunrisegr.com

Sheet Support Gauge - ชีทซัพพอร์ต

OIL FREE™



Model: 25SSGNW

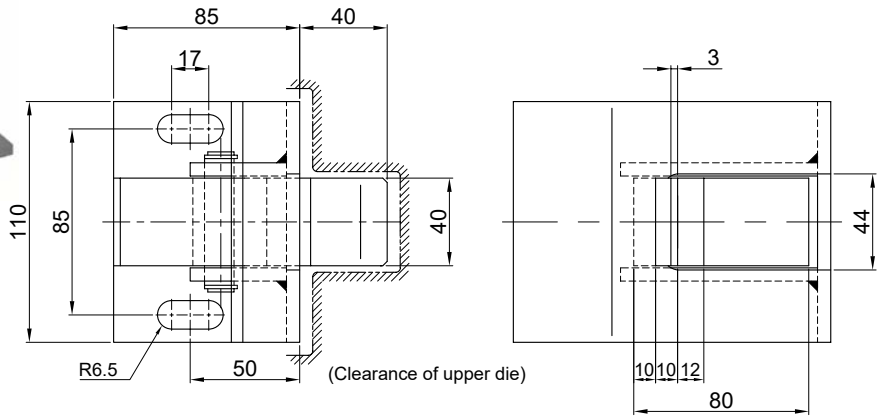

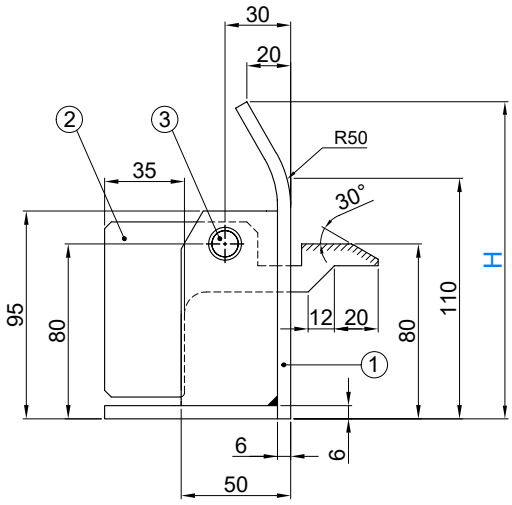

ORDER EXAMPLE | Model | H | 25SSGNW145

Model	H
25SSGNW	145

No.	Description	Qty	Material and Remark
①	Gauge (with base)	1	SS400
②	Support Plate	1	S45C
③	Hinge Pin	1	S45C with retaining ring

Sheet Support Gauge - ชีทซัพพอร์ต

OIL FREE™

Model: 25SSGW



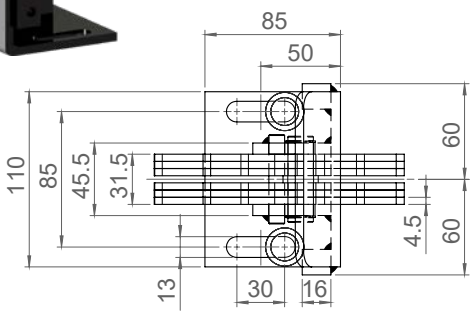

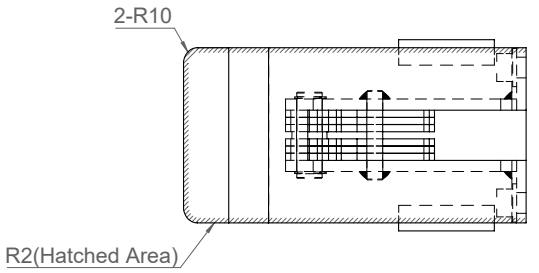

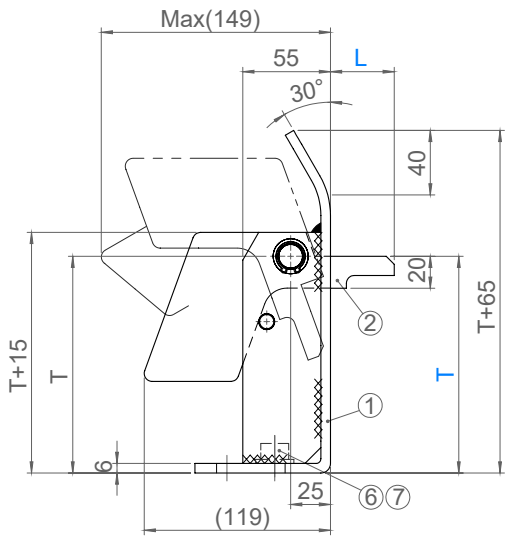

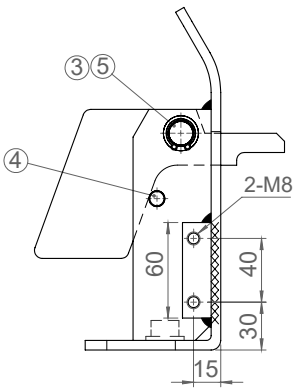

ORDER EXAMPLE: Model T - L → 25SSGW120-20

Model	T	L
25SSGW	90	20 40
	120	
	150	
	180	

No.	Description	Qty	Material and Remark
①	Gauge	1	SPC
②	Support Plate	6	SPC
③	Support Point Hinge Pin	1	S45C
④	Collar	5	SGP (1 piece is assembled, 4 piece are accompanied)
⑤	C Type Retaining Ring	2	For Ø6 shaft
⑥	Hexagon Socket Head Bolt	2	SCM435 M12 X 30 (Accessory)
⑦	Washer	2	For M12 (Accessory)

② Support Plate

ORDER EXAMPLE: Model T → 25SSGW-P20

Model	L
25SSGW-P	20
	40

SUN RISE technologies
Tel: +662-324-3184-(89) Fax: +662-324-3190 / +662-324-3103
Website: www.sunrisegr.com Email: sale@sunrisegr.com

Rough Guides - ไกด์แบบไม่เรียบ

OF OIL FREE™



Model: 25SRG
เสาตรงกลาง
Center Type



Model: 25SRG-L
เสาด้านซ้าย
Left Hand Type



Model: 25SRG-R
เสาด้านขวา
Right Hand Type

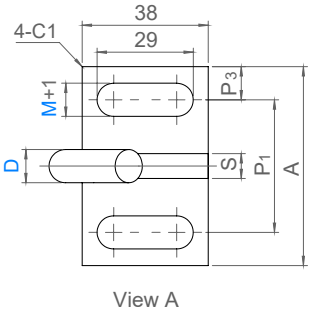

View A

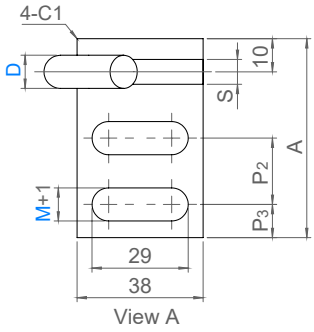

View A

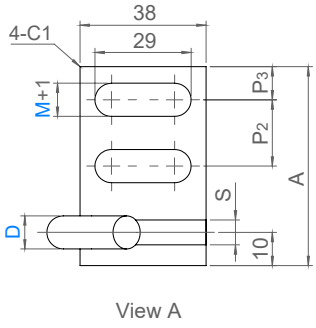

View A

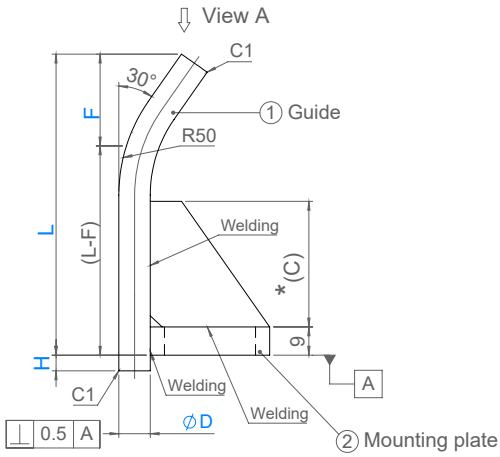

ORDER EXAMPLE Model D - L - F - H - M
25SRG-R18-100-20-50-M10

Ⓜ ① S45C (เสา / rod)
② SS400

Model	D	5mm increments			M	A	P1	P2	P3	S
		L	F	H						
25SRG 25SRG-L 25SRG-R	8	60 ~ 300	10 ~ 50 F ≤ L - 50	0 ~ 80	M10 M12	60	40	20	10	6
	10									
	12									9
	16									
	20				M10	75	50	25	12.5	16

ชิ้นส่วนหาตำแหน่ง

Nest Guides (Upper Die Relief) - เนสต์ไกด์

OIL FREE™



Model: 25SNGU

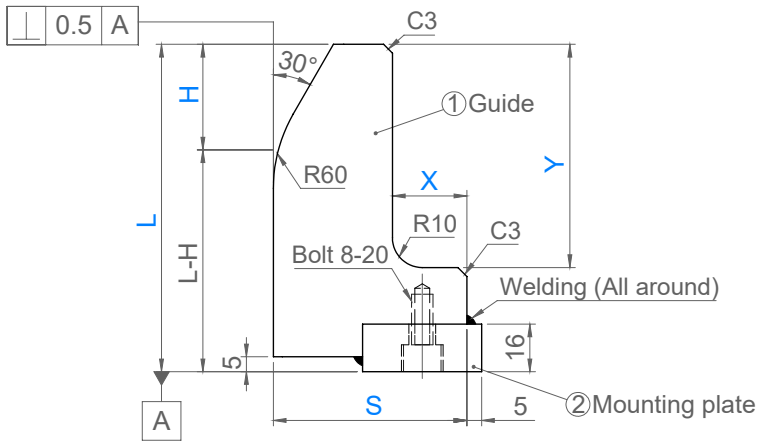

Model: 25SNGU

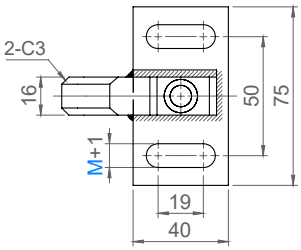

Model: 25SNGU-R

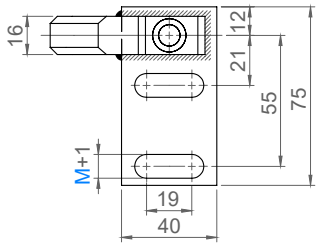

Model: 25SNGU-L

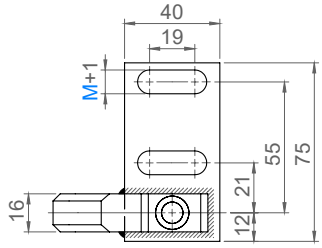

Model: 25SNGU-RN

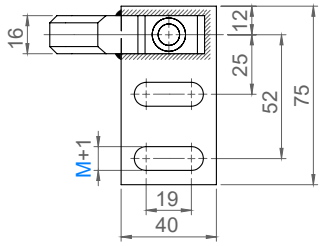

Model: 25SNGU-LN

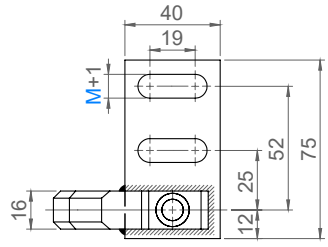

ORDER EXAMPLE

Model	L - H - S - X - Y - M
	25SNGU105-30-60-20-65-M10

Ⓜ ① S45C (เสาไกด์ / guide)
② SS400

Model	5mm increments					Mounting Bolt M
	L	H	S	X (S - X) ≥ 30	Y (L - Y) ≥ 40	
25SNGU 25SNGU-R 25SNGU-L 25SNGU-RN 25SNGU-LN	75 - 100	20 - 40	50 - 100	20 - 70	35 - 60	M10 M12
	105 - 150				65 - 110	
	155 - 200				115 - 160	

SUN RISE technologies
Tel: +662-324-3184-(89) Fax: +662-324-3190 / +662-324-3103
Website: www.sunrisegr.com Email: sale@sunrisegr.com

Nest Guides - เนสต์ไกด์

OIL FREE™



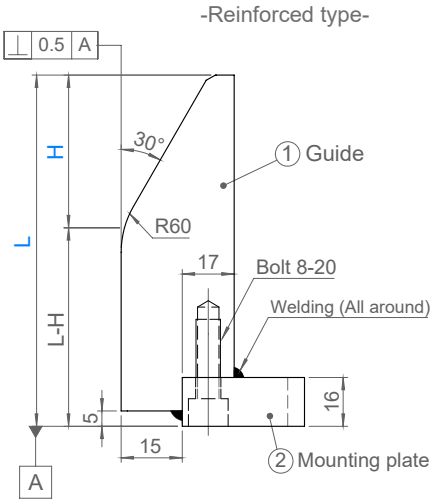

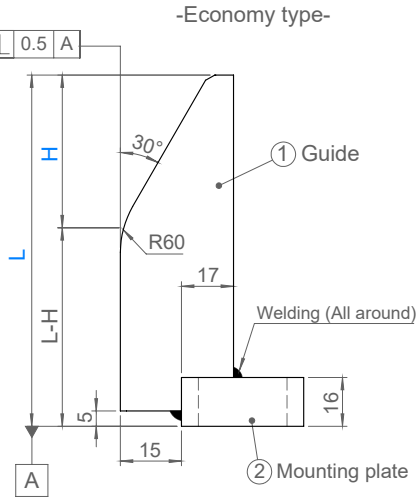

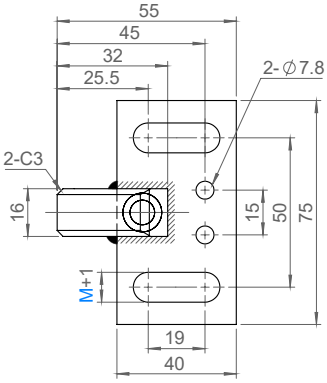

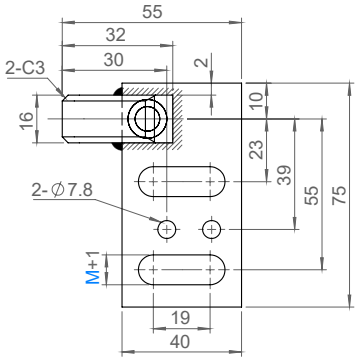

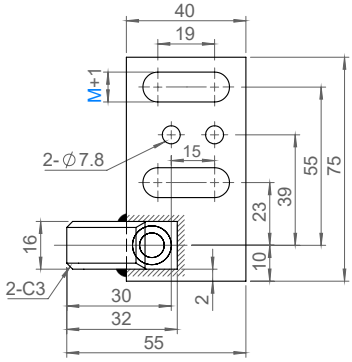

Reinforced	25SNGN	25SNGN-R	25SNGN-L
Economy	25ENGB	25ENGB-R	25ENGB-L

แบบแข็งแรง
Reinforced Type

ORDER EXAMPLE: Model L - H - S → 25SNGN100-30-M12

Ⓜ ① S45C (เสาไกด์ / guide) ② SS400

Model	5mm increments		Mounting Bolt
	L	H	M
25SNGN 25SNGN-L 25SNGN-R	65 - 200	20 - 40	M10 M12

แบบประหยัด
Economy Type

ORDER EXAMPLE: Model L - H - S → 25ENGB100-30-M12

Ⓜ ① SS400(เสาไกด์ / guide) ② SS400

Model	5mm increments		Mounting Bolt
	L	H	M
25ENGB 25ENGB-L 25ENGB-R	65 - 350	20 - 40	M10 M12

ชิ้นส่วนหาตำแหน่ง

Nest Guides (No Dowel Pilot Hole) - เนสต์ไกด์

OIL FREE™



Model: 25SNGG

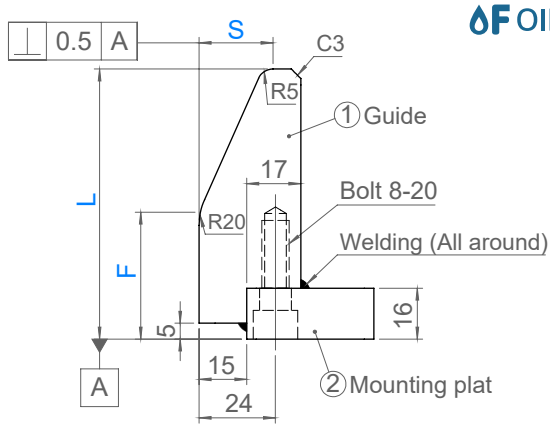

Model: 25SNGG

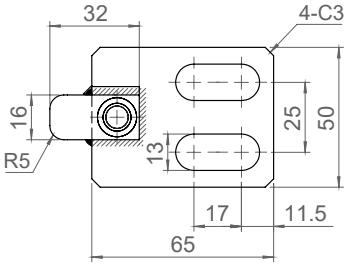

Model: 25SNGGC

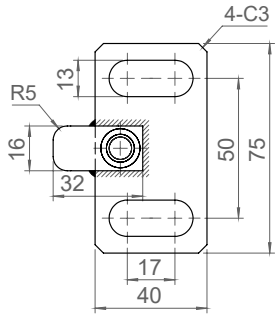

Model: 25SNGGC-R

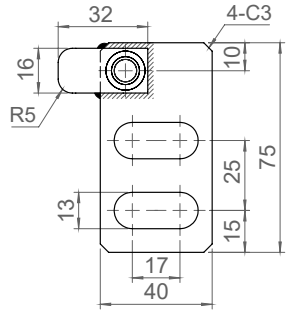

Model: 25SNGGC-L

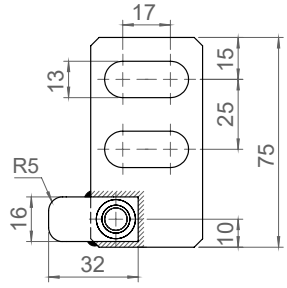

ORDER EXAMPLE: Model L - F - S → 25SNGG100-50-15

Ⓜ ① S45C (เสาไกด์ / guide)
② SS400

Model	L	F 10mm increments	S
25SNGG 25SNGGC 25SNGGC-R 25SNGGC-L	60	20 - 50	15 20
	80	20 - 70	
	100	20 - 90	
	120	20 - 110	
	140	20 - 130	
	160	20 - 150	
	180	20 - 170	
	200	20 - 190	

Tel: +662-324-3184-(89) Fax: +662-324-3190 / +662-324-3103
Website: www.sunrisegr.com Email: sale@sunrisegr.com

Configurable Shape Nest Guides (Reinforced) - เนสต์ไกด์ แบบปรับแต่งได้

OF OIL FREE™



Model: 25SNGA



Model: 25SNGC

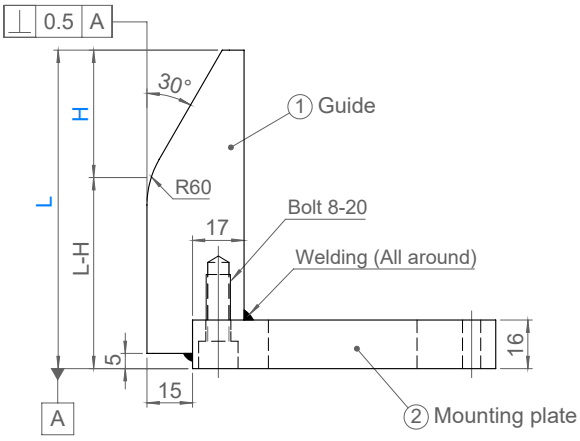

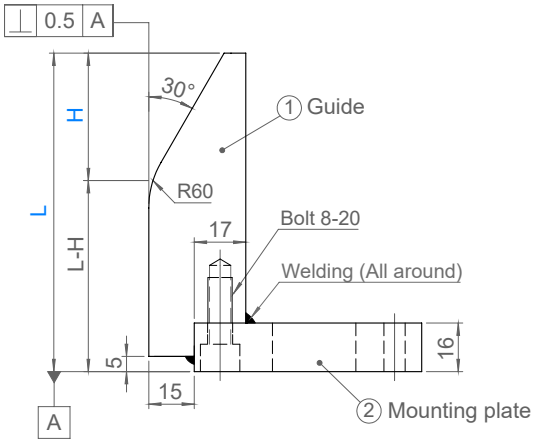

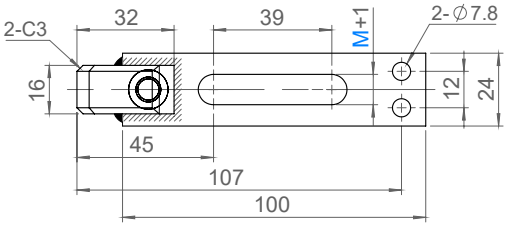

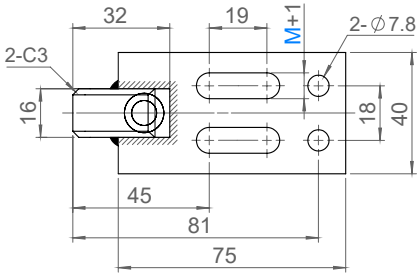

ORDER EXAMPLE Model L - H - M
25SNGA100-30-M10

Ⓜ ① S45C (เสาไกด์ / guide)
② SS400

Model	5mm increments		Mounting Bolt M
	L	H	
25SNGA	65 - 200	20 - 40	M10 / M12
25SNGC	65 - 200	20 - 40	M10

ชิ้นส่วนหาตำแหน่ง

Configurable Shape Nest Guides (Economy) - เนสต์ไกด์ แบบปรับแต่งได้

OIL FREE™



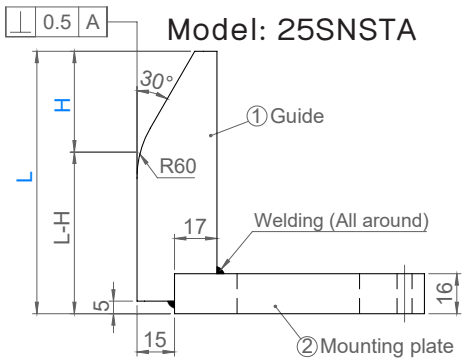

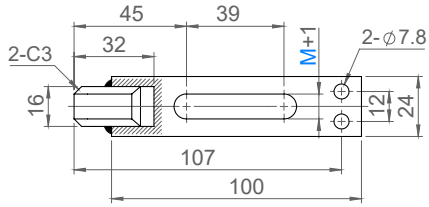



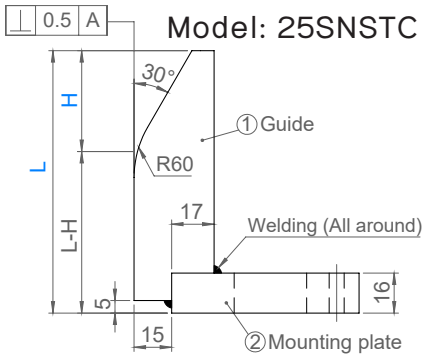

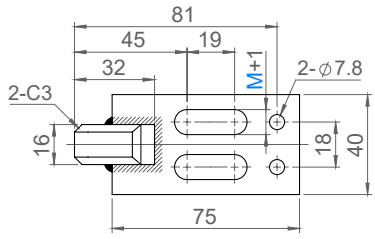



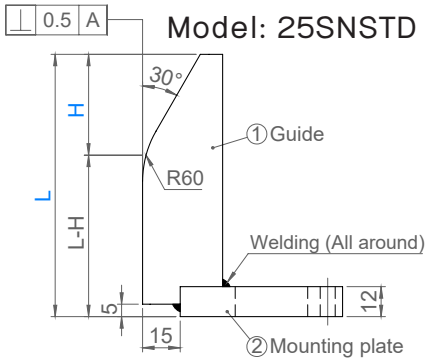

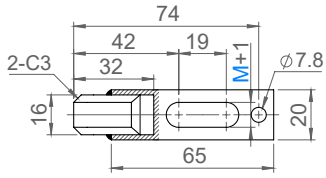

ORDER EXAMPLE | Model | L - H - M | 25SNSTA100-30-M10

Ⓜ ① SS400 (เสาไกด์ / guide)
② SS400

Model	5mm increments		Mounting Bolt M
	L	H	
25SNSTA	65 ~ 200	20 ~ 40	M10 / M12
25SNSTC 25SNSTD	65 ~ 200	20 ~ 40	M10

SUN RISE technologies
Tel: +662-324-3184-(89) Fax: +662-324-3190 / +662-324-3103
Website: www.sunrisegr.com Email: sale@sunrisegr.com

Configurable Length Nest Guides - เนสต์ไกด์ แบบปรับแต่งความยาวได้

OIL FREE™



Model: 25SNGNX
แบบแข็งแรง
Reinforced Type



Model: 25SENGX
แบบประหยัด
Economy Type

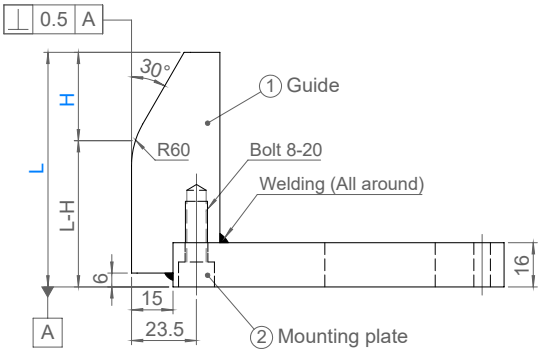

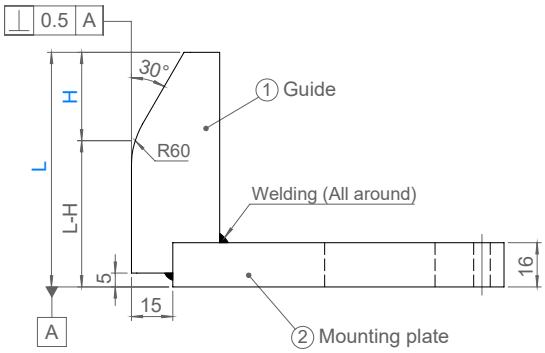

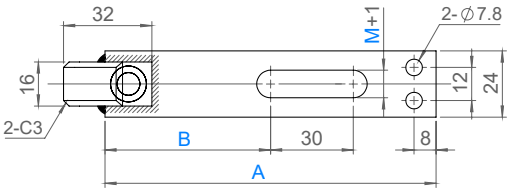

Ⓜ ① S45C (เสาไกด์ / guide)
② SS400

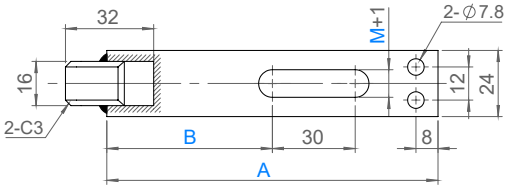

Ⓜ ① SS400 (เสาไกด์ / guide)
② SS400

ORDER EXAMPLE Model L - H - M
25SNSTA100-30-M10

Model	5mm increments		A 10mm Increments	B 5mm Increments	Mounting Bolt M
	L	H			
25SNGNX 25SENGX	65 ~ 200	20 ~ 40	100 ~ 200	35 ≤ B ≤ A - 50	M10 M12

ชิ้นส่วนหาตำแหน่ง

Special Configurable Nest Guides - เนสต์ไกด์ แบบปรับแต่งพิเศษ

OIL FREE™



Model: 25SNGW
รุ่นปรับความกว้าง
Wide Config Type

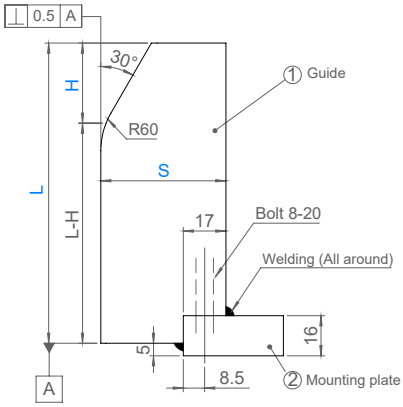



Model: 25SNGWK
รุ่นปรับมุมแผ่นไกด์
Angle Config Type

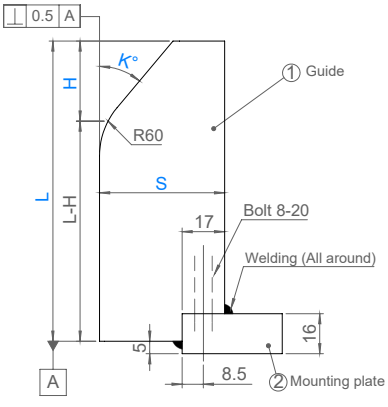

*S ≥ 10+Hxtan K°



Model: 25SNGWS
รุ่นหัวตะขอ (รอยบาก)
Notched Guide Type

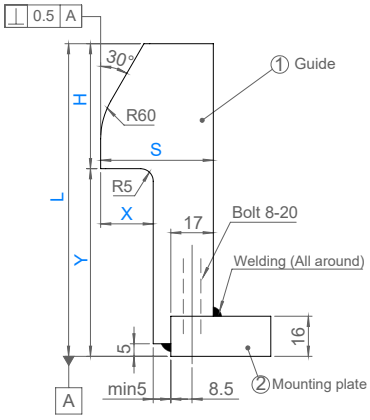

A (Center type)

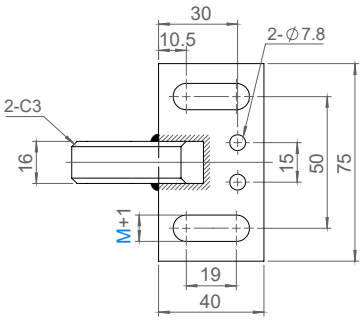

BR (Right hand type)

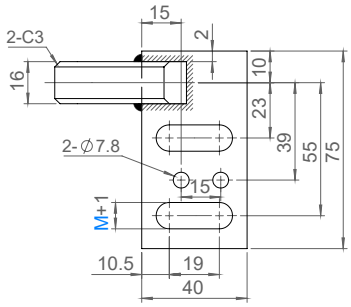

BL (Left hand type)

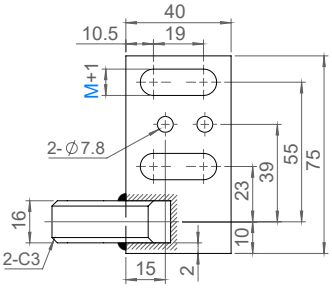

ORDER EXAMPLE	Model	L - H - S - K - X - Y - M
	25SNGWBR100-30-50-M12	

Ⓜ ① S45C (เสาไกด์ / guide)
② SS400

Model	Mounting Orientation	5mm increments			Mounting Bolt M
		L	H	S	
25SNGW	A (Center Type) BR (R Type) BL (L Type)	65 - 200	20 - 40	35 - 100	M10 M12

Model	Mounting Orientation	5mm increments				Mounting Bolt M
		L	H	S	K	
25SNGWK	A (Center Type) BR (R Type) BL (L Type)	65 - 200	20 - 40	32 35 - 100	15 ≤ K ≤ 60	M10 M12

Model	Mounting Orientation	5mm increments			X 1mm increments	Y 5mm increments	Mounting Bolt M
		L	H	S			
25SNGWS	A (Center Type) BR (R Type) BL (L Type)	65 - 200	20 - 40	32 35 - 100	X ≤ S - 22	Y ≤ L - H - 15	M10 M12

SUN RISE technologies
Tel: +662-324-3184-(89) Fax: +662-324-3190 / +662-324-3103
Website: www.sunrisegr.com Email: sale@sunrisegr.com

Nest Guides Blank Parts - ชิ้นส่วน เนสต์ไกด์

OIL FREE™



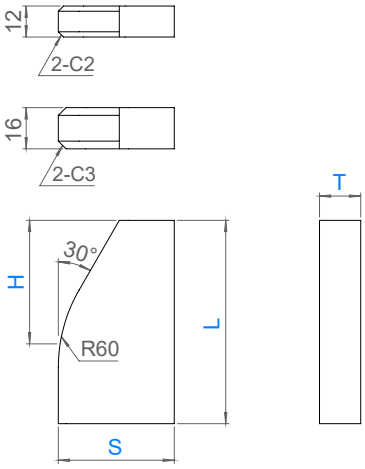

Ⓜ 25NBB: SS400
25NBBC: S45C



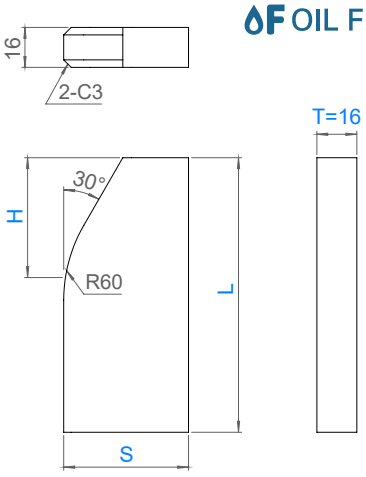

Ⓜ S45C

ORDER EXAMPLE: Model T - S - L - H — 25NBB16-50-100-30

Model	Thickness T	S	L 5mm increments	H
25NBB	12	32 50 75 100	65 ~ 200	30 40
	16			
25NBBC	16			

ORDER EXAMPLE: Model T - S - L - H — 25NBBCL16-50-100-30

Model	Thickness T	S	10mm increments	
			L	H
25NBBCL	16	50	200 ~ 350	20 ~ 60



25TEA

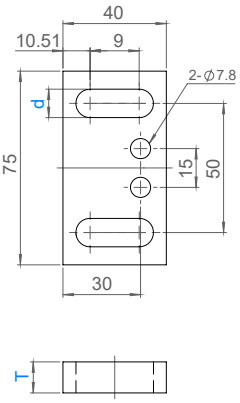



25TEB

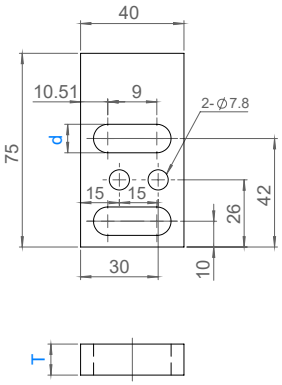



25TEC

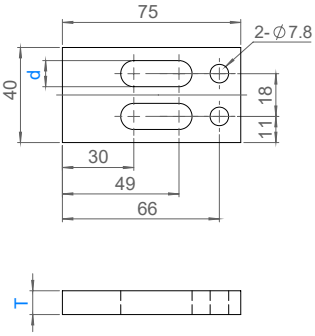



25TEE

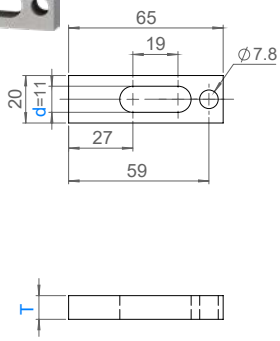

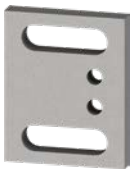

25TEL

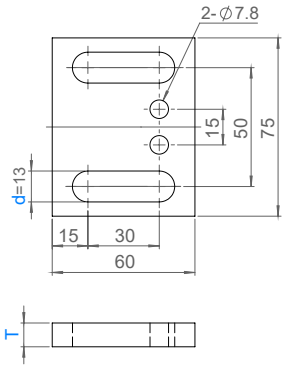

Ⓜ S45C

ORDER EXAMPLE: Model T - d — 25TEA16-13

Model	Thickness T	d
25TEA 25TEB	12	11
		13
	16	11
		13
25TEC	12	11
	16	11
25TEE	12	11
25TEL	16	13

ชิ้นส่วนหาตำแหน่ง

Nest Guide with Surface Support - เนสต์ไกด์ แบบมีหน้าสัมผัสกว้าง

OIL FREE™



Ⓜ SS400

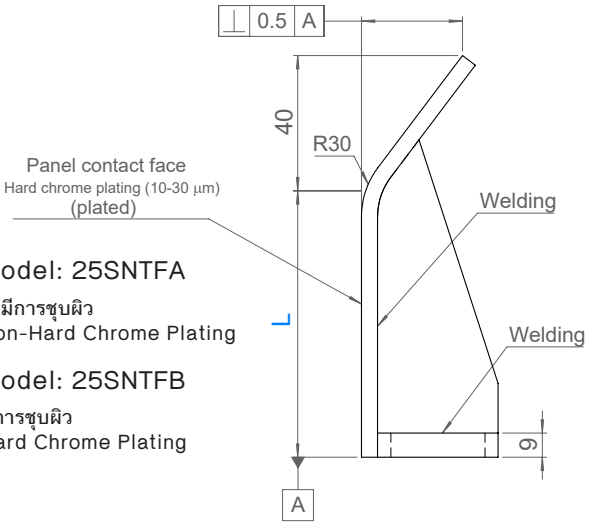

Model: 25SNTFA

ไม่มีการชุบผิว
Non-Hard Chrome Plating

Model: 25SNTFB

มีการชุบผิว
Hard Chrome Plating

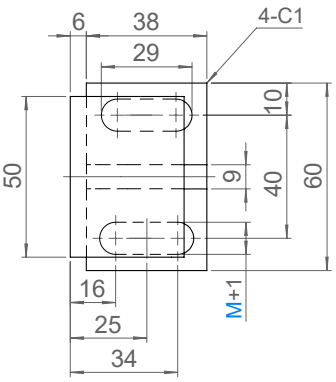

ORDER EXAMPLE: Model L - M → 25SNTFA100-M10

Model	L 5mm increments	Mounting Bolt M	Type
25SNTFA	75 ~ 150	M10 / M12	ไม่ชุบผิว / non-plated
25SNTFB			ชุบผิว / plated

Locating Pilot Pins - ไพล็อตพินล็อคตำแหน่ง

OIL FREE™



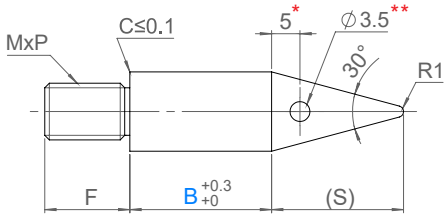

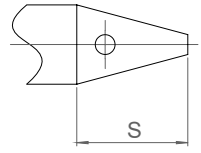

Tip shape of 25SLTL

* 25SLTL6 & 25SLTLH8 → 2

** 25SLTL6 & 25SLTLH8 → ∅2.5

25SLTLH : (S) = 1.6 x P

ORDER EXAMPLE: Model P - B → 25SLTL10-10

Ⓜ SKS3
37 ~ 43HRC

Model: 25SLTL ขนาด P ตายตัว
Fixed P dimension

Model	P	B	MxP	F	S
25SLTL	6	5 10	5x0.8	12	10
	8		6x1.0		
	9	10 15	6x1.0	12	10
	10		8x1.25	15	
	12		10x1.5		15
	14	15 20	12x1.75	15	15
	15				17
	16	20 25	12x1.75		
	20	25 30	16x2.0	25	20

Model: 25SLTLH กำหนดขนาด P และ B ได้
Config P and B

Model		P 0.01 increments	B 1 increments	MxP	F
25SLTLH	8	6.00 ~ 8.00	5 ~ 50	5x0.8	12
	10	8.00 ~ 10.00		6x1.0	
	12	10.00 ~ 12.00		8x1.25	15
	14	12.00 ~ 14.00		10x1.5	
	16	14.00 ~ 16.00		12x1.75	
	20	16.00 ~ 20.00		16x2.0	25

SUN RISE technologies
Tel: +662-324-3184-(89) Fax: +662-324-3190 / +662-324-3103
Website: www.sunrisegr.com Email: sale@sunrisegr.com

Locating Pilot Pins - ไพล็อตพินล็อคตำแหน่ง

OIL FREE™



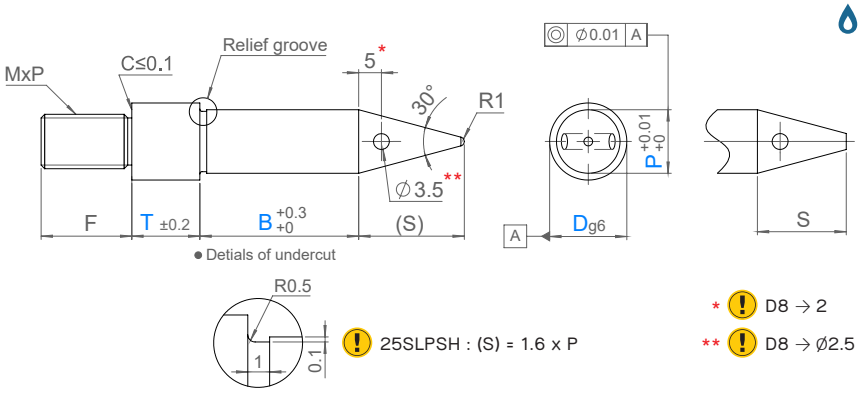

ORDER EXAMPLE — Model: D - P - B - T — 25SLPSH10-9.05-10-10

M SKS3 37 ~ 43HRC

Model: 25SLPS ขนาด P ตายตัว Fixed P dimension

Model	D	MxP	F	P	B	T	S
25SLPS	8	6x1.0	12	6	5	3	10
	10	8x1.25	15	8		5	10
	13	12x1.75		10			15
	16		15	13	10	10	17
	20	16x2.0	25	16			20
	25			20			25

Model: 25SLPSH กำหนดขนาด P B และ T ได้ Config P B and T

Model	D	P 0.01 increments	B 1 increments	T 1 increments	MxP	F
25SLPSH	8	6.00 ~ 8.00	5 ~ 60	3 ~ 15	6x1.0	12
	10	8.00 ~ 10.00			8x1.25	15
	13	10.00 ~ 12.00			12x1.75	
	16	12.00 ~ 14.00				
	20	14.00 ~ 16.00			16x2.0	25
	25	16.00 ~ 20.00				



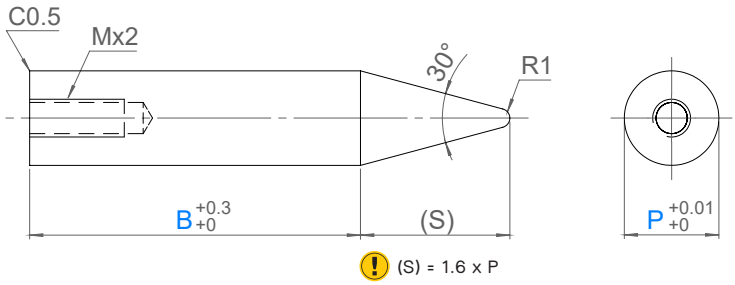

ORDER EXAMPLE — Model: P - B — 25SNSTH10-9.05-10.5

M SKS3 60 ~ 63HRC

Model: 25SNST ขนาด P ตายตัว Fixed P dimension

Model	P	B	MxP
25SNST	6	10 15	4x0.7
	8		5x0.8
	10	15 20	
	12		6x1.0
	13	20 30	
	15		
	16	30 40	
	20	40 50	8x1.25

Model: 25SNSTH กำหนดขนาด P และ B ได้ Config P and B

Model	P 0.01 increments	B 0.1 increments	MxP
25SNSTH 6	6.00 ~ 7.00	10 ~ 80	4x0.7
8	7.00 ~ 8.00		5x0.8
10	8.01 ~ 10.00		
12	10.00 ~ 12.00		6x1.0
13	12.01 ~ 13.00		
15	13.01 ~ 15.00		
16	15.01 ~ 16.00		
20	16.00 ~ 20.00		8x1.25

ชิ้นส่วนหาตำแหน่ง

Locating Pilot Pins - ไพล็อตพินล็อคตำแหน่ง

OIL FREE™



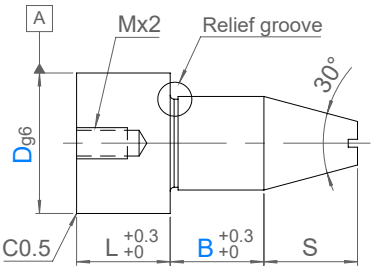

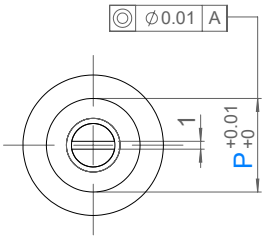

● Detials of undercut

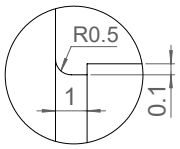

ORDER EXAMPLE: Model D - P - B → 25SDSTH10-8.05-3.1

Ⓜ SKS3 60 ~ 63HRC

Model: 25SDST ขนาด P ตายตัว Fixed P dimension

Model	D g6		MxP	P	L	S	B
25SDST	8	-0.005 -0.014	5x0.8	6	15	6	10
	10		6x1.0	8		8	
	13	-0.006 -0.017	8x1.25	10	20	12	
	16		10x1.5	12	24	17	
	20	-0.007 -0.020	12x1.75	16		20	15

Model: 25SDSTH กำหนดขนาด P และ B ได้ Config P and B

Model	D g6		P 0.01 increments	B 0.1 increments	MxP	L	S
25SDSTH	8	-0.005 -0.014	6.00 ~ 7.00	3.0 ~ 20.0	5x0.8	15	6
	10		7.00 ~ 9.00	3.0 ~ 30.0	6x1.0		8
	13	-0.006 -0.017	9.00 ~ 12.00	3.0 ~ 50.0	8x1.25	20	12
	16		12.00 ~ 15.00		10x1.5	24	17
	20	-0.007 -0.020	15.00 ~ 18.00				20



25SDKL10 → Ø2
25SDKLH10 → Ø2.5

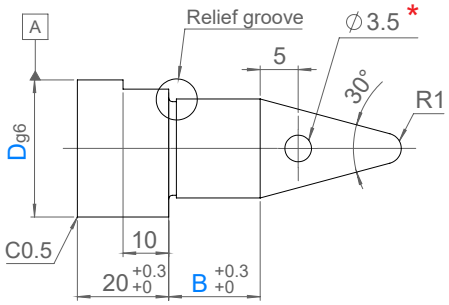

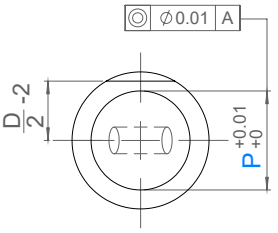

● Detials of undercut

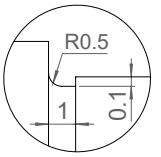

ORDER EXAMPLE: Model D - P - B → 25SDKLH13-7.05-5.1

Ⓜ SKS3 60 ~ 63HRC

Model: 25SDKL ขนาด P ตายตัว Fixed P dimension

Model	D g6		P	B
25SDKL	10	-0.005 -0.014	6	10
	13	-0.006 -0.017	8	
	16		10	
	20	-0.007 -0.020	12	
	25		16	15

Model: 25SDKLH กำหนดขนาด P และ B ได้ Config P and B

Model	D g6		P 0.01 increments	B 0.1 increments
25SDKLH	10	-0.005 -0.014	6.00 ~ 7.00	3.00 ~ 30.00
	13	-0.006 -0.017	7.00 ~ 9.00	
	16		9.00 ~ 12.00	3.00 ~ 50.00
	20	-0.007 -0.020	12.00 ~ 15.00	
	25		15.00 ~ 20.00	

SUN RISE technologies
Tel: +662-324-3184-(89) Fax: +662-324-3190 / +662-324-3103
Website: www.sunrisegr.com Email: sale@sunrisegr.com

Locating Pilot Pins - ไพล็อตพินล็อคตำแหน่ง

OIL FREE™



Model: 25SKSTH

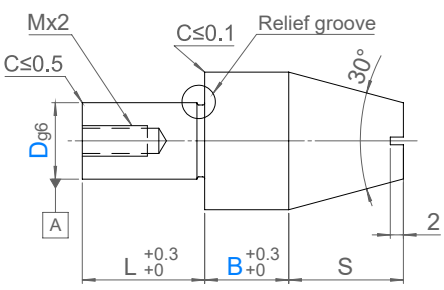

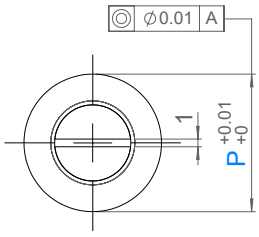

● Detials of undercut

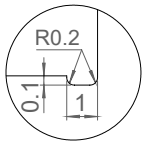

ORDER EXAMPLE: Model D - P - B → 25SKSTH10-15.05-2

Ⓜ SKS3
60 ~ 63HRC

Model	D g6		P 0.01 increments	B 0.1 increments	M	L	S
25SKSTH	5	-0.004 -0.012	8.00 ~ 8.99	1.00 ~ 12.00	3	12	8
			9.00 ~ 10.00				10
	6		10.00 ~ 10.99	1.00 ~ 15.00	3	12	10
			11.00 ~ 12.00				12
	8	-0.005 -0.014	12.00 ~ 12.99	1.00 ~ 15.00	4	15	15
			13.00 ~ 16.00				17
	10		14.00 ~ 14.99	1.00 ~ 20.00	5	15	17
			15.00 ~ 20.00				20
	13	-0.006 -0.017	16.00 ~ 16.99	1.00 ~ 20.00	6	20	20
			17.00 ~ 20.00				25
	16		18.00 ~ 20.00	1.00 ~ 20.00	8	24	25

Model: 25SFSTH



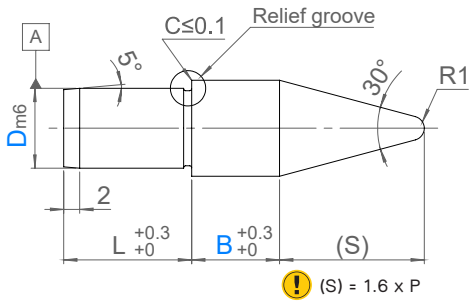

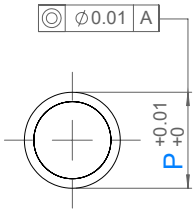

● Detials of undercut

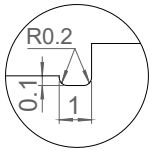

ORDER EXAMPLE: Model D - P - B → 25SFSTH10-15.05-2

Ⓜ SKS3
60 ~ 63HRC

Model	D m6		P 0.01 increments	B 0.1 increments	L
25SFSTH	4	+0.012 +0.004	4.00 ~ 8.00	1.00 ~ 12.00	12
	5		5.00 ~ 10.00	1.00 ~ 12.00	
	6		6.00 ~ 12.00	1.00 ~ 15.00	15
	8	+0.015 +0.006	8.00 ~ 14.00	1.00 ~ 15.00	
	10		10.00 ~ 16.00	1.00 ~ 20.00	20
	13	+0.018 +0.007	13.00 ~ 18.00	1.00 ~ 20.00	
	16		16.00 ~ 20.00	1.00 ~ 20.00	24

ชิ้นส่วนหาตำแหน่ง

Locating Pilot Pins - ไพล็อตพินล็อคตำแหน่ง

OIL FREE™



Model: 25PST

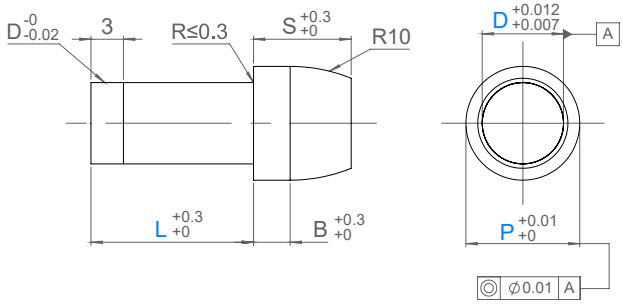

ORDER EXAMPLE: Model D - L - P
25PST5-15-7.05

Ⓜ SKS3
60 ~ 63HRC

Model	D	L	P 0.01 increments	B	S
25PST	1	12	1.50 ~ 3.00	1	4
	2	12 15	2.50 ~ 4.00		5
	3		4.00 ~ 6.00	2	6
	4		5.00 ~ 7.00		7
	5		6.00 ~ 8.00		
	6		7.00 ~ 9.00		8
	8	15	9.00 ~ 13.00	3	9
	10	18	11.00 ~ 15.00		



Model: 25PSTM

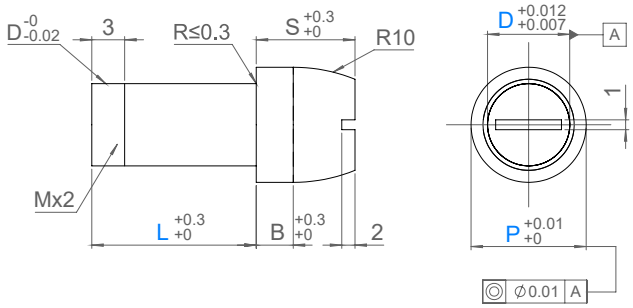

ORDER EXAMPLE: Model D - L - P
25PSTM8-15-9.05

Ⓜ SKS3
60 ~ 63HRC

Model	D	L	P 0.01 increments	B	S	M
25PSTM	5	12 15	6.00 ~ 8.00	2	7	3
	6		7.00 ~ 9.00		8	
	8	15 18	9.00 ~ 13.00	3	9	4
	10		11.00 ~ 15.00			5

Model: 25RFPP



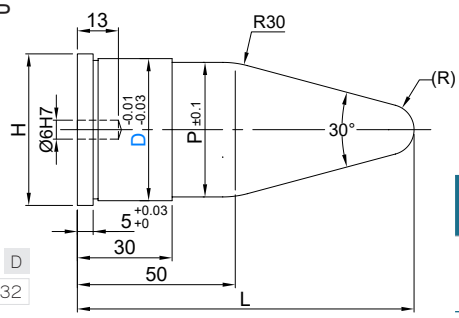

ORDER EXAMPLE: Model D
25RFPP32

Ⓜ SK3
55HRC ~

Model	D	H	L	R	P
25RFPP	32	35	90	5	29.5
	45	48	110	8	44.5

SUN RISE technologies
Tel: +662-324-3184-(89) Fax: +662-324-3190 / +662-324-3103
Website: www.sunrisegr.com Email: sale@sunrisegr.com

Locating Pilot Punchs - ไพล็อตพั้นช์ล็อคตำแหน่ง

OIL FREE™



Model	Material		Coating
25RTP	SKD11	60 ~ 63HRC	-
25T-RTP	SKD11	60 ~ 63HRC	3000HV

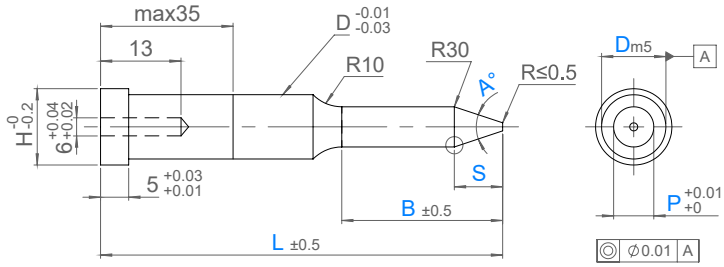

Details of ○

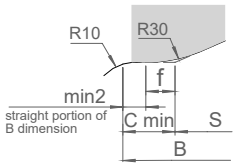

A	f	Cmin.
20°	2.624	5
30°	3.950	6
40°	5.967	8



Model	Material		Coating
25RTPE	SKD11	60 ~ 63HRC	-
25T-RTPE	SKD11	60 ~ 63HRC	3000HV

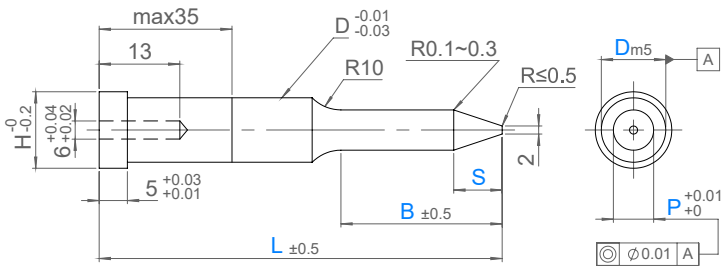

ORDER EXAMPLE: Model D - L - P - B - S - A
25RTP13-100-P10.05-B30-S10-A20

Model	D	L 1mm increments	P 0.01 increments	B 1mm increments	S 1mm increments	A	H
25RTP	10	70 ~ 200	6.00 ~ 9.99	20 ~ 100	10 ~ 50 S ≤ B - Cmin.	20 30 45	13
25RTP 25T-RTP	13		6.00 ~ 12.99				16
	16		8.00 ~ 15.99				19
	20		11.00 ~ 19.99				23
	25		16.00 ~ 24.99				28
25RTP	32		18.00 ~ 31.99				35

Model	D	L 1mm increments	P 0.01 increments	B 1mm increments	S 1mm increments	A	H
25RTPE	10	70 ~ 150	6.00 ~ 9.99	10 ~ 50	8 ~ 45 S ≤ B - 2	20 30 45	13
25RTPE 25T-RTPE	13		6.00 ~ 12.99				16
	16		8.00 ~ 15.99				19
	20		11.00 ~ 19.99				23
	25		16.00 ~ 24.99				28
25RTPE	32		18.00 ~ 31.99				35

ชิ้นส่วนหาตำแหน่ง

Locating Pins - พินล็อคตำแหน่ง

OIL FREE™



Model:
25DIKPA

M S45C

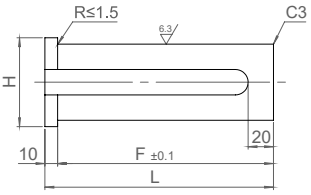

ORDER EXAMPLE | Model | D | 25DIKPA60

Model	D e9		H	F	L
25DIKPA	60	-0.060 -0.134	70	170	180



Model:
25DIKPB

M S45C

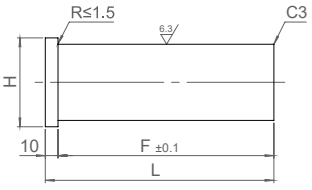

Model	D e9		H	F	L
25DIKPB	50	-0.050 -0.112	60	145	155
	60	-0.060 -0.134	70	170	180



Model:
25DLPA

M S45C
40 ~ 45HRC

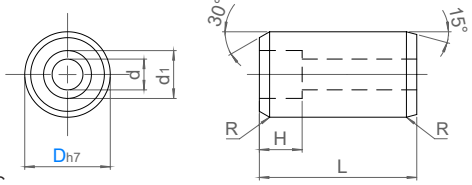

Model	D h7		L	R	d	d1	H
25DLPA	20	0 -0.021	46	3	11	-	-
	25		56			17.5	12
	32	0 -0.025	70	5			24



Model:
25TLPA

M S45C
40 ~ 45HRC

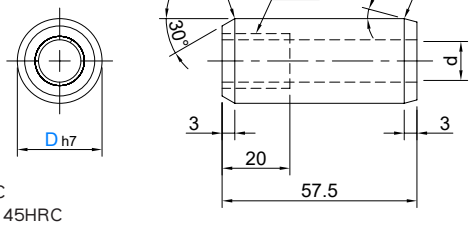

Model	D h7		L	R	d
25TLPA	20	0 -0.021	45	3	10.5



Model:
25TLPB

M S45C
40 ~ 45HRC

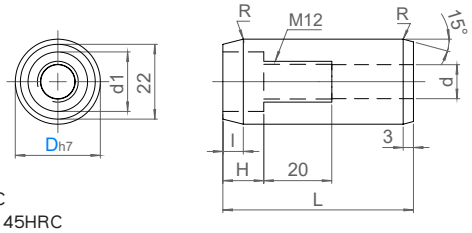

Model	D h7		L	R	d	d1	H	ℓ
25TLPB	25	0 -0.021	56	3	10.5	17.5	12	6
	32	0 -0.025	65	5			24	10



Model:
25TLPC

M S45C
40 ~ 45HRC

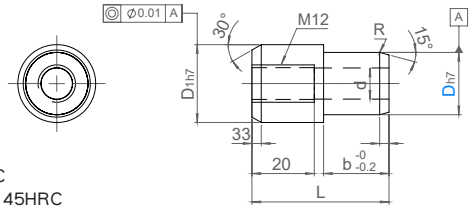

Model	D h7		D1 h7		L	R	d	b
25TLPC	20	0 -0.021	25	0 -0.021	44	3	10.5	21

SUN RISE technologies
Tel: +662-324-3184-(89) Fax: +662-324-3190 / +662-324-3103
Website: www.sunrisegr.com Email: sale@sunrisegr.com

Locating Pins - พินล็อคตำแหน่ง

OIL FREE™



Model: 25LPU

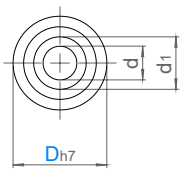

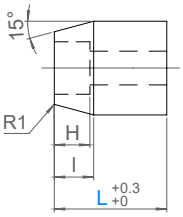

M S45C

ORDER EXAMPLE: Model D - L — 25LPU32-30

Model	D h7		L	l	d	d1	H
25LPU	25	0 -0.021	25	12	9	14	11
			30				
	32	0 -0.025	30	15	11	17.5	13
			35				
	40		35	18	14	20	15
			40				



Model: 25LPL

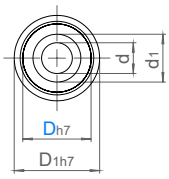

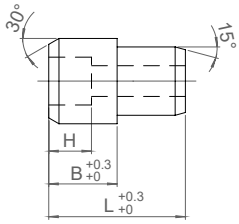

M S45C
40 - 45HRC

ORDER EXAMPLE: Model D — 25LPL32

Model	D h7		D1 h7		L	B	d	d1	H
25LPL	20	0 -0.021	25	0 -0.021	40	20	9	14	11
	25		32		50	25	11	17.5	12
	32	0 -0.025	40	0 -0.025	70	35	11	17.5	24

Locating Pins - พินล็อคตำแหน่ง

OIL FREE™



Model: 25IKPDA

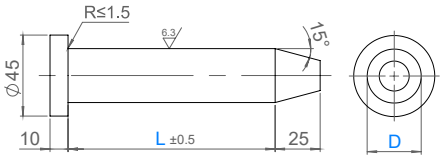



Model: 25IKPDB

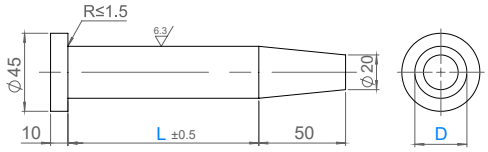

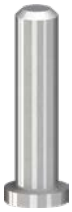

Model: 25IKPDC

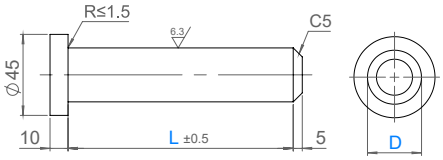



Model: 25IKPE

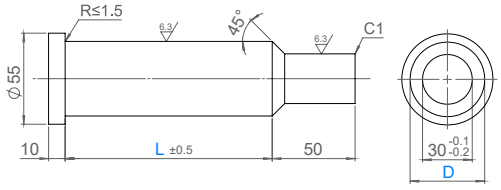

ORDER EXAMPLE: Model D - L — 25IKPDA30-150

M S45C

Model	D		L 5mm increments
25IKPDA 25IKPDB 25IKPDC	30	-0.1 -0.2	110 - 200
25IKPE	45	-0.1 -0.2	110 - 200

Pre-Holding Push Pin Sets - ชุดพรีโฮลดิ้งพุชพิน

OIL FREE™



Model: 25S-PAP
ปลายเหล็กเหนียว
Steel Tip

Model: 25S-PAP-U
ปลายยูรีเทน
Urethane Tip

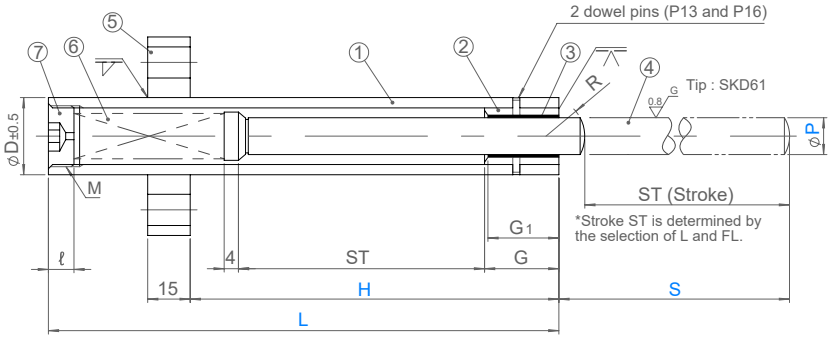

⑤Mounting flange

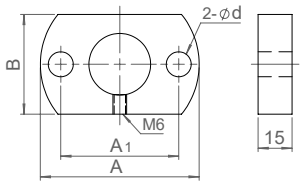

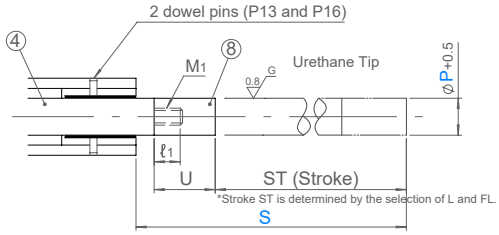

①②⑤ Ⓜ SS400
③ Oil Free™ Bush
④ Ⓜ SKD61 + Nitrile Coating
40 ~ 50HRC
900HV ~ (surface)
⑥ Ⓜ SWP-A
⑦ Ⓜ S45C
⑧ Ⓜ Urethane (A90)

ORDER EXAMPLE Model P - S - L - H - FL
25S-PAP16-150-220-190-200

Model	P	S	L 10mm increments	H 10mm increments	Spring FL	Case					Pushing Pin				Mounting Flange			
						D	G	G1	ℓ	M	R	U	M1	ℓ1	A	A1	B	d
25S-PAP 25S-PAP-U	13	100 150 200	150 ~ 250	0 ≤ H ≤ L - 20	90 125 150 175 200 250	27.2	22	20	10	22	20	15	M6	9	70	52	40	11
	16	100 150 200 250 300	150 ~ 350	0 ≤ H ≤ L - 20	90 125 150 175 200 250 300 350	34	27	25	10	26	25	20	M8	12	80	60	50	11
	20	100 150 200 250 300 350 400 450 500	180 ~ 500	0 ≤ H ≤ L - 20	90 150 175 200 250 300 350 400 425 450 500	42.7	32	30	12	33	30	25	M10	15	90	70	60	13

SUN RISE technologies
Tel: +662-324-3184-(89) Fax: +662-324-3190 / +662-324-3103
Website: www.sunrisegr.com Email: sale@sunrisegr.com

Pre-Holding Push Pin Sets (Economy) - ชุดพรีโฮลดิ้งพุชพิน

OF OIL FREE™



Model: 25S-PAP-E
ปลายเหล็กเหนียว
Steel Tip

Model: 25S-PAP-EU
ปลายยูรีเทน
Urethane Tip

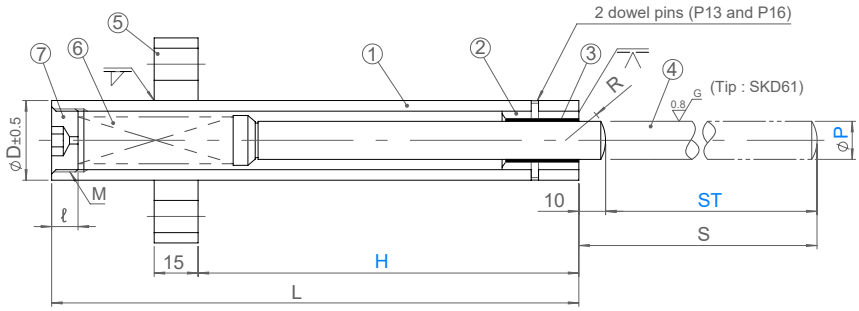

⑤Mounting flange

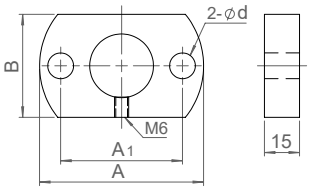

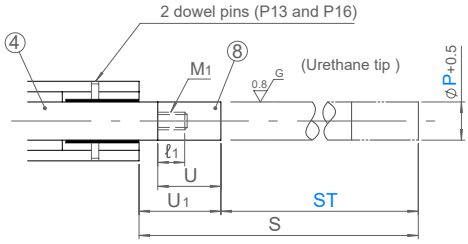

①②⑤ Ⓜ SS400
③ Oil Free™ Bush
④ Ⓜ SKD61 + Nitrile Coating
40 ~ 50HRC
900HV ~ (surface)

⑥ Ⓜ SWP-A
⑦ Ⓜ S45C
⑧ Ⓜ Urethane (A90)

ORDER EXAMPLE Model P-ST-H
25S-PAP-E16-50-90

P	ST	H 1mm increments	Case			Pushing Pin					Mounting Flange				FL	Spring Constant N/mm (kgf/mm)	Initial Load	Max Load	S		L
			D	ℓ	M	R	U	U1	M1	ℓ1	A	A1	B	d			N (kgf)		Steel	Urethane	
13	50	0 - 95	27.2	10	22	20	15	20	M6	9	70	52	40	11	90	0.63 (0.064)	7.8 (0.8)	39.2 (4.0)	60	70	115
	100	0 - 170													175	0.32 (0.033)			110	120	190
	150	0 - 250													270	0.21 (0.021)			160	170	270
16	50	0 - 100	34	10	26	25	20	25	M8	12	80	60	50	11	90	0.80 (0.082)	9.8 (1.0)	49 (5.0)	60	75	120
	100	0 - 175													175	0.39 (0.040)			110	125	195
	150	0 - 255													270	0.26 (0.027)			160	175	275
	200	0 - 330													350	0.20 (0.020)	8.8 (0.9)		210	225	350
20	50	0 - 110	42.7	12	33	30	25	30	M10	15	90	70	60	13	90	0.95 (0.097)	9.8 (1.0)	58.8 (6.0)	60	80	130
	100	0 - 185													175	0.48 (0.049)			110	130	205
	150	0 - 260													260	0.32 (0.033)			160	180	280
	200	0 - 340													330	0.23 (0.024)			210	230	360
	250	0 - 410													425	0.20 (0.020)	8.8 (0.9)		260	280	430

ชิ้นส่วนหาตำแหน่ง

Pre-Holding Push Pin Sets (Long Stroke) - ชุดพรีโฮลดิ้งพุชพิน

OF OIL FREE™



	แบบสปริง Spring Type	แบบสปริง + น้ำหนักตายตัว Spring + Dead Weight
ปลายเหล็กเหนียว Steel Tip	Model: 25SD-PAP-S	Model: 25SD-PAGP-S
ปลายยูรีเทน Urethane Tip	Model: 25SD-PAP-U	Model: 25SD-PAGP-U

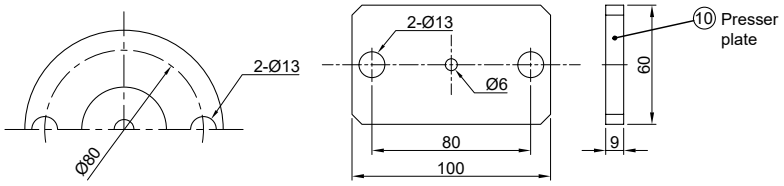

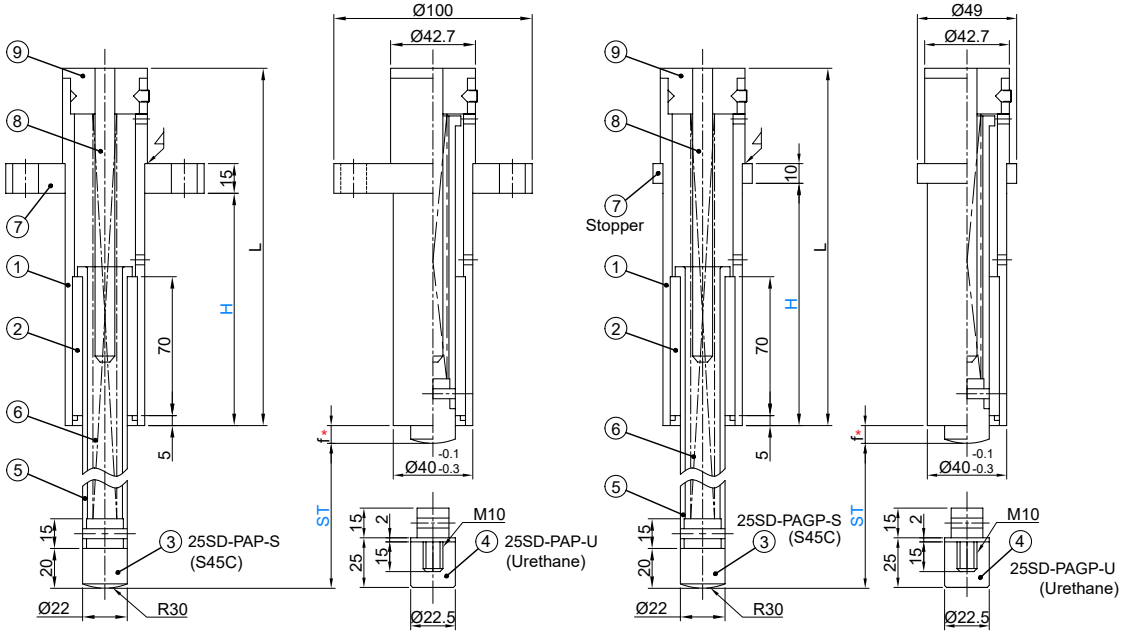

Tip	f
S45C	10
Urethane	15

①⑤⑧⑨⑩ Ⓜ SS400
② Ⓜ BC6
③ Ⓜ S45C 55HRC ~ (Induction Hardened)
④ Ⓜ Urethane (A90)
⑥ Ⓜ SWP-A
⑦ Ⓜ S45C

ORDER EXAMPLE: Model ST- H → 25SD-PAP-S200-200

Model	Stroke ST	H 1mm increments	Spring Constant N/mm (kgf/mm)	Initial Load N (kgf)	Max Load N (kgf)	Weight (g)	L
25SD-PAP-S 25SD-PAP-U (Spring Type) 25SD-PAGP-S 25SD-PAGP-U (Spring+Dead Weight)	200	90 ~ 260	0.29 (0.029)	10.8 (1.1)	67 (6.9)	3350	312
	220	90 ~ 290	0.26 (0.026)			3800	338
	250	90 ~ 310	0.24 (0.024)	8.8 (0.9)		4020	364
	270	90 ~ 340	0.22 (0.022)			4180	390
	300	90 ~ 360	0.20 (0.021)	6.9 (0.7)		4400	414

Tel: +662-324-3184-(89) Fax: +662-324-3190 / +662-324-3103
Website: www.sunrisegr.com Email: sale@sunrisegr.com

Pre-Holding Push Pin Sets (Lock Mechanism) - ชุดพรีโฮลดิ้งพุชพิน

OF OIL FREE™



ปลายเหล็กเหนียว
Steel Tip — Model: 25SD-PAP-Z-S

ปลายยูรีเทน
Urethane Tip — Model: 25SD-PAP-Z-U

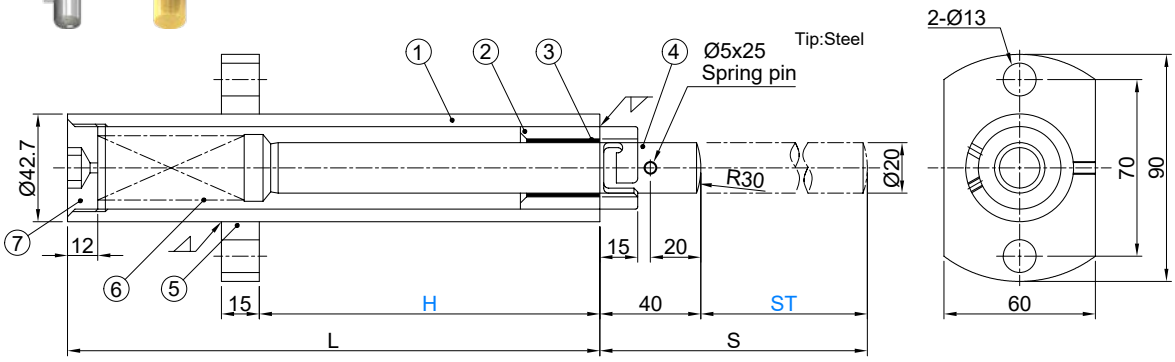

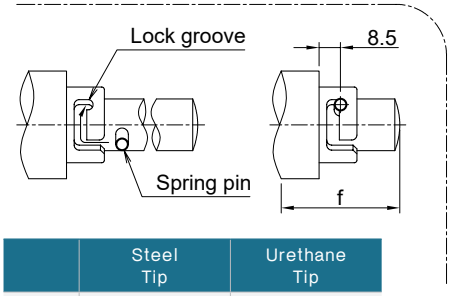

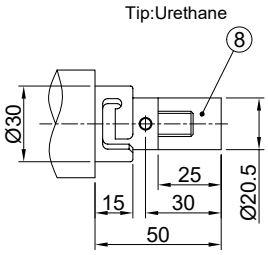

	Steel Tip	Urethane Tip
f	28.5	38.5

①②⑤⑦ Ⓜ SS400
③ Oil Free™ Bush
④ SKD61+Nitrile Coating
40 ~ 50HRC
900HV (Surface)

⑥ Ⓜ SWP-A
⑧ Urethane (A90)

ORDER EXAMPLE — Model No - ST - H
25SD-PAP-Z-S20-100-120

Model	No.	ST	H 1mm increments	Spring Constant N/mm (kgf/mm)	Initial Load	Max Load	S		L
					N (kgf)		Steel	Urethane	
25SD-PAP-Z-S (Steel Tip) 25SD-PAP-Z-U (Urethane Tip)	20	50	0 ~ 130	0.88 (0.090)	0	44.1 (4.5)	90	100	150
		100	0 ~ 190	0.49 (0.050)		49.0 (5.0)	140	150	210
		150	0 ~ 265	0.32 (0.033)		49.0 (5.0)	190	200	285
		200	0 ~ 335	0.28 (0.029)		55.9 (5.7)	240	250	355
		250	0 ~ 395	0.24 (0.024)		54.9 (5.6)	290	300	415

ชิ้นส่วนหาตำแหน่ง

Pre-Holding Push Pin Sets (Air Hole) - ชุดพรีโฮลดิ้งพุชพิน

OIL FREE™



ปลายเหล็กเหนียว
Steel Tip — Model: 25SD-PAEA-S

ปลายยูรีเทน
Urethane Tip — Model: 25SD-PAEA-U

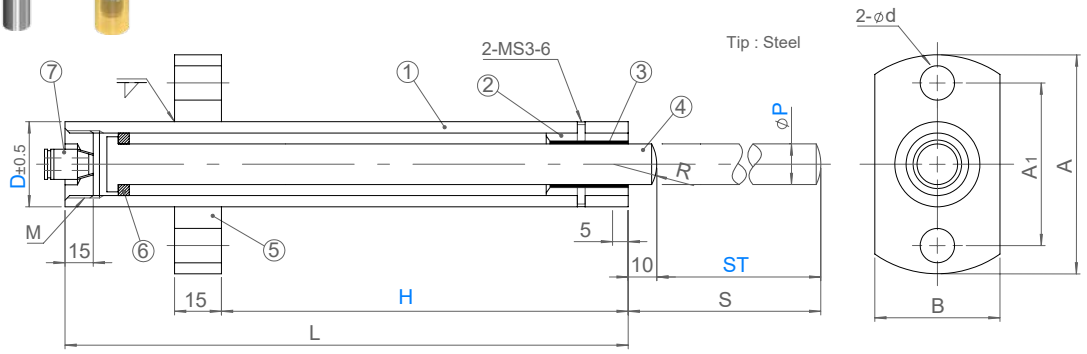

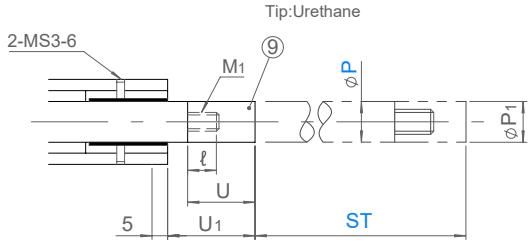

①②⑤ Ⓜ SS400
③ Oil Free™ Bush
④ Ⓜ SKD61+Nitrile Coating
40 ~ 50HRC
900HV (Surface)

⑥⑨ Ⓜ Urethane (A90)
⑦ Air Quick Fitting Joint

ORDER EXAMPLE Model P - ST - H
25SD-PAEA-S13-100-100

P	ST	H 1mm increments	Case			Pushing Pins						Mounting Flange				Pressing Load N (kgf)			S		L
			D	M	G	R	U	U1	I	M1	P1	A	A1	B	d	0.3MPa	0.4MPa	0.5MPa	Steel	Urethane	
13	50	0 ~ 80	27.2	22	22	20	15	20	9	M6	13.5	70	52	40	11	41.2 (4.2)	54.9 (5.6)	66.7 (6.8)	60	70	100
	100	0 ~ 130																	110	120	150
	150	0 ~ 180																	160	170	200
16	50	0 ~ 85	34	26	27	25	20	25	12	M8	16.5	80	60	50	11	63.7 (6.5)	83.4 (8.5)	103 (10.5)	60	75	105
	100	0 ~ 135																	110	125	155
	150	0 ~ 185																	160	175	205
	200	0 ~ 235																	210	225	235

SUN RISE technologies
Tel: +662-324-3184-(89) Fax: +662-324-3190 / +662-324-3103
Website: www.sunrisegr.com Email: sale@sunrisegr.com

Pushing Pin Sets - ชุดพุชพิน

OIL FREE™



Model: 25S-PSPH
(①②③④)

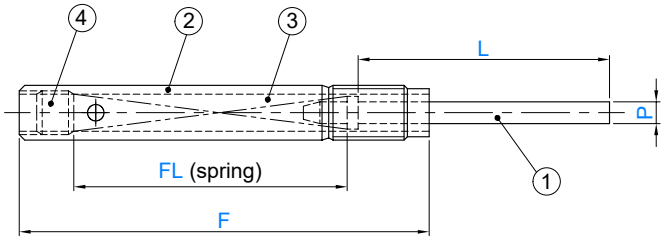

Model: 25S-PSH
(①)

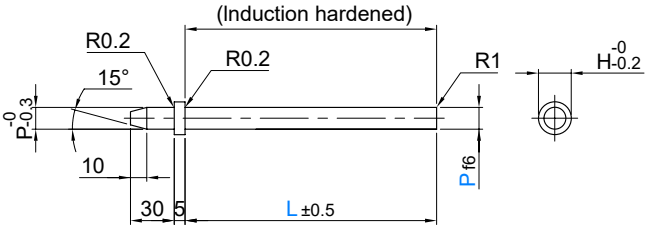

② (Spring case)

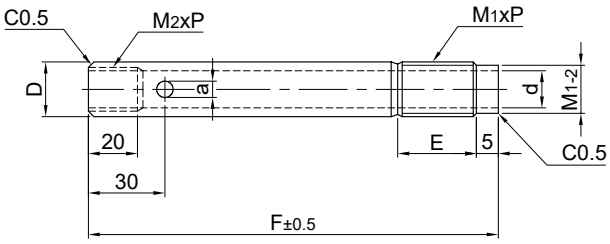

① Ⓜ S45C
50HRC ~
(Induction Hardened)
② Ⓜ Steel Tube

ORDER EXAMPLE Model P - L - F - FL
25S-PSPH10-100-150-100

Model	P f6		L	F	FL	H	Spring Case					
							D	M1xP	E	M2xP	a	d
25S-PSPH 25S-PSH	8	-0.013 -0.022	100 150 200	150 200 250 300	100 125 150 175 200 250 300	13	21.7	22x1.5	35	16x1.5	7	14.3
	10					16	27.2	27x1.5	40	22x1.5	10	19.4
	13	-0.016 -0.027				20	32	30x1.5	45	24x1.5	10	22
	16					23	34	33x1.5	50	28x1.5	12	26.2

Push Out Pins - พุชเอาท์พิน

OIL FREE™



N (ทรงปกติ / Normal Shape)

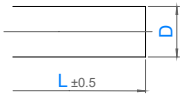



R (ทรงมน / Round Shape)

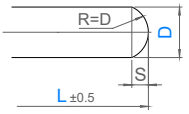



U (ปลายยูรีเทน/ Urethane Tip)

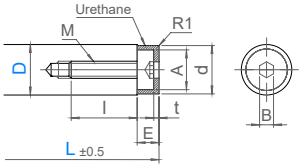

ปลายเหล็กเหนียว
Steel Tip

Model: 25POP

ปลายชุบแข็ง
Induction Hardened Tip

Model: 25HPOP

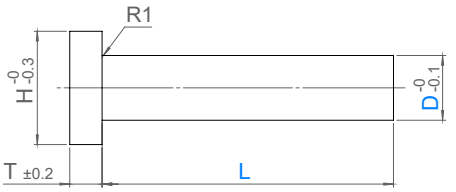

D	M	ℓ	t	d	A	B	E
8	3	5	3	7.5	5.5	2.5	6
10	4	6	3	9.5	7	3	7
13	5	7	4	12.5	8.5	4	9
16	6	8	4	15	10	5	10
20	8	10	5	19	13	6	13
25	10	12	5	24	16	8	15

ORDER EXAMPLE | Model | Tip - D - L | 25HPOPN20-100

M 25POP : S45C 20 ~ 25HRC
25HPOP : S45C 50HRC ~

Model	Tip Shape	D	L 10mm increments	H	T
25POP 25HPOP (Induction Hardened)	N R U	8	30 ~ 120	18	8
		10	40 ~ 150	25	
		13	50 ~ 180	28	
		16	50 ~ 180	30	10
		20	50 ~ 200	35	
		25	50 ~ 200	40	

Drawing Jector Pins - พุชเอาท์พินสำหรับงานขึ้นรูป

OIL FREE™



Model: 25DHPA

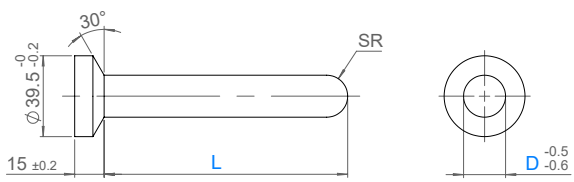

M S45C
55HRC ~
(Induction Hardened)

ORDER EXAMPLE | Model | D - L | 25DHPA20-170

Model	D	L
25DHPA	20	120
		170
		220
	26	200

Model:
25DHPF100



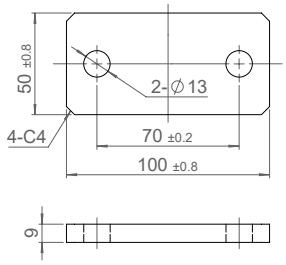

M SS400

Order Code
25DHPF100

SUN RISE technologies
Tel: +662-324-3184-(89) Fax: +662-324-3190 / +662-324-3103
Website: www.sunrisegr.com Email: sale@sunrisegr.com

Skid Brackets - ตัวยึดกันเลื่อน

OIL FREE™



Model:
25STB (①+②)
25STB-N (①)

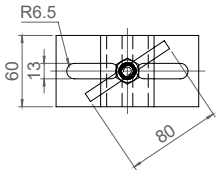

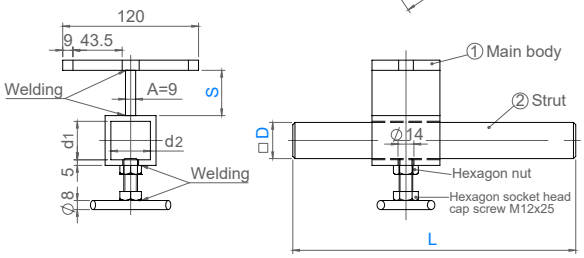



Model:
25STBY (①+②)
25STBY-N (①)

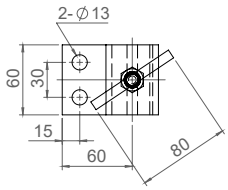

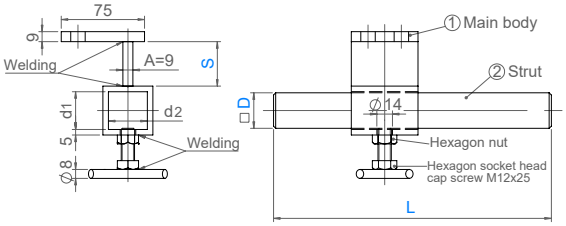

ORDER EXAMPLE: Model | D - L - S | 25STB20-100-100

Ⓜ SS400
Blacken (Fe3O4)

Model	D	10mm increments		d1	d2
		L	S		
25STB 25STB-N 25STBY 25STBY-N	20	100 - 300	0 - 150	33	33
	32			45	44



Model:
25MRTB (①+②)
25MRTB-N (①)

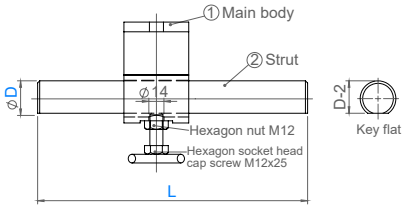

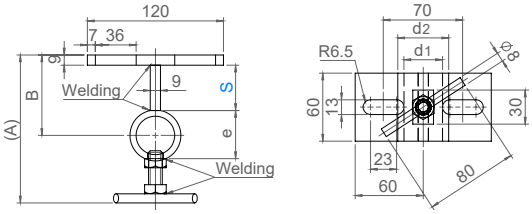



Model:
25MRTBY (①+②)
25MRTBY-N (①)

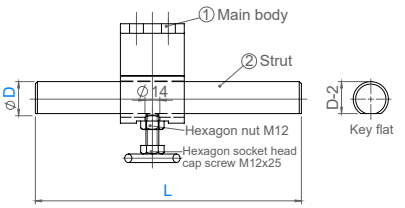

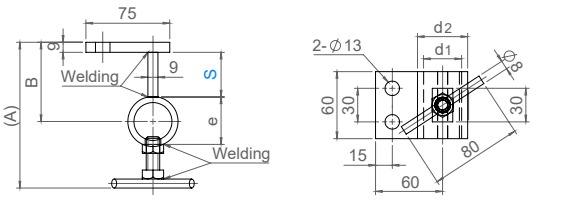

ORDER EXAMPLE: Model | D - L - S | 25MRTB20-100-100

Ⓜ SS400
Blacken (Fe3O4)

Model	D	10mm increments		e	d1	d2
		L	S			
25MRTB 25MRTB-N 25MRTBY 25MRTBY-N	20	100 - 300	0 - 150	26	21	30
	30			37.5	32	40

เคลื่อนย้ายแม่พิมพ์
TRANSFERS SYSTEM

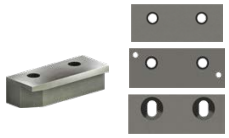

Name	Material Guides
Model	25STG / 25STGN / 25STGE
Page	153



Name	Material Guide Roller Sets
Model	25SGDRT(A,B) / 25SEGDR
Page	154



Name	Stock Lifter
Model	25SSRL
Page	155



Name	Material Feeder
Model	25ZORW
Page	155



Name	Sheet Lifter
Model	25SLC /25SLCE
Page	156

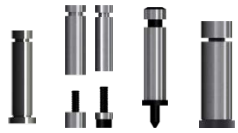

Name	Guide Lifters
Model	25GLP / 25GLH / 25GLR / 25AGL / 25GLSZ
Page	157 - 159



Name	Lifter Pins
Model	25LPAH / 25LHAH
Page	159

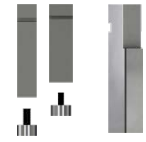

Name	Block Guide Lifters
Model	25GLB / 25GLBK
Page	160



Name	Guide Lifters w/ Air Hole
Model	25GLJS / 25LJS
Page	161



Name	Block Lifter
Model	25BLR
Page	161



Name	Lifter Pins
Model	25LPH
Page	162



Name	Resin Lifter Pins
Model	25JLP
Page	162



Name	Lifter Pins with Relief Hole
Model	25LHH / 25LHHV
Page	163

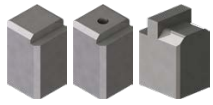

Name	Block Lifters
Model	25BLL / 25BLH / 25BLLF
Page	164

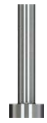

Name	Knockout Pins
Model	25KOP
Page	165



Name	Push Pins
Model	25JPWH
Page	165



Name	Material Guide Units
Model	25ZGUA / 25ZGUB / 25SUK-A / 25SUK-B
Page	166 - 168



Name	Stock Guide
Model	25SBM / 25SBA
Page	169



Name	Lifter Units
Model	25LTHS / 25CLTH
Page	170



Name	H-Type Lifter Unit
Model	25SHGC / 25SHGT / 25SHGF / 25SHLS
Page	171 - 176



Name	Mini Lifter Unit
Model	25MLGT
Page	177

Tel: +662-030-0092 Fax: +662-324-3190 / +662-324-3103
Website: www.sunrisegr.com Email: sale@sunrisegr.com





Name	Embed Lifter Units	Lifter Guide Post Sets
Model	25SFL / 25SFLK / 25SFLG / 25SKIL / 25LGIL / 25PGLI	25LGPS / 25LGPPS
Page	178 - 183	184





Name	Lifter Components	Bell Crank Lifter Parts
Model	25SKIL-B / 25SFSG / 25SFRG /25SFLPA	25SBCR / 25SBCH / 25SBCBC / 25SBCL / 25SBCS / 25SBCJP / 25SBCBH / 25SBCP / 25SBCCR
Page	185 - 186	187 - 192



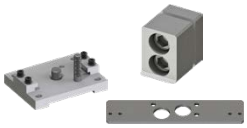



Name	Pusher Units	Pusher Unit Components	Shredder Units
Model	25SODP / 25SOSP / 25APSG-B / 25APSG	25ADR / 25SO-PSH / 25CNP-APSG	25SDA / 25SDB
Page	193 - 195	196	197 - 198











Name	Hook for Transport	Lifting Bars	Cast-In Lifting Bolts	Bolt Die Hooks	Plate Type Die Hooks
Model	25DKLH / 25DVJ	25HLFB	25CSN	25HBT / 25HBTL	25HPT / 25HPTL
Page	199	199	200	200	201 - 202







Name	Roller Carriers	Roller Carriers Fit Type	Ball Roller Carriers
Model	25BCR	25BCRP	25CHI
Page	203	203	204

Material Guides - ไกด์แผ่นวัตถุดิบ

OIL FREE™



L (ซ้าย)
Direction

R (ขวา)
Direction



Model: 25STG
รูกลม
Round Holes

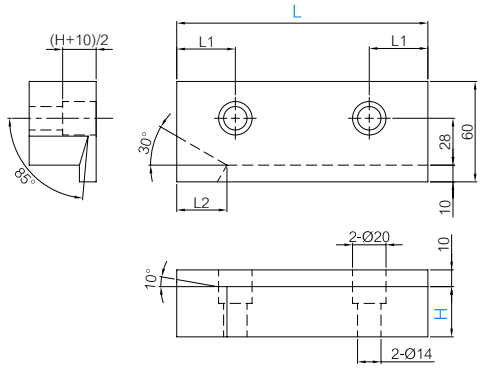



Model: 25STGN
รูกลม มีรูโดเวลพิน
Round Holes w/ Dowel Holes

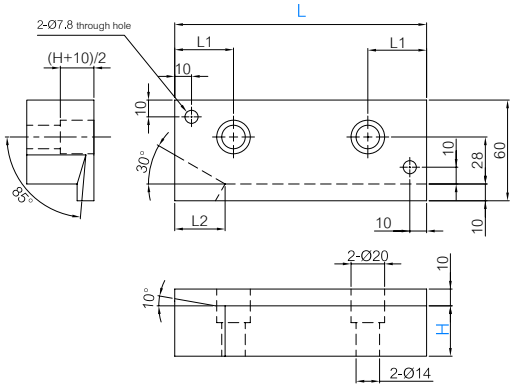



Model: 25STGE
รูสล็อต
Slot Holes

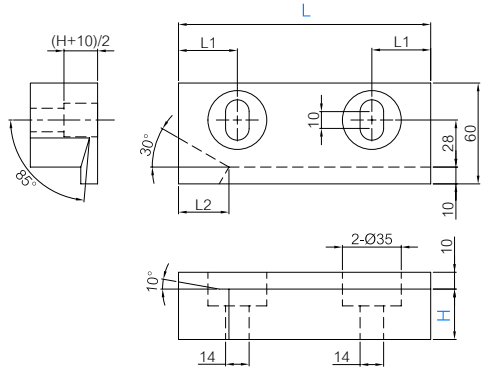

ORDER EXAMPLE | Model - Direction - L - H | 25STG-L-100-60

S45C (55HRC~)
Induction Harden

1. เลือกแบบรูยึด
2. เลือกด้านซ้าย (L) หรือ ขวา (R)
3. เลือกความยาว และความสูง

1. Choose mounting hole type
2. Choose direction (L) or (R)
3. Choose Length and Height

Model	Direction	L	H						L1	L2
25STG 25STGN 25STGE	L R	100	20	30	40	50	60	70	25	30
		150	20	30	40	50	60	70	35	30

SUN RISE technologies
Tel: +662-030-0092 Fax: +662-324-3190 / +662-324-3103
Website: www.sunrisegr.com Email: sale@sunrisegr.com

Material Guide Roller Sets - ชุดไกด์โรลเลอร์

OIL FREE™

เดี่ยว
Single

คู่
Double

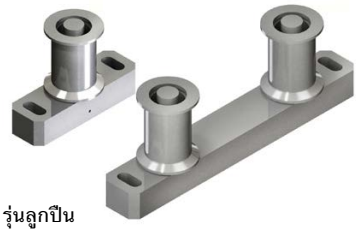

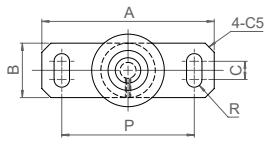

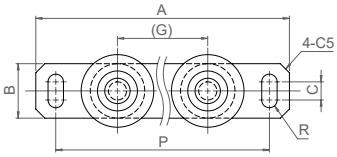

รุ่นลูกปืน
Bearing Type

① Ⓜ SCM415 (55HRC-)
② Ⓜ SS400
Bolt Included

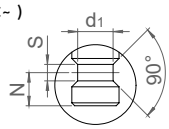

Details A

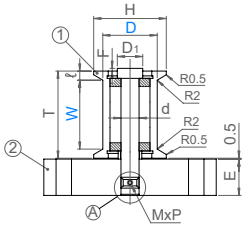

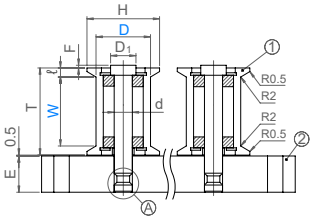



รุ่นออยฟรี
OIL FREE™ Type

① Ⓜ SCM415 (55HRC-)
② Sprue Retainer
③ Bolt
④ Bushing
⑤ C Snap Ring
⑥ Spacer
⑦ Spring Washer
⑧ Ⓜ SS400

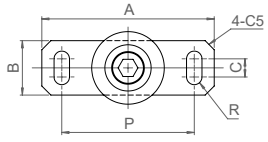

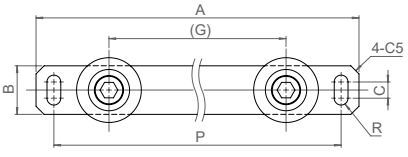

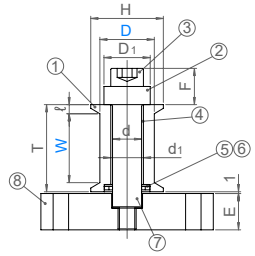

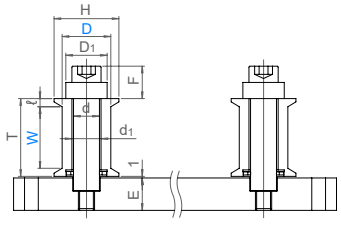

ประเภท Type		แบบเดี่ยว Single Model	แบบคู่ Double Model	เฉพาะล้อ Wheel Only
Bearing	Needle Bearing	25SGDRTA	25SGDRTAW	25SGDRTAT
	Ball Bearing	25SGDRTB	25SGDRTBW	25SGDRTBT
OIL FREE™	Bushing	25SEGDR	25SEGDRW	25SEGDRT

ORDER EXAMPLE Model D - W
25SGDRTA55-38

Model	D	W	T	H	ℓ	d	A		B	C	P		R	E	F	G	D1
							Single	Double			Single	Double				Double	
25SGDRTA 25SGDRTAW	30	38	48	40	5	10	95	395	30	10	73	373	5.5	20	1.5	300	14
	55	38	54	75	8	25	145	445	55	20	115	415	6.5	35	5.5	300	32
	55	70	86	75	8	25	145	445	55	20	115	415	6.5	35	5.5	300	32
25SGDRTB 25SGDRTBW	30	38	48	40	5	9	95	395	30	10	73	373	5.5	20	1.5	300	12
	55	38	54	75	8	20	145	445	55	20	115	415	6.5	35	5.5	300	32
	55	70	86	75	8	20	145	445	55	20	115	415	6.5	35	5.5	300	32
25SEGDR 25SEGDRW	30	38	48	40	5	16	95	395	30	10	73	373	5.5	20	19	300	24
	55	38	54	75	8	25	145	445	55	20	115	415	6.5	35	30.5	300	36
	55	70	86	75	8	25	145	445	55	20	115	415	6.5	35	30.5	300	36



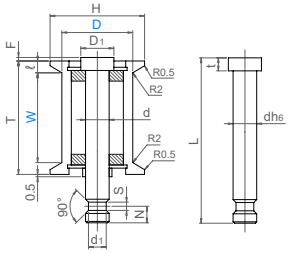

รุ่นลูกปืน
Bearing Type



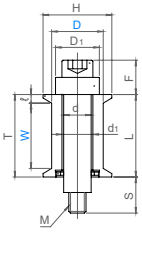

รุ่นออยฟรี
OIL FREE™ Type

Model	D	W	L	t	d1	S	N	M
25SGDRTAT	30	38	67	5.5	8	2.5	7	-
	55	38	92	9.5	22	5	17	
	55	70	124	9.5	22	5	17	
25SGDRTBT	30	38	67	5.5	7	2.5	7	-
	55	38	92	9.5	17	5	17	
	55	70	124	9.5	17	5	17	
25SEGDRT	30	38	52	-	18	15	7	M10
	55	38	61		28	26	17	M16
	55	70	93		28	24	17	M16

ระบบเคลื่อนย้ายแม่พิมพ์

Stock Lifter Unit - สต๊อคลิฟเตอร์

OIL FREE™

Model: 25SSRL



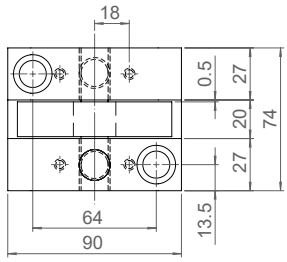

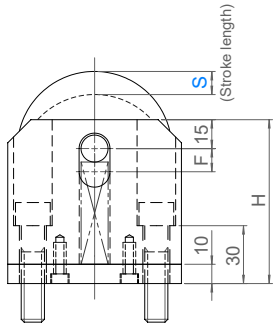

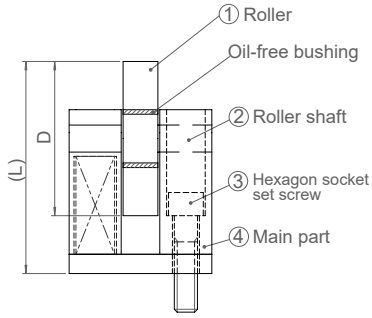

① Ⓜ SKS3 (55~58HRC)
② SUJ2 (55~58HRC)
③ Bolt 12-50 (x2)
④ Ⓜ SS400
⑤ SS400
⑥ Bolt 6-15 (x4)
⑦ Coil Spring

ORDER EXAMPLE: Model S — 25SSRL20

Model	S	D	H	F	L	Min Load		Max Load	
						N	kgf	N	kgf
25SSRL	10	60	75	12	90	165N	16.8kgf	439N	44.8kgf
	20	80	95	22	120	108N	11kgf	469N	47.8kgf

Material Feeder Unit - ชุดฟีดวัสดุ

OIL FREE™

Model: 25ZORW



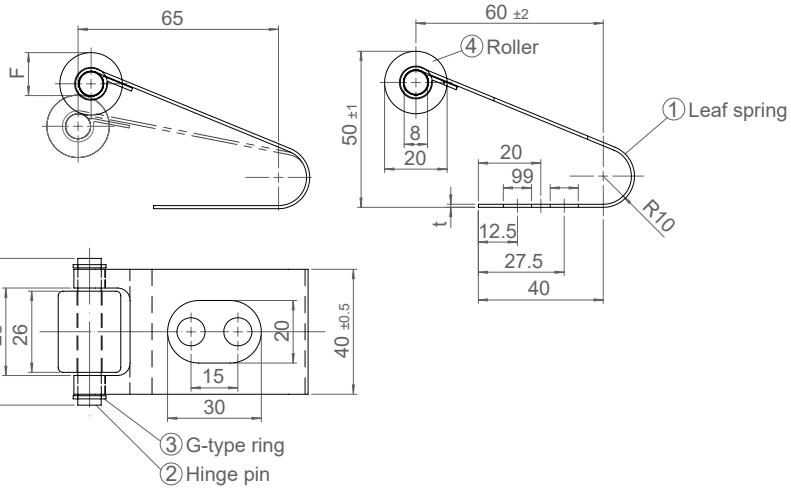

① Ⓜ SK5M
② S45C
③ G-8 Ring
④ Wheel (Steel or Resin)

Type	Order Code	t	Load	
			N/mm	kgf/mm
ล้อโลหะ Steel Wheel (S45C 45HRC~)	25ZORWMS	1.4	5.88N/mm	0.60kgf/mm
	25ZORWHS	1.6	8.43N/mm	0.86kgf/mm
ล้อเรซิน Resin Wheel (POM)	25ZORWMP	1.4	5.88N/mm	0.60kgf/mm
	25ZORWHP	1.6	8.43N/mm	0.86kgf/mm

SUN RISE technologies
Tel: +662-030-0092 Fax: +662-324-3190 / +662-324-3103
Website: www.sunrisegr.com Email: sale@sunrisegr.com

Sheet Lifters - ชีทลิฟเตอร์

OF OIL FREE™



Model: 25SLCE-I

① Ⓜ S45C

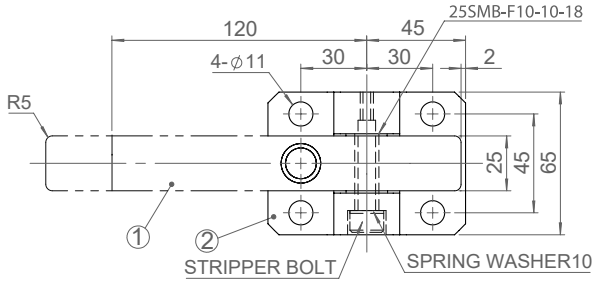



Model: 25SLCE-W

① Ⓜ Copper Alloy

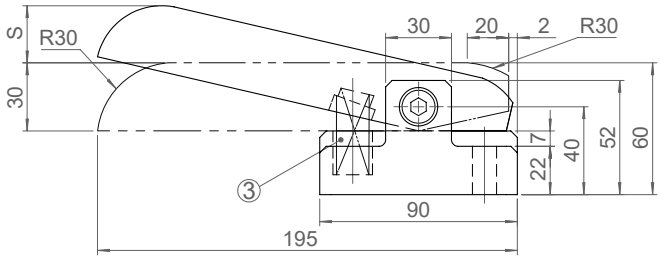



Model: 25SLC-W

① Ⓜ Copper Alloy

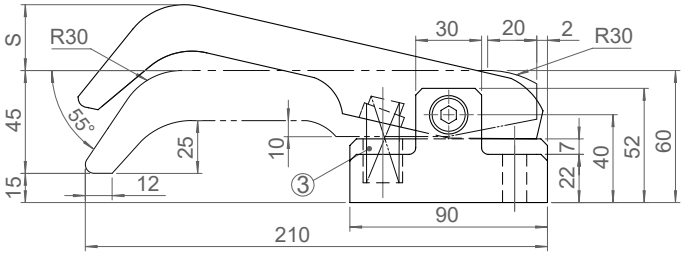

ORDER EXAMPLE | Model | # | ② Ⓜ FC250 | ③ Coil Spring | 25SLC-W20U

Model	#	Coil Spring		Stroke S	Min Lifting Load		Max Lifting Load		Min Spring Load		Max Spring Load	
		DxL	Color		N	kgf	N	kgf	N	kgf	N	kgf
25SLCE-I 25SLCE-W 25SLC-W	20U	17x50	Light Blue	20	18.3N	1.9kgf	24.5N	2.5kgf	73N	7.5kgf	98N	10kgf
	20R	17x50	Ivory			3kgf	39.2N	4kgf	117N	12kgf	157N	16kgf
	20S	17x50	Orange		54.9N	5.6kgf	73.5N	7.5kgf	220N	22.5kgf	294N	30kgf
	25U	17x50	Light Blue	25	16.9N	1.7kgf	24.5N	2.5kgf	67N	6.9kgf	98N	10kgf
	25R	17x50	Ivory		27N	2.8kgf	39.2N	4kgf	108N	11kgf	157N	16kgf
	25S	17x50	Orange		51N	5.2kgf	73.5N	7.5kgf	202N	20.6kgf	294N	30kgf

การปรับแต่งเสริม | Options

OPTION EXAMPLE | Model | # - Option | 25SLCE-I20U-HTC

สำหรับรุ่นวัสดุ S45C เท่านั้น
Only for S45C material model

Description	Location	Option
Induction Harden	Sheet Bar	HTC
Nickle Plating	Sheet Bar	HTM

Guide Lifter - ไกด์ลิฟเตอร์

OIL FREE™



Ⓜ SKS3
53-58HRC
⚠ ชุบแข็งส่วนหัว สูงสุด 45HRC
Head part harden up to 45HRC

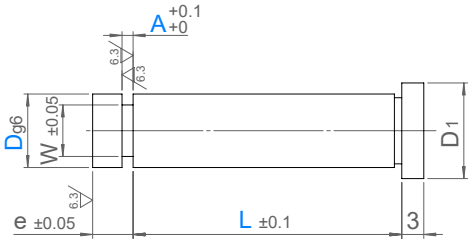

ORDER EXAMPLE Model D - L - A 25GLP8-25-2.0

Model: 25GLP

แบบมาตรฐาน เลือกเฉพาะค่า L / A
Standard Type, choose only L / A

Model	D g6		L															A	e	W	D1
25GLP	4	-0.004 -0.012	10	15	20	22	25	28	30	33	35	36	40	45	50			0.5 / 0.8 / 1.0	5	2	6
	6		10	15	20	22	25	28	30	33	35	36	40	45	50			0.5 / 0.8 / 1.0 / 1.6	7	3.6	8
	8	-0.005 -0.014	10	15	20	22	25	28	30	33	35	36	40	45	50	55	60	1.0 / 1.6 / 2.0		5	10
	10				20	22	25	28	30	33	35	36	40	45	50	55	60	1.6 / 2.0 / 2.5		6	13
	13	-0.006 -0.017			20	22	25	28	30	33	35	36	40	45	50	55	60	2.0 / 2.5 / 3.6		7	16
	16								30	33	35	36	40	45	50	55	60	70	2.0 / 2.5 / 4.0	12	8	19
	20	-0.007 -0.020								33	35	36	40	45	50	55	60	70	3.6 / 5.0		10	23

ORDER EXAMPLE Model D - L - A 25GLH8-50.5-2.5

Model: 25GLH

แบบเลือกค่า L / A ขึ้นทีละ 0.1มม.
Increment Type, choose L / A increment by 0.1mm

Model	D	g6	0.1mm increment		e	W	D1
			L	A			
25GLH	4	-0.004 -0.012	10.0 - 55.0	0.5 - 2.0	5	2	6
	6		10.0 - 75.0	0.5 - 3.0	7	3.6	8
	8	-0.005 -0.014	10.0 - 75.0	0.7 - 4.5		5	10
	10		10.0 - 90.0	0.7 - 4.5		6	13
	13	-0.006 -0.017	10.0 - 90.0	1.0 - 6.0		7	16
	16		10.0 - 100.0	1.0 - 6.0	12	8	19
	20	-0.007 -0.020	15.0 - 100.0	1.0 - 6.0		10	23
	25		15.0 - 100.0	1.0 - 6.0		13	28

Ⓜ SKS3
53-58HRC
⚠ ชุบแข็งส่วนหัว สูงสุด 45HRC
Head part harden up to 45HRC

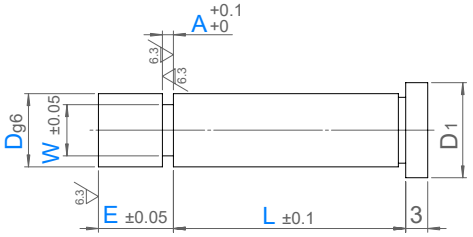

ORDER EXAMPLE Model D - L - A - E - W 25GLK10-45.5-4.1-5.5-5.5

Model: 25GLK

แบบเลือกค่า L / A / E / W ขึ้นทีละ 0.1มม.
Increment Type, choose L / A / E / W increment by 0.1mm

Model	D	g6	0.1mm increment				D1
			L	A	E	W	
25GLK	4	-0.004 -0.012	15.0 - 45.0	0.5 - 2.0	5.0 - 10.0	1.5 - 2.2	6
	6		15.0 - 72.0	0.5 - 3.0	5.0 - 10.0	2.5 - 4.6	8
	8	-0.005 -0.014	15.0 - 72.0	0.7 - 4.5	5.0 - 10.0	3.5 - 6.0	10
	10		15.0 - 82.0	0.7 - 4.5	5.0 - 15.0	5.0 - 8.0	13
	13	-0.006 -0.017	20.0 - 82.0	1.0 - 6.0	5.0 - 15.0	6.0 - 11.0	16
	16		20.0 - 82.0	1.0 - 6.0	10.0 - 20.0	6.0 - 14.0	19
	20	-0.007 -0.020	20.0 - 82.0	1.0 - 6.0	10.0 - 20.0	10.0 - 18.0	23
	25		20.0 - 82.0	1.0 - 6.0	10.0 - 20.0	13.0 - 22.0	28

Tel: +662-030-0092 Fax: +662-324-3190 / +662-324-3103
Website: www.sunrisegr.com Email: sale@sunrisegr.com

Detachable Guide Lifter - ไกด์ลิฟเตอร์ แบบถอดได้



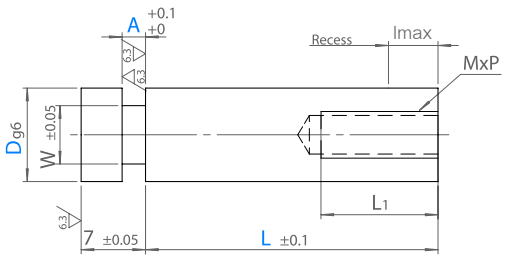

Model: 25GLR

OIL FREE™

D = 10 ~ 13



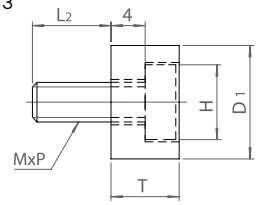

D = 6 ~ 8



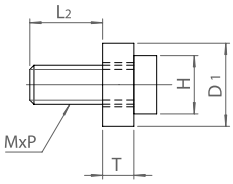

ORDER EXAMPLE: Model D - L - A → 25GLR10-26.5-1.5

Ⓜ SKS3 53-58HRC

Model	D g6		0.1mm increment L	0.1mm increment A	W	D1	T	MxP	H	L1	L2	lmax
25GLR	6	-0.004 -0.012	20.0 - 60.0	0.5 - 3.0	3.6	8	3	M3x0.5	5.5	15	9	6
	8	-0.005 -0.014	20.0 - 60.0	0.7 - 4.0	5	10	3	M4x0.7	7			
	10		26.0 - 70.0	0.7 - 4.0	6	13	8	M4x0.7	7	21	11	10
	13	-0.006 -0.017	26.0 - 80.0	1.0 - 6.0	7	16	9	M5x0.8	8.5			

Heavy Load Guide Lifter - ไกด์ลิฟเตอร์ สำหรับงานหนัก

OIL FREE™



Model: 25AGL

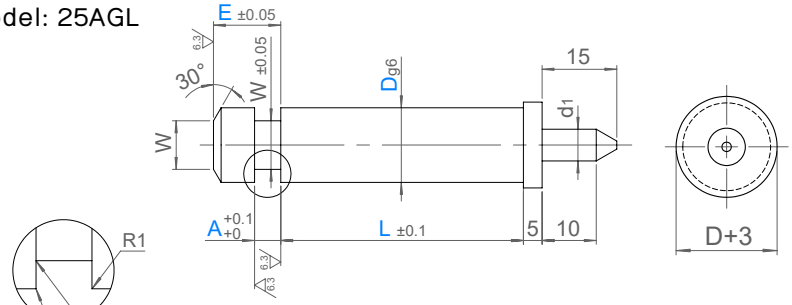

Ⓜ SKS3 53-58HRC

ชุบแข็งส่วนหัว สูงสุด 45HRC
Head part harden up to 45HRC

ORDER EXAMPLE: Model D - L - A - E → 25AGL16-35.5-3.5-15.5

Model	D g6		0.1mm increment L	0.1mm increment A	0.1mm increment E	W	d1
25AGL	13	-0.006 -0.017	30.0 - 80.0	3.0 - 10.0	7.0 - 18.0	8	6
	16		30.0 - 80.0	3.0 - 12.0	10.0 - 20.0	10	9.5
	20	-0.017 -0.020	30.0 - 90.0	3.0 - 15.0	10.0 - 23.0	13	9.5
	25		30.0 - 100.0	3.0 - 18.0	12.0 - 25.0	16	12

Guide Lifter with Spring Hole - ไกด์ลิฟเตอร์แบบมีรูสปริง

OF OIL FREE™



Model: 25GLSZ

SKS3
53-58HRC

ชุบแข็งส่วนหัว สูงสุด 45HRC
Head part harden up to 45HRC

ORDER EXAMPLE: Model D - L - A → 25GLSZ20-50-5.0

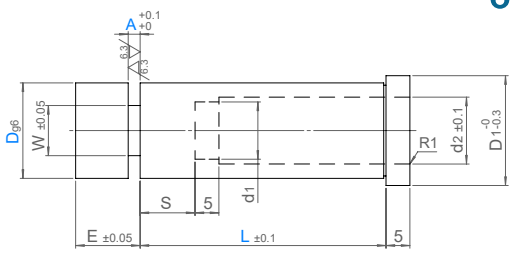

Model	D g6		L											A	E	W	d1	d2	S	D1
25GLSZ	13	-0.006 -0.017	30	35	40	45	50	55	60					2.0 2.5 3.6	7	7	6.5	8	10	16
	16		30	35	40	45	50	55	60					2.0 2.5 4.0		8	10.5	11	10	19
	20	-0.007 -0.020			40	45	50	55	60	65	70			3.6 4.0 5.0	12	10	13.5	14	12	23
	25				40	45	50	55	60	65	70	75	80	3.6 4.0 5.0		11	18.5	19	15	28
	32	-0.009 -0.025			40	45	50	55	60	65	70	75	80	5.0 6.0 7.0	17	13	25.5	26	18	35

Lifter Pin with Spring Hole - ลิฟเตอร์พินแบบมีรูสปริง

OF OIL FREE™



Model: 25LPAH

SKS3
53-58HRC

ชุบแข็งส่วนหัว สูงสุด 45HRC
Head part harden up to 45HRC

ORDER EXAMPLE: Model D - L → 25LPAH20-50

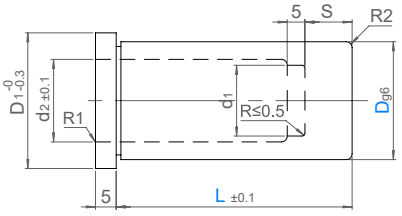

Model	D g6		L											d1	d2	S	D1
25LPAH	13	-0.006 -0.017	30	35	40	45	50	55	60					6	8	10	16
	16		30	35	40	45	50	55	60					10	11	10	19
	20	-0.007 -0.020			40	45	50	55	60	65	70			13	14	12	23
	25				40	45	50	55	60	65	70	75	80	18	19	15	28
	32	-0.009 -0.025			40	45	50	55	60	65	70	75	80	25	26	18	35

Lifter Pin with Spring & Pilot Hole - ลิฟเตอร์พินแบบมีรูสปริง และ ไพล็อทพั้นช์

OF OIL FREE™



Model: 25LHAH

SKS3
53-58HRC

ชุบแข็งส่วนหัว สูงสุด 45HRC
Head part harden up to 45HRC

ORDER EXAMPLE: Model D - L → 25LHAH20-50

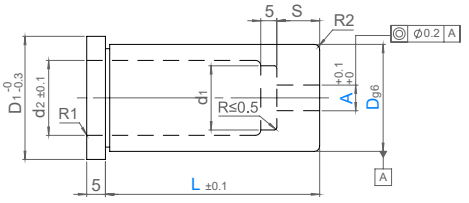

Model	D g6		L										d1	d2	S	D1
25LHAH	16	-0.006 -0.017	30	40	45	50	55	60					10	11	10	19
	20	-0.007 -0.020		40	45	50	55	60	65	70			13	14	12	23
	25			40	45	50	55	60	65	70	75	80	18	19	15	28
	32	-0.009 -0.025		40	45	50	55	60	65	70	75	80	25	26	18	35

SUN RISE technologies
Tel: +662-030-0092 Fax: +662-324-3190 / +662-324-3103
Website: www.sunrisegr.com Email: sale@sunrisegr.com

Block Guide Lifters - บล็อคไกด์ลิฟเตอร์

OIL FREE™



Model 25GLB

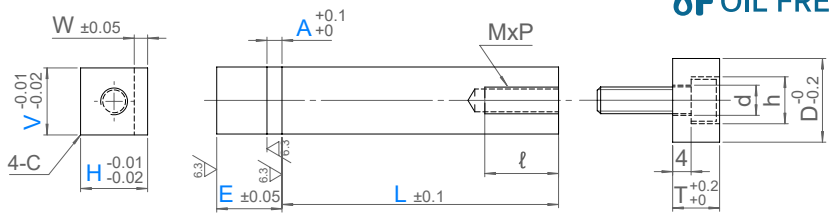

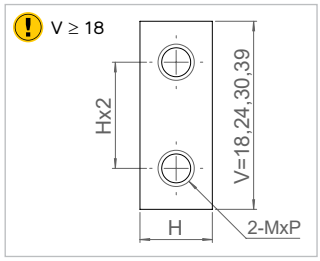

ORDER EXAMPLE — Model: V H - L - A - E — 25GLB0808-20.5-0.7-1.5

SKS3 53-58HRC

Model	V	H	0.1mm increment			W	C	MxP	ℓ	D	d	T	h
			L	A	E								
25GLB	05	05	20.0 - 60.0	0.5 - 3.6	5.0 - 15.0	1.5	0.5	M3 x 0.5	9	10	4	7	6.5
	06	06											
	18												
	08	08						M4 x 0.7	12	14	5	8	8
	24												
	10	10				2.0	0.8						
	30												
	13	13	26.0 - 80.0			2.5		M5 x 0.8	15	18	6	9	9.5
	39												

Block Guide Lifters Fixed Type - บล็อคไกด์ลิฟเตอร์ แบบร่องตายตัว

OIL FREE™



Model 25GLBK

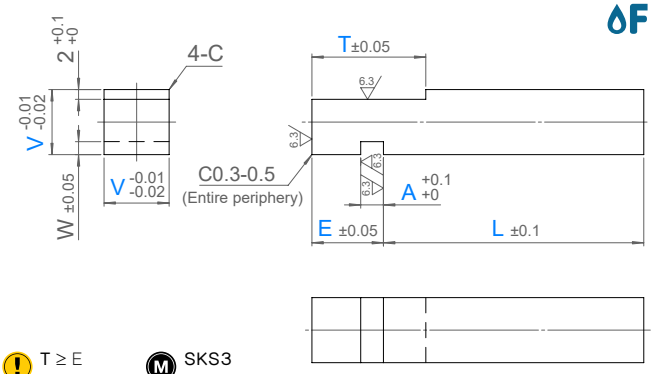

ORDER EXAMPLE — Model: V - L - A - E - T — 25GLBK10-35-1.5-5.5-30.5

T ≥ E
T ≤ (L+E)/2

SKS3 53-58HRC

Model	V	5mm increment	0.1mm increment			W	C
		L	A	E	T		
25GLBK	6	30 - 80	0.5 - 4.0	5.0 - 25.0	5.0 - 50.0	1.5	0.5
	8						
	10					2.0	0.8
	13					2.5	

ระบบเคลื่อนย้ายแม่พิมพ์

Guide Lifters with Air Hole - ไกด์ลิฟเตอร์ แบบมีช่องอากาศ



Model: 25GLJS

OIL FREE™

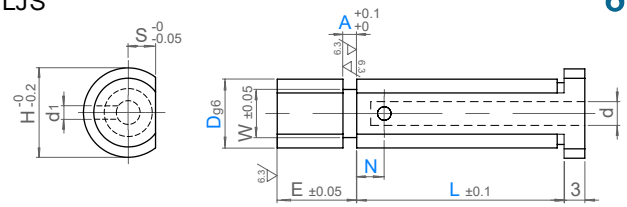

ORDER EXAMPLE: Model D - L - N - A

25GLJS8-30-3-1.6

SKS3 53-58HRC

ชุบแข็งส่วนหัว สูงสุด 45HRC
Head part harden up to 45HRC

D g6		L															N 1mm increment	A	W	H	E	d	d1	S
4	-0.004 -0.012	10	15	20	22	25	28	30	33	35	36	40	45	50			2 ≤ N ≤ D-2	0.5 / 0.8 / 1.0	2.0	6	5	2.0	1.5	1.75
6		10	15	20	22	25	28	30	33	35	36	40	45	50				0.5 / 0.8 / 1.0 / 1.6	3.6	8	12	2.5		2
8	-0.005 -0.014		15	20	22	25	28	30	33	35	36	40	45	50	55			1.0 / 1.6 / 2.0	5.0	10		3.5	2.0	3
10				20	22	25	28	30	33	35	36	40	45	50	55			1.6 / 2.0 / 2.5	6.0	13				4
13	-0.006 -0.017			20	22	25	28	30	33	35	36	40	45	50	55			2.0 / 2.5 / 3.6	7.0	16		4.5	2.5	5
16								30	33	35	36	40	45	50	55	60	70	2.0 / 2.5 / 4.0	8.0	19	12			6

Lifter Pins with Air Hole - ลิฟเตอร์พิน แบบมีช่องอากาศ



Model: 25LJS

OIL FREE™

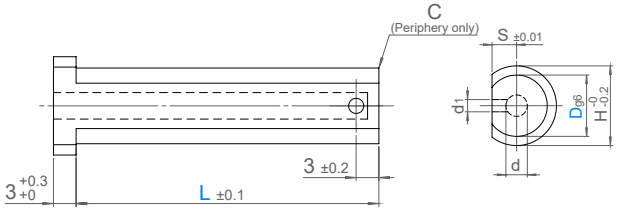

ORDER EXAMPLE: Model D - L

25LJS8-30

SKS3 53-58HRC

Model	D g6		L	H	d	d1	S	C
25LJS	4	-0.004 -0.012	25 28 30 34 40	6	2.0	1.5	1.75	0.3
	6			8	2.5		2	
	8	-0.005 -0.014		10	3.5	2.0	3	0.5
	10			13			4	

Block Lifter - บล็อคลิฟเตอร์



Model: 25BLR

OIL FREE™

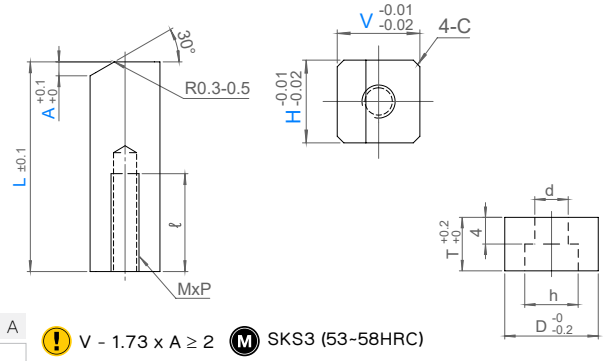

ORDER EXAMPLE: Model V H - L - A

25BLR0808-40.5-1.5

V - 1.73 x A ≥ 2

SKS3 (53-58HRC)

Model	V	H	L 0.1mm increment	A 0.1mm increment	C	MxP	ℓ	D	d	T	h	Bolt
25BLR	06	06	20.0 - 60.0	0.5 - 3.6	0.5	M3 x 0.5	9	10	4	7	6.5	24CB3x10
	08	08				M4 x 0.7	12	14	5	8	8.0	24CB4x12
	10	10			0.8							
	13	13				M5 x 0.8	15	18	6	9	9.5	24CB5x15

SUN RISE technologies
Tel: +662-030-0092 Fax: +662-324-3190 / +662-324-3103
Website: www.sunrisegr.com Email: sale@sunrisegr.com

Lifter Pins - ลิฟเตอร์พิน

OIL FREE™



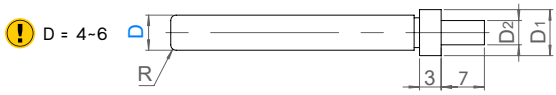

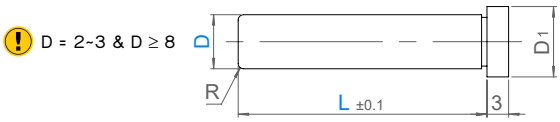

M SKS3
53~58HRC

ชุบแข็งส่วนหัว สูงสุด 45HRC
Head part harden up to 45HRC

ORDER EXAMPLE | Model | D - L | 25LP10-50

Model: 25LP

แบบมาตรฐาน เลือกเฉพาะค่า L
Standard Type, choose only L

Model	D		L															D1	D2	R
25LP	2	0 -0.05	10	15														3	-	0.3
	3		10	15	20	22	25	28	30	33	35	36	40					4		
	4		10	15	20	22	25	28	30	33	35	36	40	45	50			6	3	
	6		10	15	20	22	25	28	30	33	35	36	40	45	50	55	60	8	4.6	
	8		10	15	20	22	25	28	30	33	35	36	40	45	50	55	60	10		0.5
	10				20	22	25	28	30	33	35	36	40	45	50	55	60	13		
	13				20	22	25	28	30	33	35	36	40	45	50	55	60	16	-	2.0
	16								30	33	35	36	40	45	50	55	60	70	19	
	20								30	33	35	36	40	45	50	55	60	70	23	

ORDER EXAMPLE | Model | D - L | 25LPH10-55.5

Model: 25LPH

แบบเลือกค่า L ขึ้นทีละ 0.1มม.
Increment Type, choose L increment by 0.1mm

Model	D g6		L 0.1mm increment	D1	D2	R
25LPH	2	-0.002 -0.008	10.0 - 40.0	3	-	0.3
	3		10.0 - 50.0	4		
	4	-0.004 -0.012	10.0 - 50.0	6	3	
	6		10.0 - 60.0	8	4.6	
	8	-0.005 -0.014	10.0 - 80.0	10	-	0.5
	10		10.0 - 80.0	13		
	13	-0.006 -0.017	20.0 - 90.0	16		2.0
	16		20.0 - 100.0	19		
	20	-0.007 -0.020	25.0 - 100.0	23		
	25		30.0 - 100.0	28		

Resin (POM) Lifter Pins - ลิฟเตอร์พิน แบบเรซิน (POM)

OIL FREE™



Model: 25JLP

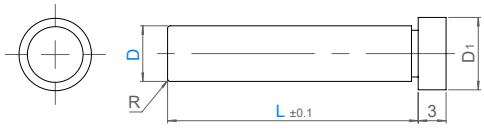

ORDER EXAMPLE | Model | D - L | 25JLP10-10.5

M POM

Model	D		L 0.1mm increment	D1	R
25JLP	2	0 -0.05	10.0 - 30.0	3	0.3
	3		10.0 - 30.0	4	
	4		10.0 - 40.0	6	
	6		10.0 - 50.0	8	
	8		10.0 - 60.0	10	0.5
	10		10.0 - 60.0	13	

ระบบเคลื่อนย้ายแม่พิมพ์

Lifter Pins with Pilot Punch Relief Hole - ลิฟเตอร์พิน แบบมีช่องไพล็อตพั้นช์

OIL FREE™

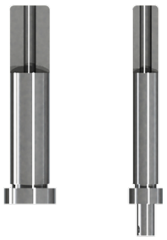

Model: 25LHH

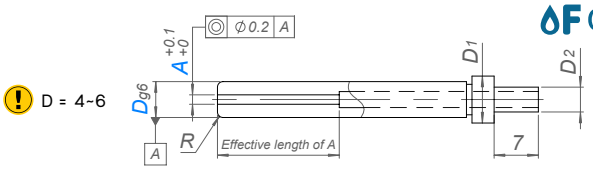

D = 4-6

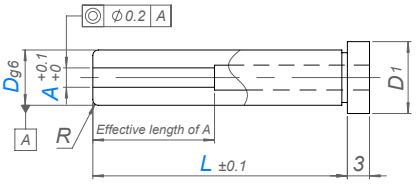

D = 3-5 & D ≥ 10

SKS3
53-58HRC

ชุบแข็งส่วนหัว สูงสุด 45HRC
Head part harden up to 45HRC

ORDER EXAMPLE: Model D - L - A → 25LHH10-20.5-1.7

Model	D g6		L 0.1mm increment	A	D1	D2	min. effective length of A	R
25LHH	3	-0.002 -0.008	20.0 - 30.0	0.8 - 1.4 (0.1mm increment)	4	-	2	0.3
	4	-0.004 -0.012	20.0 - 50.0	1.0 - 2.3 (0.1mm increment)	6	3	2	
	5		20.0 - 50.0	1.4 - 3.0 (0.1mm increment)	6.4	-	3	
	6		20.0 - 50.0	1.4 - 3.5 (0.1mm increment)	8	4.6		
	8	-0.005 -0.014	20.0 - 50.0	1.4 - 5.3 (0.3mm increment)	10	-	4	0.5
	10		20.0 - 60.0	1.4 - 5.3 (0.3mm increment)	13		5	
				5.5 / 5.8 / 6.0 / 6.3 / 6.8				
	13	-0.006 -0.017	20.0 - 60.0	1.8 - 9.3 (0.5mm increment)	16		6	
	16		20.0 - 60.0	2.0 - 11.5 (0.5mm increment)	19		8	
	20	-0.007 -0.020	20.0 - 60.0	2.0 - 15.5 (0.5mm increment)	23		10	

Lifter Pins with Pilot Punch Relief Hole - ลิฟเตอร์พิน แบบมีช่องไพล็อตพั้นช์

OIL FREE™



Model: 25LHHV

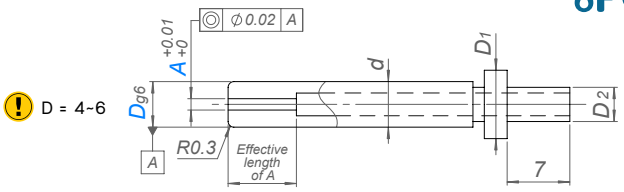

D = 4-6

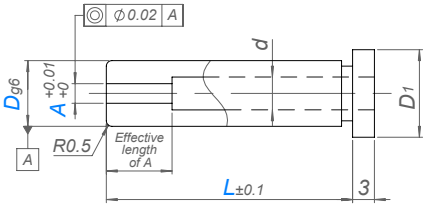

D = 8

SKS3
53-58HRC

ชุบแข็งส่วนหัว สูงสุด 45HRC
Head part harden up to 45HRC

ORDER EXAMPLE: Model D - L - A → 25LHHV8-35-2.45

Model	D g6		L							A 0.01mm increment	D1	D2	min. effective length of A	d
25LHHV	4	-0.004 -0.012	20	22	25	30				1.00 - 1.60	6	3	2	2.2
	6				25	30	33	35		1.00 - 3.00	8	4.6	3	3.4
	8	-0.005 -0.014				30	33	35	40	1.00 - 4.00	10	-	4	4.4

SUN RISE technologies
Tel: +662-030-0092 Fax: +662-324-3190 / +662-324-3103
Website: www.sunrisegr.com Email: sale@sunrisegr.com

Block Lifters - บล็อคลิฟเตอร์

OIL FREE™

Model: 25BLL-L

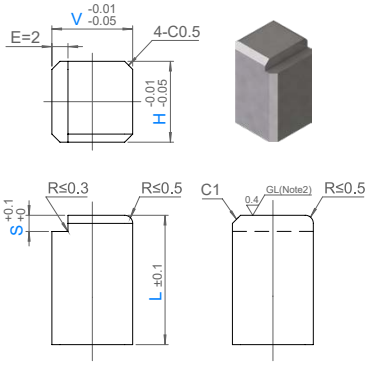

Model: 25BLH-L

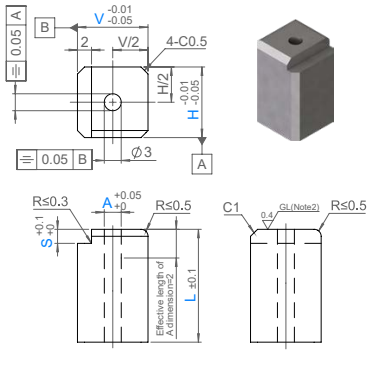

Model: 25BLLF-L

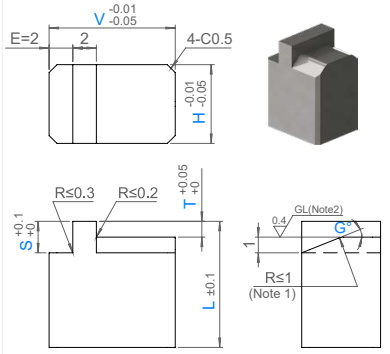

Model: 25BLL-R

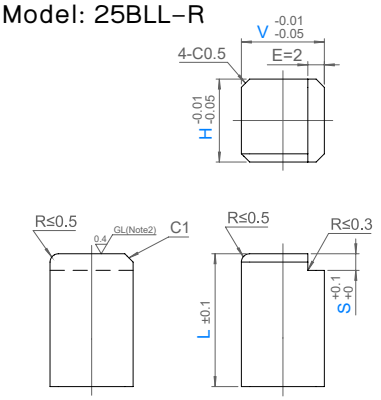

Model: 25BLH-R

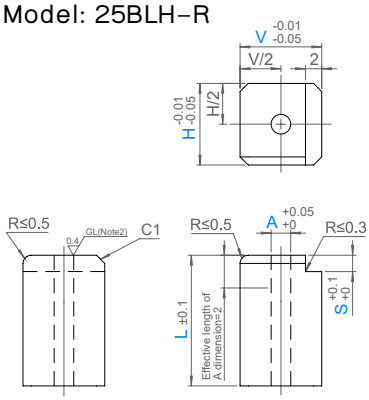

Model: 25BLLF-R

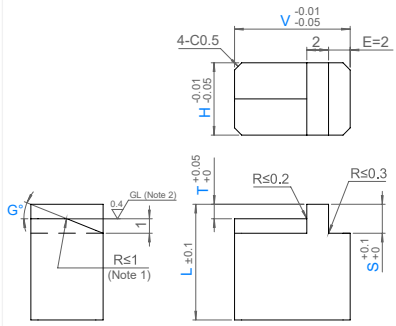

Model: 25BLL-W

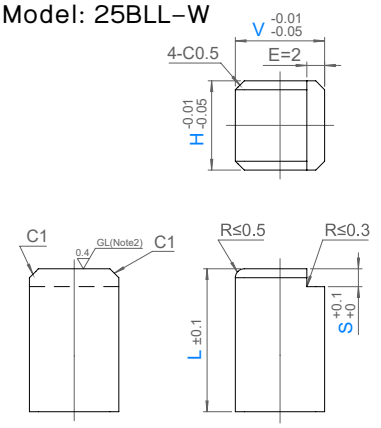

Model: 25BLH-W

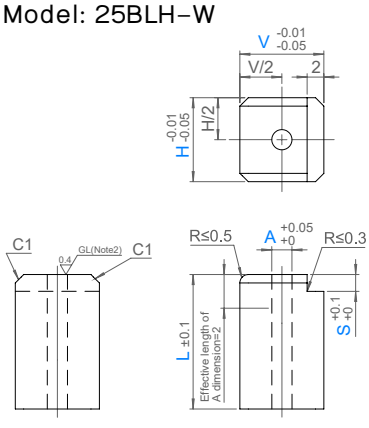

Model: 25BLLF-W

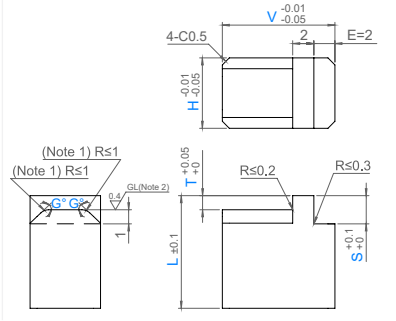

ORDER EXAMPLE Model V - H - L - S - A - T - G

25BLL-L8-6-10-2-0.5-30

Ⓜ SKD11 60-63HRC

Model	V	H	L	S	T 0.1mm increment	G
25BLL-L 25BLL-R 25BLL-W 25BLLF-L 25BLLF-R 25BLLF-W	5	5	10	1 2	-	-
	6	6				
	8	6	10 13 20 25	1 2 3	0.1 - 2.5	30 45
		8				
	10	6			0.1 - 3.0	
		8				
		10				
	13	6			0.1 - 3.5	
		8				
		10				

Model	V	H	L	S	A 0.1mm increment
25BLH-L 25BLH-R 25BLH-W	6	6	8 10	1 2	0.8 - 1.8
	8	8			1.0 - 3.5
	10	10			1.0 - 5.0

Knockout Pin - น็อคเอ้าท์พิน

OIL FREE™



Model: 25KOP

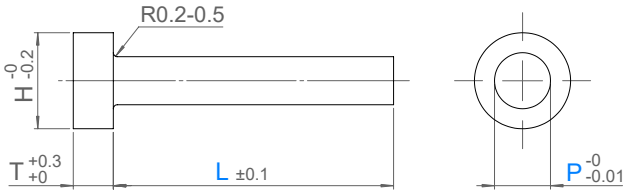

ORDER EXAMPLE: Model | No. - L - P → 25KOP10-50.5-5.05

M SKS3 53-58HRC

Model	No.	L 0.1mm increment	P 0.01mm increment	T	H
25KOP	4	7.0 - 60.0	1.00 - 4.00	3	6
	6		1.00 - 6.00		8
	8		2.00 - 8.00	5	10
	10		3.00 - 10.00		12
	12		4.00 - 12.00		14
	13		6.00 - 13.00		16

Push Pins - พุชพิน

OIL FREE™



Model: 25JPWH

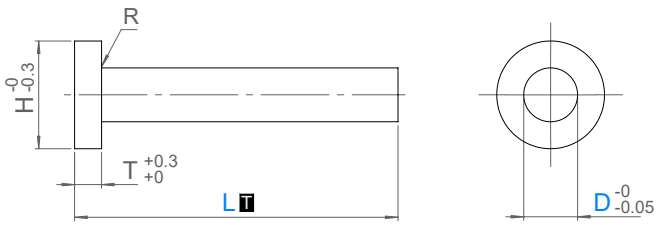

ORDER EXAMPLE: Model | D - L → 25JPWH5-10.1

M SKD61 50HRC~

Model	D	L 0.1mm increment		R	T	H
25JPWH	2	10.0 - 100.0	±0.1	0.5 ≤ R ≤ 1.0	5	5
	3					8
	4					10
	5					12
	6					14
	8					16
	10					18

SUN RISE technologies
Tel: +662-030-0092 Fax: +662-324-3190 / +662-324-3103
Website: www.sunrisegr.com Email: sale@sunrisegr.com

Material Guide Units - ชุดประกอบไกด์

A Type Model: 25ZGUA

OF OIL FREE™

แบบติดตั้งกับไดเซ็ต
Fixed to Die Set



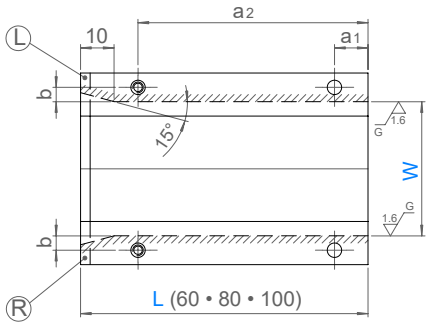

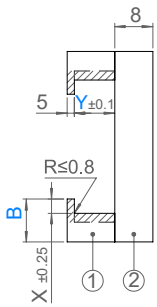

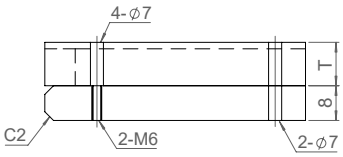

Model		L	a1	a2
25ZGUA	Unit	60	10	45
25ZGUA-R	Rail Ⓡ	80		65
25ZGUA-L	Rail Ⓛ	100		75

B Type Model: 25ZGUB

แบบติดตั้งกับดายเพลท
Fixed to Die Plate



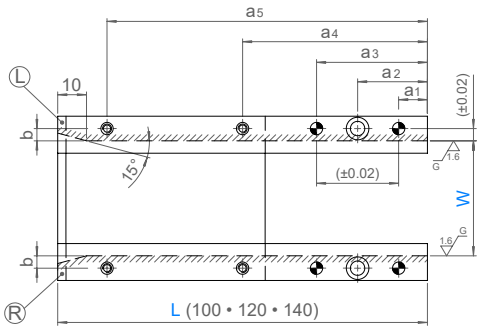

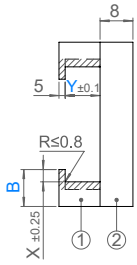

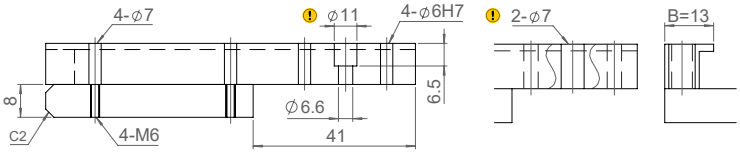

Model		L	a1	a2	a3	a4	a5
25ZGUB	Unit	100	8	20	32	50	85
25ZGUB-R	Rail Ⓡ	120					105
25ZGUB-L	Rail Ⓛ	140					115

ORDER EXAMPLE: Model D - L - Y - W — 25ZGUA16-80-10-100.5

Ⓜ S50C (55HRC-) Induction Harden

⚠ if B=13 or Y ≤ 4, Ø7 through hole

Model	D	L	Y 1mm increment	W 0.1mm increment	b	X
25ZGUA	13	60 80 100	1 - 30	10.0 - 160.0	5	3
	16				7	3
	20				8	5
25ZGUB	13	100 120 140	1 - 30	10.0 - 160.0	5	3
	16				7	3
	20				8	5

Model	D	L	Y 1mm increment	b	X
25ZGUA-R 25ZGUA-L	13	60 80 100	1 - 30	5	3
	16			7	3
	20			8	5
25ZGUB-R 25ZGUB-L	13	100 120 140	1 - 30	5	3
	16			7	3
	20			8	5

Material Guide Units - ชุดประกอบไกด์

OF OIL FREE™

A Type
Model: 25SUK-A

แบบติดตั้งกับไดเซ็ต
Fixed to Die Set

! L = 60 / 80 / 100

! L = 125 / 160

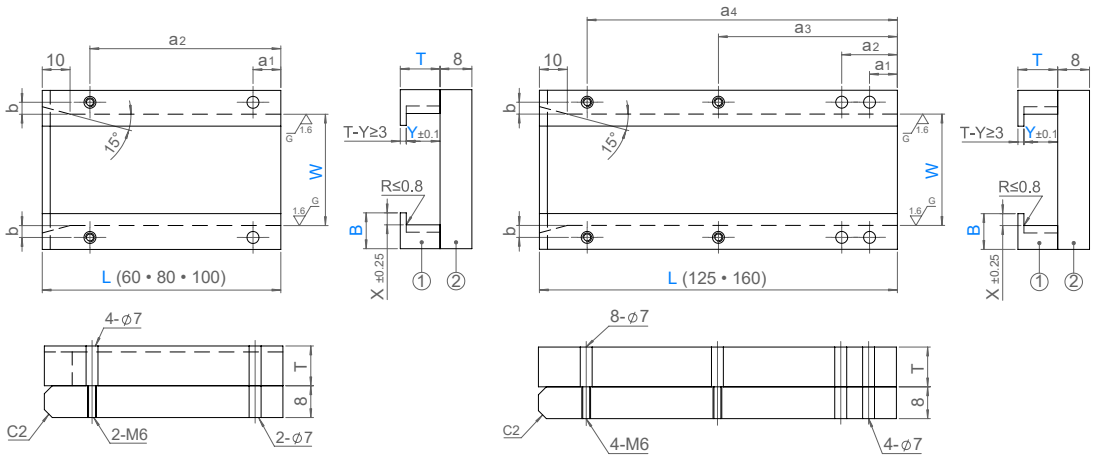

① Ⓜ SKS3 ② Ⓜ S50C

B Type
Model: 25SUK-B

แบบติดตั้งกับดายเพลท
Fixed to Die Plate

! L = 100 / 120 / 140

! L = 180 / 215

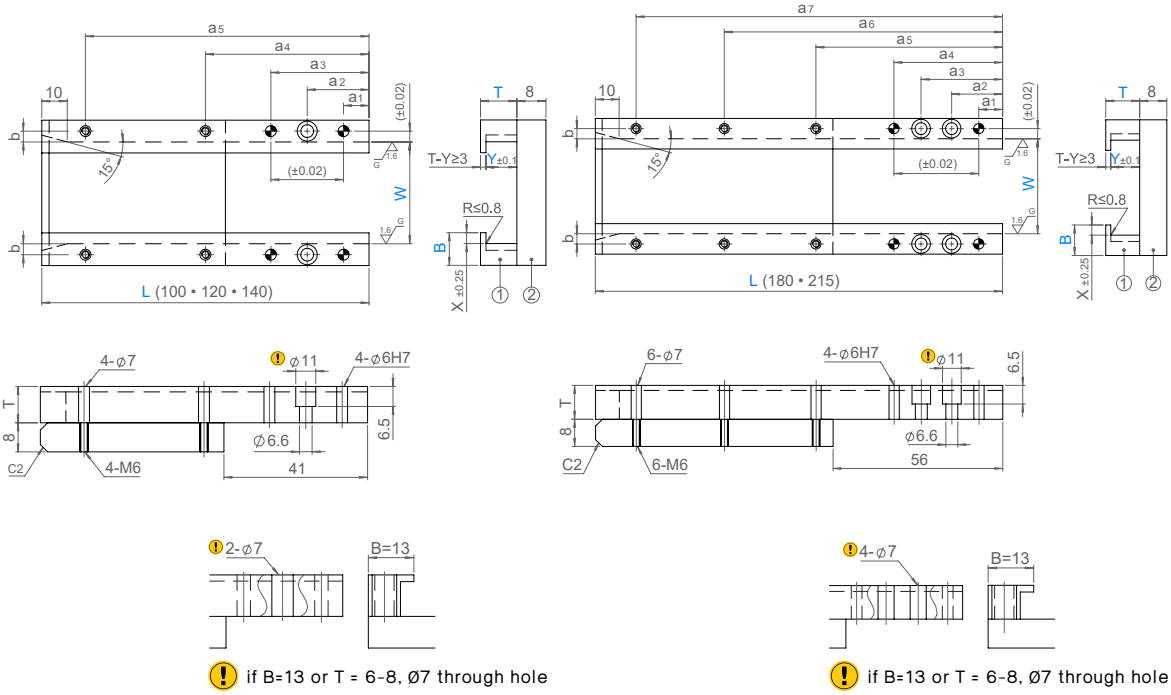

! if B=13 or T = 6-8, Ø7 through hole

! if B=13 or T = 6-8, Ø7 through hole

① Ⓜ SKS3 ② Ⓜ S50C

SUN RISE technologies
Tel: +662-030-0092 Fax: +662-324-3190 / +662-324-3103
Website: www.sunrisegr.com Email: sale@sunrisegr.com

ORDER EXAMPLE Model B - T - L - Y - W
25SUK-A13-8-100-5.0-120.5

Model	B	T					L	Y 0.1mm. increment	W 0.1mm. increment	a1	a2	a3	a4	a5	a6	a7	b	X
25SUK-A	13	6	8	10			60	1.0 - T-3.0	7.0 - 160.0	10	45	-	-	-	-	-	5	3
							80				65							
							100				75							
							125				25	60	100					
	16	6	8	10	13		60			10	45	-	-				7	3
							80				65							
							100				75							
							125				25	60	100					
	20		8	10	13	16	60			10	45	-	-				8	5
							80				65							
							100				75							
							125				25	60	100					
							160				25	60	135					
	25		8	10	13	16	60			10	45	-	-				10	5
							80				65							
							100				75							
							125				25	60	100					
							160				25	60	135					
25SUK-B	13	6	8	10			100	1.0 - T-3.0	7.0 - 160.0	8	20	32	50	85	-	-	5	3
							120							105				
							140							115				
							180					35	47	75	115	115		
	16	6	8	10	13		100			8	20	32	50	85	-	-	7	3
							120							105				
							140							115				
							180					35	47	75	115	115		
	20		8	10	13	16	100			8	20	32	50	85	-	-	8	5
							120							105				
							140							115				
							180					35	47	75	115	115		
							215							75	130	190		
	25		8	10	13	16	100			8	20	32	50	85	-	-	10	5
							120							105				
							140							115				
							180					35	47	75	115	115		
							215							75	130	190		

Stock Guide Plate - แผ่นสต๊อคไกด์

OIL FREE™



Model: 25SBM

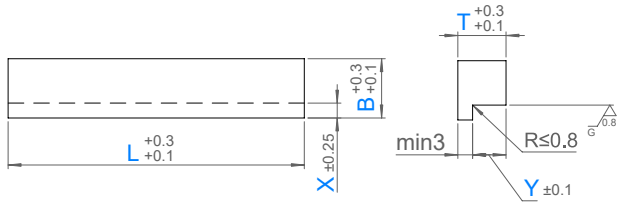

Model: 25SBA

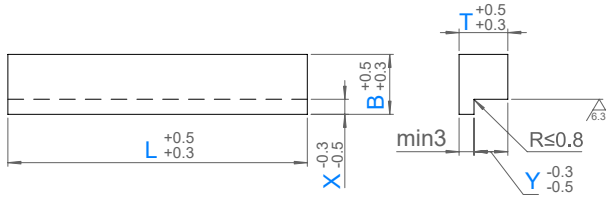

ORDER EXAMPLE Model B - T - L - X - Y

25SBM13-6-150-3.2-2.8

M SKS3 37-41HRC

Model	B	T	L 1mm increment	X 0.1mm increment	Y 0.1mm increment
25SBM 25SBA	13	6 , 8 , 10	10 - 200	1.0 - 5.0	1.0 - T-3.0
	16	6 , 8 , 10 , 13	10 - 200		
	20	8 , 10 , 13 , 16	10 - 200		
	25	8 , 10 , 13 , 16	10 - 200		

Spacer for Stock Guide - สเปเซอร์สำหรับสต๊อคไกด์

OIL FREE™

Model: 25SSG

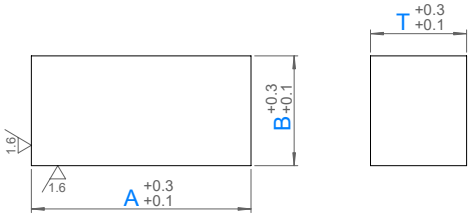

ORDER EXAMPLE Model - A - B - T

25SSG-100-40-55

M SS400

Model	A	B	T 1mm increment
25SSG	60	25 40 55	5 - 60
	80		
	100		
	125		
	160		
	200		

SUN RISE technologies
Tel: +662-030-0092 Fax: +662-324-3190 / +662-324-3103
Website: www.sunrisegr.com Email: sale@sunrisegr.com

Lifter Units - ลิฟเตอร์ยูนิต

OIL FREE™



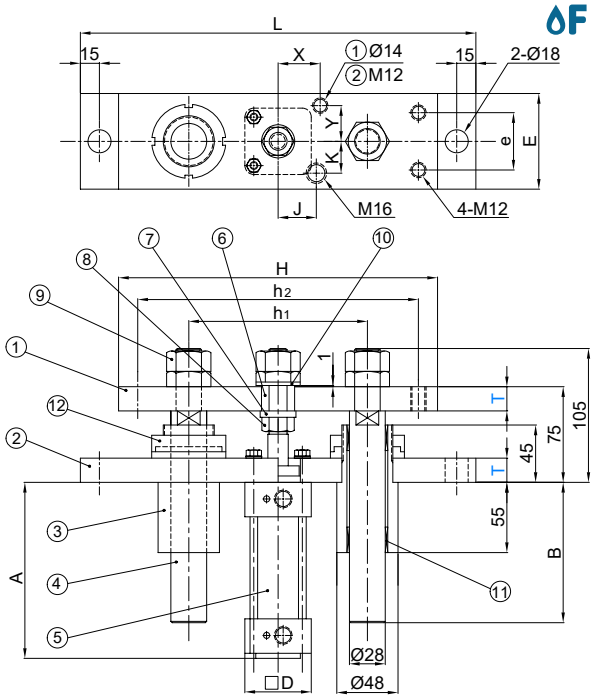

Model:
25LTHS
25CLTHS

No.	Description	qty	Material and Remark
1	Lifter Plate	1	SS400
2	Base Plate	1	SS400
3	Guide Holder	2	STKM13A
4	Guide Pin	2	S45C (55-60HRC)
5	Air Cylinder	1	SMC
6	Collar	1	STKM13A
7	Spacer	1	SS400
8	Hex Nuts	1	SS400 M20XP2.5
9	Hard Lock Nut	3	SS400 M20XP2.5
10	Flat Washers	1	SS400 for M20
11	Oil Free Bush	4	PTFE Type Bushing
12	Hard Lock Nut	2	M40XP1.5

⑤Air Cylinder	SMC
Cylinder Tube Inner Diameter	Ø40, Ø63
Model	MB
Operation Method	Double Acting Side Load
Gauranteed Pressure Resistance	1.5MPa (15.3kgf/cm²)
Maximum Use Pressure	1.0MPa (10.2kgf/cm²)
Minimum Use Presssure	0.05MPa (0.5kgf/cm²)
Ambient Temp and Air Temp During Use	-5-60°C
Piston Speed	50-1000MM/S
Stroke Length Tolerance	+1.0 +0
Cushion	Both Side (Air Cushion)
Connection Opening Diameter	Ø40: Rc (PT) 1/4, Ø63: Rc (PT) 3/8
Installation Instruction	Basic Form

ORDER EXAMPLE

Model	D	-	S	-	T
25LTHS40-50-16					

Model	Cylinder Inner D	Stroke S	T	H	h1	h2	L	E	e	D	J	K	X	Y	A	B
25LTHS (Standard)	40	50	16	250	160	220	310	75	45	52	30	25	33	28	138	110
		75	19												163	135
		100													188	160
	63	50	16	270	160	240	330	90	70	75	35	30	48	32	148	110
		75	19												173	135
		100													198	160
25CLTHS (Compact)	40	50	16	215	115	185	270	75	45	52	30	25	33	28	138	110
		75	19												163	135
		100													188	160
	63	50	16	240	135	210	295	90	70	75	35	30	48	32	148	110
		75	19												173	135
		100													198	160

H-Type Lifter Unit - ลิฟเตอร์ยูนิต (H-Type)

OIL FREE™

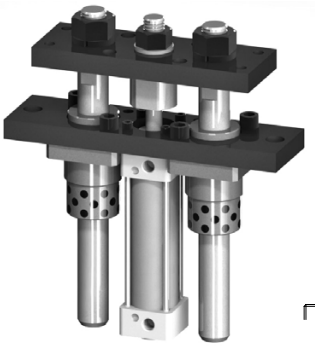

Model: 25SHGC

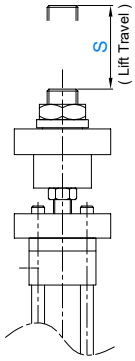

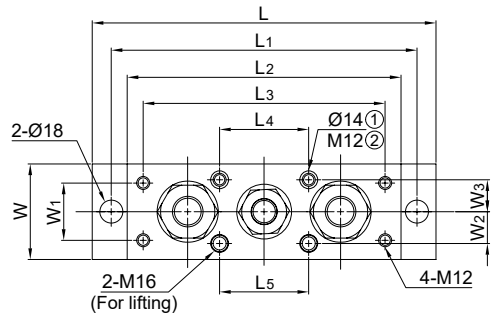

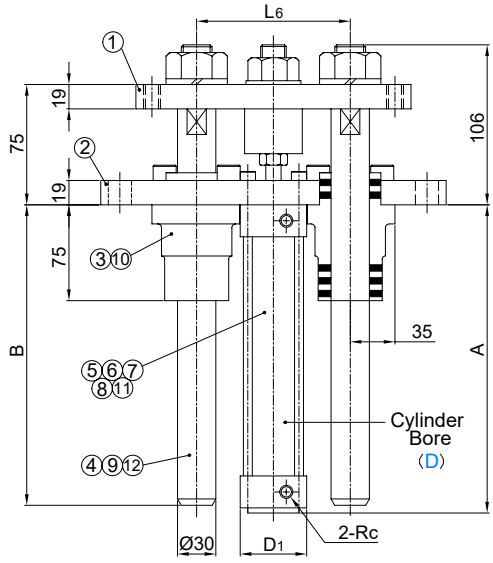

ORDER EXAMPLE Model D - S — 25SHGC40-50

Cylinder Bore D	Stroke S	A	B	Rc	D1	L	L1	L2	L3	L4	L5	L6	W	W1	W2	W3
40	50	138	130	1/4	52	270	240	215	190	66	60	120	75	45	25	28
	75	163	155													
	100	188	180													
	125	213	205													
	150	238	230													
	175	263	255													
	200	288	280													
	225	313	305													
	250	338	330													
	275	363	355													
	300	388	380													
63	50	148	110	3/8	75	290	260	235	215	96	70	145	90	70	30	32
	75	173	135													
	100	198	160													
	125	223	205													
	150	248	230													
	175	273	255													
	200	298	280													
	225	323	305													
	250	348	330													
	275	373	355													
	300	398	380													

No.	Description	qty	Material and Remark
1	Lifter Plate	1	SS400
2	Cylinder Holder plate	1	SS400
3	Guide Holder	2	FC250 with Graphite
4	Guide Pin	2	S45C HRC50 - 60
5	Air Cylinder	1	SMC MB40 or MB63
6	Joint	1	SS400
7	Hex Socket Bolt	4	M6 or M8
8	U Nut	1	M20
9	U Nut	2	M24
10	Hex Socket Bolt	4	M12 x 35
11	Flat Washer	1	for M20
12	Spring Washer	2	for M24

Tel: +662-030-0092 Fax: +662-324-3190 / +662-324-3103
Website: www.sunrisegr.com Email: sale@sunrisegr.com

H-Type Lifter Unit - ลิฟเตอร์ยูนิต (H-Type)

OF OIL FREE™



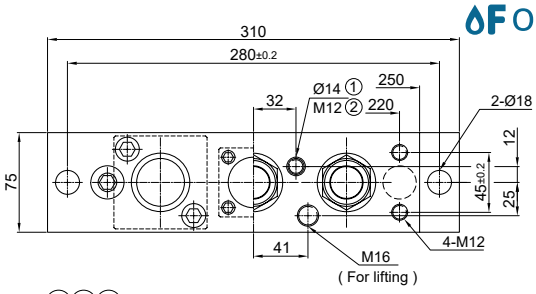

Model: 25SHGT40

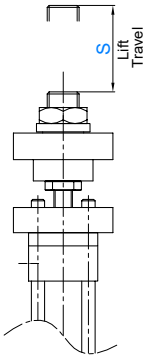

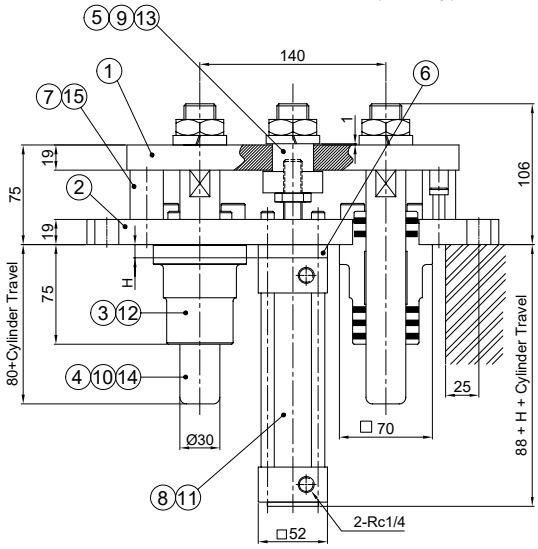

ORDER EXAMPLE Model D - S
25SHGT40-50

Model	Cylinder Bore D	Stroke S	H	Cylinder Travel
25SHGT	40	10	40	50
		20	30	
		30	20	
		40	10	
		50	0	
		60	40	100
		70	30	
		80	20	
		90	10	
		100	0	
		110	40	150
		120	30	
		130	20	
		140	10	
		150	0	
		160	40	200
		170	30	
		180	20	
		190	10	
		200	0	
		210	40	250
		220	30	
		230	20	
		240	10	
		250	0	

No.	Description	qty	Material and Remark
1	Lifter Plate	1	SS400
2	Cylinder Holder Plate	1	SS400
3	Guide Holder	2	FC250 with Graphite
4	Guide Pin	2	S45C HRC50 - 60
5	Joint	1	SS400
6	Block	1	SS400
7	Stopper	2	Urethane
8	Air Cylinder	1	SMC MB40
9	U Nut	1	M20
10	U Nut	2	M24
11	Hex Socket Head Bolt	4	M6
12	Hex Socket Head Bolt	4	M12 x 35
13	Flat Washer	1	for M20
14	Spring Washer	2	for M24
15	Shoulder Bolt	2	M8 x 20

ชิ้นส่วนประกอบ | Accessory Parts

6) Block

Model	D	H
25HLSPC	40	10
		20
		30
		40

ORDER EXAMPLE Model D - H
25HLSPC40-30

H-Type Lifter Unit - ลิฟเตอร์ยูนิต (H-Type)

OF OIL FREE™



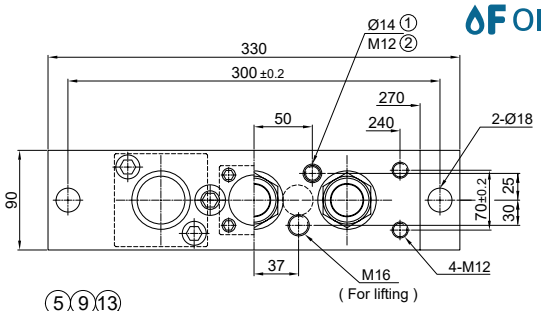

Model: 25SHGT63

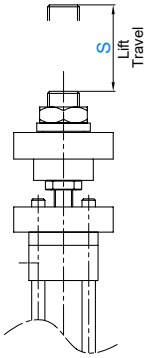

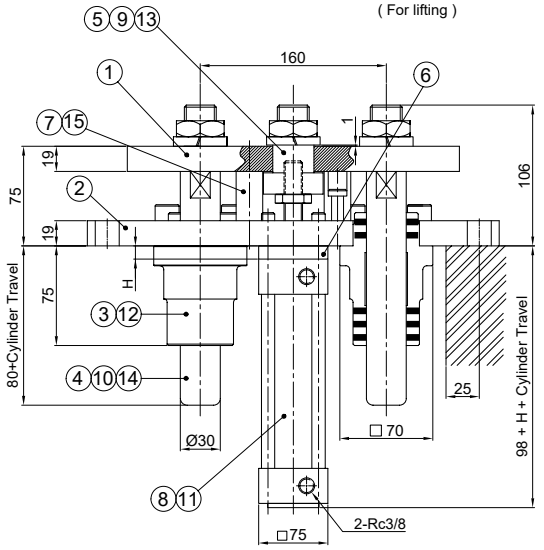

ORDER EXAMPLE Model D - S
25SHGT63-50

Model	Cylinder Bore D	Stroke S	H	Cylinder Travel
25SHGT	63	10	40	50
		20	30	
		30	20	
		40	10	
		50	0	
		60	40	100
		70	30	
		80	20	
		90	10	
		100	0	
		110	40	150
		120	30	
		130	20	
		140	10	
		150	0	
		160	40	200
		170	30	
		180	20	
		190	10	
		200	0	
		210	40	250
		220	30	
		230	20	
		240	10	
		250	0	

No.	Description	qty	Material and Remark
1	Lifter Plate	1	SS400
2	Cylinder Holder Plate	1	SS400
3	Guide Holder	2	FC250 with Graphite
4	Guide Pin	2	S45C HRC50 - 60
5	Joint	1	S45C
6	Block	1	SS400
7	Stopper	2	Urethane
8	Air Cylinder	1	SMC MB63
9	U Nut	1	M20
10	U Nut	2	M24
11	Hex Socket Head Bolt	4	M6
12	Hex Socket Head Bolt	4	M12 x 35
13	Flat Washer	1	for M20
14	Spring Washer	2	for M24
15	Shoulder Bolt	2	M8 x 20

ชิ้นส่วนประกอบ | Accessory Parts

6) Block

Model	D	H
25HLSPC	63	10
		20
		30
		40

ORDER EXAMPLE Model D - H
25HLSPC63-30

SUN RISE technologies
Tel: +662-030-0092 Fax: +662-324-3190 / +662-324-3103
Website: www.sunrisegr.com Email: sale@sunrisegr.com

H-Type Lifter Unit - ลิฟเตอร์ยูนิต (H-Type)

OF OIL FREE™



Model: 25SHGT80

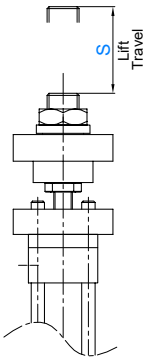

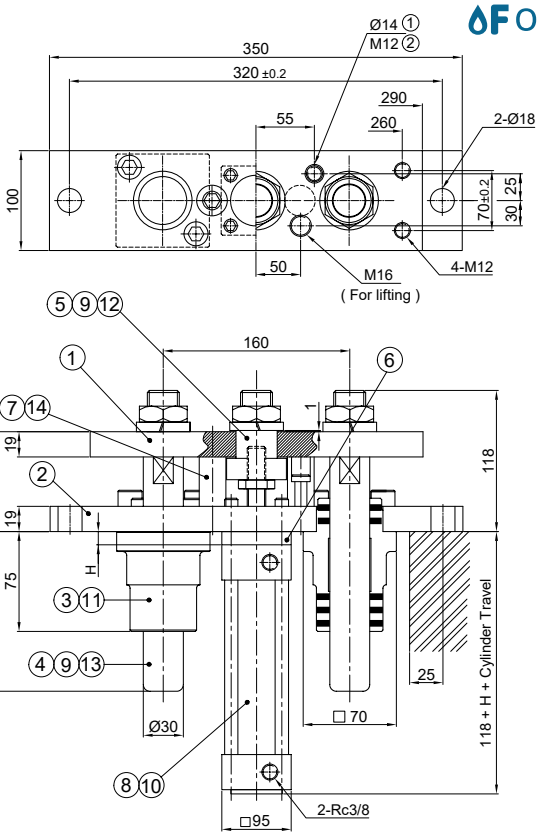

ORDER EXAMPLE Model D - S
25SHGT80-50

Model	Cylinder Bore D	Stroke S	H	Cylinder Travel
25SHGT	80	10	40	50
		20	30	
		30	20	
		40	10	
		50	0	
		60	40	100
		70	30	
		80	20	
		90	10	
		100	0	
		110	40	150
		120	30	
		130	20	
		140	10	
		150	0	
		160	40	200
		170	30	
		180	20	
		190	10	
		200	0	
		210	40	250
		220	30	
		230	20	
		240	10	
		250	0	

No.	Description	qty	Material and Remark
1	Lifter Plate	1	SS400
2	Cylinder Holder	1	SS400
3	Guide Holder	2	FC250 with Graphite
4	Guide Pin	2	S45C HRC50 - 60
5	Joint	1	S45C
6	Block	1	SS400
7	Stopper	2	Urethane
8	Air Cylinder	1	SMC MB80
9	U Nut	3	M24
10	Hex Socket Bolt	4	M6
11	Hex Socket Bolt	4	M12 x 35
12	Flat Washer	1	for M20
13	Spring Washer	2	for M24
14	Shoulder Bolt	2	M8 x 20

ชิ้นส่วนประกอบ | Accessory Parts

6) Block

Model	D	H
25HLSPC	80	10
		20
		30
		40

ORDER EXAMPLE Model D - H
25HLSPC80-30

H-Type Lifter Unit - ลิฟเตอร์ยูนิต (H-Type)

OIL FREE™



Model: 25SHGF

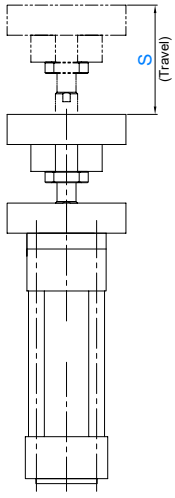

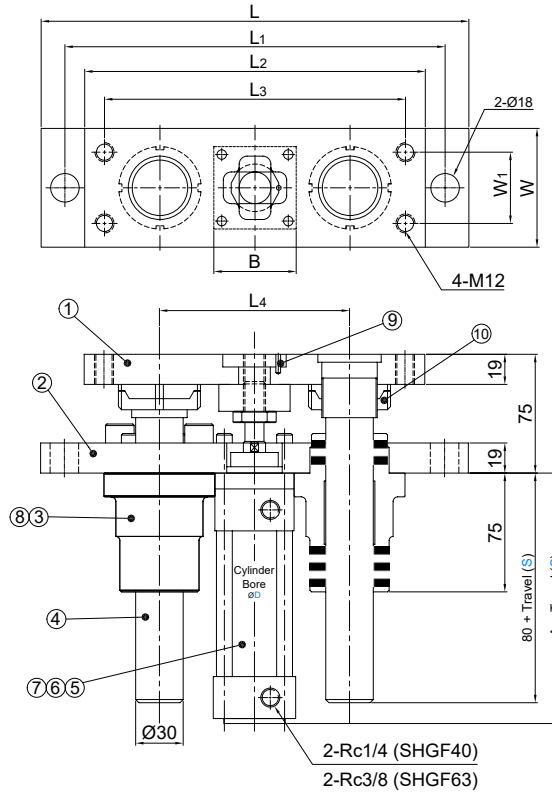

ORDER EXAMPLE Model D - S

25SHGF40-50

Cylinder Inner D	Stroke S	A	B	Rc	L	L1	L2	L3	L4	W	W1
40	50	88	52	1/4	270	240	215	190	120	75	45
	75										
	100										
	125										
	150										
	175										
	200										
	225										
	250										
	275										
	300										
63	50	98	75	3/8	290	260	235	215	145	90	70
	75										
	100										
	125										
	150										
	175										
	200										
	225										
	250										
	275										
	300										

No.	Description	qty	Material and Remark
1	Lifter Plate	1	SS400
2	Cylinder Holder Plate	1	SS400
3	Guide Holder	2	FC250 with Graphite
4	Guide Pin	2	S45C HRC50 - 60
5	Air Cylinder	1	SMC MB40 or MB63
6	Joint	1	S45C
7	Hex Socket Head Bolt	4	M6x35 (D=40)
			M8x35 (D=63)
8	Hex Socket Head Bolt	4	M12 x 35
9	Spring Pin	1	Ø6 x 12
10	Hard Lock Nut	2	M35

SUN RISE technologies
Tel: +662-030-0092 Fax: +662-324-3190 / +662-324-3103
Website: www.sunrisegr.com Email: sale@sunrisegr.com

H-Type Lifter Unit - ลิฟเตอร์ยูนิต (H-Type)

OIL FREE™

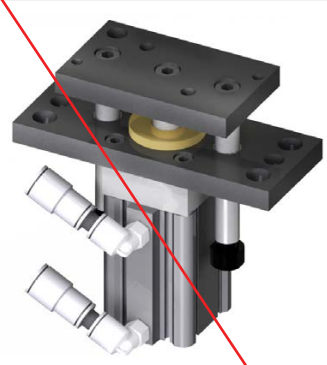

Model: 25SHLS

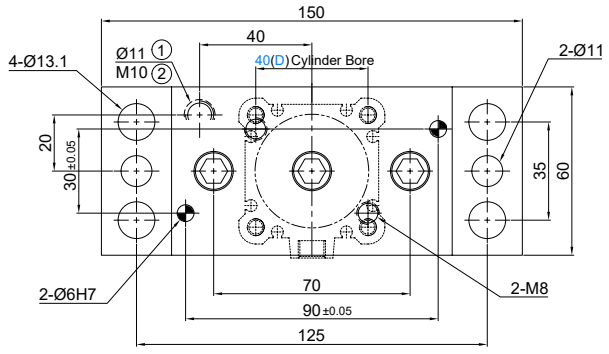

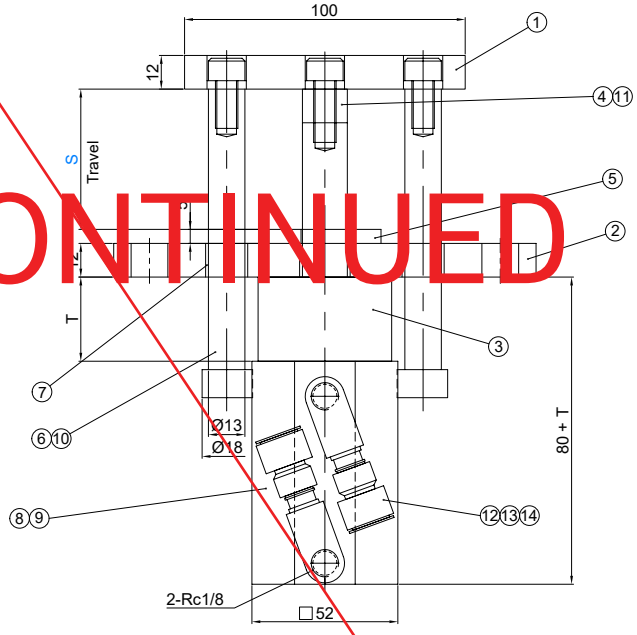

DISCONTINUED

No.	Description	Qty	Material and Remark
1	Lifter Plate	1	SS400
2	Cylinder Holder Plate	1	SS400
3	Block	1	SS400
4	Collar	1	STKM ø16X3.5t
5	Stopper	1	Urethane ø40X5t
6	Guide Pin	2	SUJ2 ø13X70
7	Bushing	2	25SMB013-010

No.	Description	Qty	Material and Remark
8	Air Cylinder	1	CQ2A40-50Z SMC
9	Hexagon Socket Head Bolt	4	SCM435 M6
10	Hexagon Socket Head Bolt	2	SCM435 M8X20
11	Hexagon Socket Head Bolt	1	SCM435 M8X25
12	Elbow	2	KQ2L10-01A SMC
13	Irregular Diameter Union	2	KQ2H10-12A SMC
14	Tube	2	ø10X35

ORDER EXAMPLE: Model D - S → 25SHLS40-20

Model	Cylinder Bore D	Stroke S
25SHLS	40	20
		30

Stroke S	20	30
Block height T	30	20
Cylinder Travel	50	

Mini Lifter Unit - ลิฟเตอร์ยูนิต (Mini-Type)

OIL FREE™



Model: 25MLGT

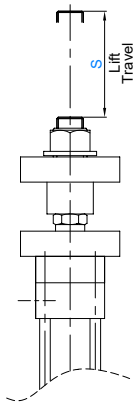

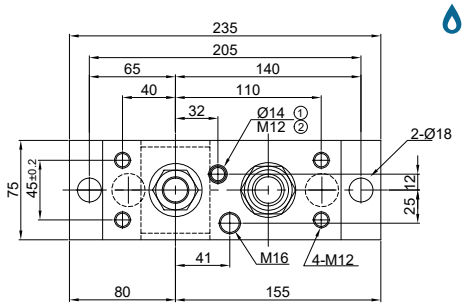

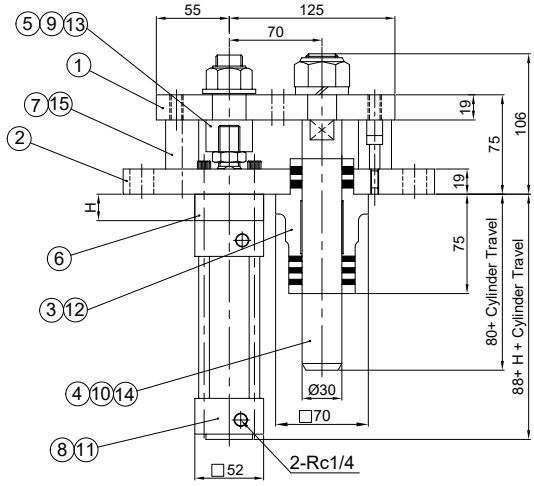

ORDER EXAMPLE: Model D - S → 25MLGT40-50

Model	Cylinder Inner D	Stroke S	H	Cylinder Travel
25MLGT	40	10	40	50
		20	30	
		30	20	
		40	10	
		50	0	
		60	40	100
		70	30	
		80	20	
		90	10	
		100	0	
		110	40	150
		120	30	
		130	20	
		140	10	
		150	0	
		160	40	200
		170	30	
		180	20	
		190	10	
		200	0	
		210	40	250
		220	30	
		230	20	
		240	10	
		250	0	

No.	Description	Qty	Material and Remark
1	Lifter Plate	1	SS400
2	Cylinder Holder Plate	1	SS400
3	Guide Holder	1	FC250 with Graphite
4	Guide Pin	1	S45C (HRC55 - 60)
5	Joint	1	SS400
6	Block	1	SS400
7	Stopper	2	Urethane
8	Air Cylinder	1	MB40 (for S) by SMC
9	U Nut	1	M20
10	U Nut	1	M24
11	Hexagon Socket Head Bolt	4	M6
12	Hexagon Socket Head Bolt	2	M12x35
13	Flat Washer	1	for M20
14	Spring Washer	1	for M24
15	Shoulder Bolt	2	SCM435 M8x20

ชิ้นส่วนประกอบ Accessory Parts

⑥ Block

ORDER EXAMPLE: Model D - S → 25HLSPC40-20

Model	D	H
25HLSPC	40	10
		20
		30
		40

Tel: +662-030-0092 Fax: +662-324-3190 / +662-324-3103
Website: www.sunrisegr.com Email: sale@sunrisegr.com

Embed Lifter Unit - ลิฟเตอร์ยูนิตแบบฝัง

OIL FREE™



Model: 25SFL

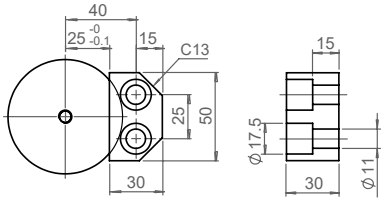

Model: 25SFLN

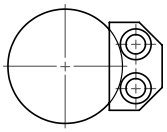

Model: 25SFLT

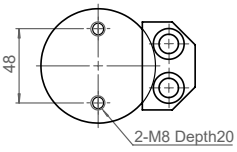

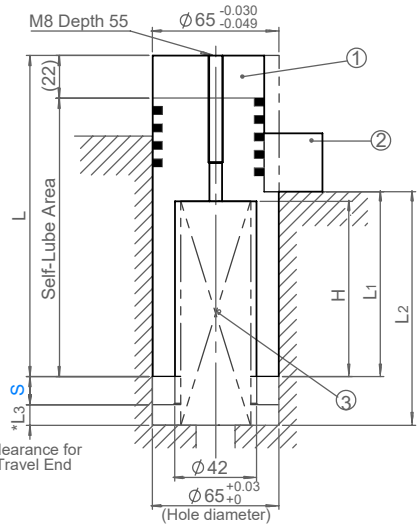



Spring SF40 | SL40

No.	Description	Qty	Material and Remark
①	Silde Pin	1	FC250 with Graphite
②	Stopper	1	SKS3 (HRC58-)
③	Coil Spring	1	SF40 or SL40 spring

ORDER EXAMPLE Model S - Spring
25SFLN40-SF

Model	Stroke S	Spring Type	H	L	L1	SF Type					
						L2	L3	Spring	Initial		Final	
								Free Length	Length	Load (N)	Length	Load (N)
25SFL 25SFLN 25SFLT	15	SF	96	170	100	125	10	150	121	485	106	735
	40				75			175	146	415		988
	60				55			200	166	428		1178

Model	Stroke S	Spring	H	L	L1	SL Type						
						L2	L3	Spring	Initial		Final	
								Free Length	Length	Load (N)	Length	Load (N)
25SFL 25SFLN 25SFLT	15	SL	96	170	100	125	10	150	121	1022	106	1551
	40				75	125	10	175	146	876	106	2084
	60				55	140	25	200	181	502	121	2088

ชิ้นส่วนประกอบ
Accessory Parts

① Silde Pin

ORDER EXAMPLE Model S
25SFL-P40

Model	Stroke S
25SFL-P (for 25SFL) 25SFLN-P (for 25SFLN) 25SFLT-P (for 25SFLT)	15
	40
	60

② Stopper

Order Code
25SFL-S

ระบบเคลื่อนย้ายแม่พิมพ์

Embed Lifter Unit - ลิฟเตอร์ยูนิตแบบฝัง



Model: 25SFLK

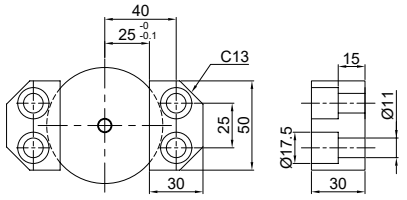

Model: 25SFLKN

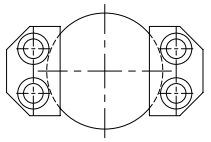

OF OIL FREE™

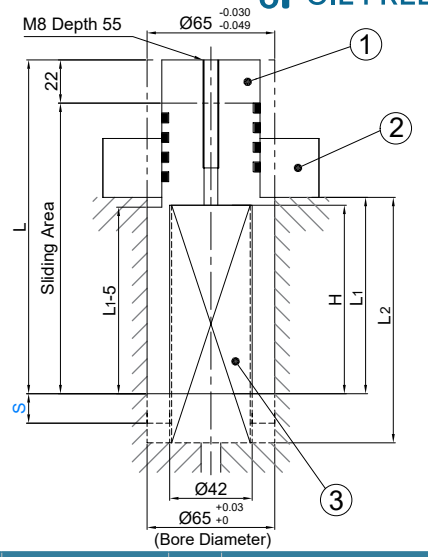



Spring SF40 | SL40

No.	Description	Qty	Material and Remark
①	Silde Pin	1	FCD450 with Graphite
②	Stopper	2	SKS3 (HRC58-)
③	Coil Spring	1	SF40 or SL40 spring

ORDER EXAMPLE: Model S - Spring → 25SFLK40-SF

Model	Stroke S	Spring	H	L	L1	SF Type					
						L2	L3	Spring	Initial		Final	
								Free Length	Length	Load (N)	Length	Load (N)
25SFLK 25SFLKN	15	SF	96	170	100	125	10	150	121	485	106	735
	40				75			175	146	415		988
	60				55			200	166	428		1178
	80		120	200	65	155	10	250	210	401	130	1204
	90				55				220	301		
	100				45				230	201		

Model	Stroke S	Spring	H	L	L1	SL Type					
						L2	L3	Spring	Initial		Final	
								Free Length	Length	Load (N)	Length	Load (N)
25SFLK 25SFLKN	15	SL	96	170	100	125	10	150	121	1022	106	1551
	40				75			175	146	876	106	2084
	60				55	140	25	200	181	502	121	2088
	80		120	200	65	205	60	300	260	705	180	2114
	90				55				270	529		
	100				45				280	352		

ชิ้นส่วนประกอบ Accessory Parts

① Silde Pin

ORDER EXAMPLE: Model S → 25SFLK-P40

Model	Stroke S
25SFLK-P (for 25SFLK) 25SFLKN-P (for 25SFLKN)	15
	40
	60
	80
	90
	100

② Stopper

Order Code
25SFL-S

Tel: +662-030-0092 Fax: +662-324-3190 / +662-324-3103
Website: www.sunrisegr.com Email: sale@sunrisegr.com

Embed Lifter Unit - ลิฟเตอร์ยูนิตแบบฝัง

OIL FREE™



Model: 25SFLG

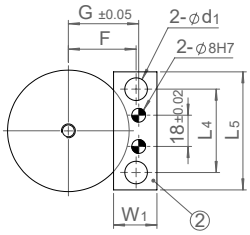

Model: 25SFLGN

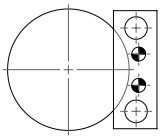

Model: 25SFLGT

D = 80 only

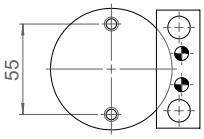

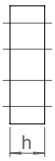

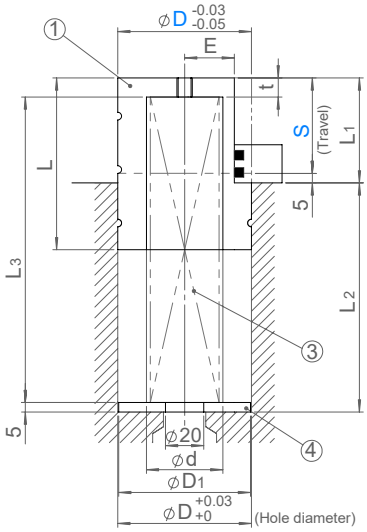



Spring SF | SL

ORDER EXAMPLE: Model D - S - Spring → 25SFLG65-15-SF

No.	Description	Qty	Material and Remark
①	Silde Pin	1	FC250
②	Stopper	1	S45C with Graphite
③	Coil Spring	1	SF or SL spring
④	Washer	1	S45C

Model	D	Stroke S	Spring	L	L1	t	d	E	F	G	Spring OD
25SFLG 25SFLGN 25SFLGT	65	15	SF SL	90	55	10	37	25	39	40	35
	80	40		140	85	15	53	32	49	49	50
		60		180	125	30					

D	Stroke S	SF Type							SL Type						
		L2	L3	Spring	Initial		Final		L2	L3	Spring	Initial		Final	
				Free Length	Length	Load (N)	Length	Load (N)			Free Length	Length	Load (N)	Length	Load (N)
65	15	115	155	175	155	219	105	767	115	155	175	155	464	105	1623
80	40	165	230	250	230	314	150	1569	165	230	250	230	662	150	3311
	60	195	285	300	285	196	165	1764	240	330	350	330	473	210	3311

ชิ้นส่วนประกอบ
Accessory Parts

① Silde Pin

ORDER EXAMPLE: Model D - S → 25SFLG-P65-15

Model	D	Stroke S
25SFLG-P (for 25SFLG) 25SFLGN-P (for 25SFLGN)	65	15
	80	40
		60

② Stopper

ORDER EXAMPLE: Model D → 25SFLG-S

Model	D	W1	L5	h	L4	d1
25SFLG-S	65	25	68	20	48	13
	80	30	80	50	54	18

③ Washer

ORDER EXAMPLE: Model D → 25SFLG-W65

Model	D	D1
25SFLG-W	65	63
	80	78

ระบบเคลื่อนย้ายแม่พิมพ์

Embed Lifter Unit - ลิฟเตอร์ยูนิตแบบฝัง



OIL FREE™

Model: 25SKIL

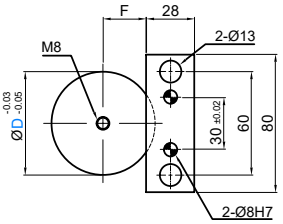

Model: 25SKILN

ไม่ยึดกับลิฟท์บล็อค
Not attached to Liftblock

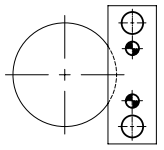

Model: 25SKILT

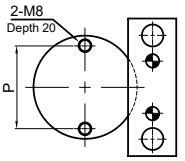



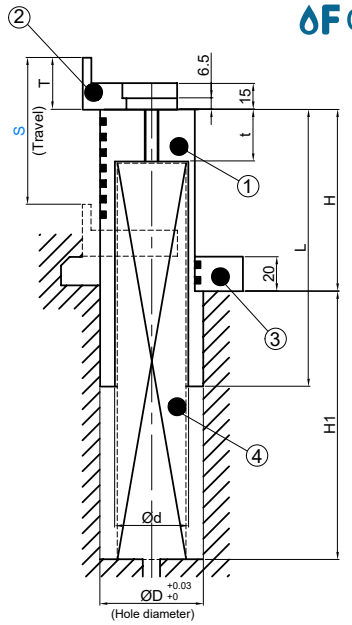

No.	Description	Qty	Material and Remark
①	Silde Pin	1	S20C with Graphite
②	Stopper	1	SKS3
③	Coil Spring	1	SF or SL spring
④	Washer	1	S45C (HRC18 - 22)

ORDER EXAMPLE: Model D - S - Spring → 25SKILT50-55-SF

Spring SF | SL

Model	D	Stroke S	Spring Type	L	d	F	t	H	H1	P	Spring OD
25SKIL 25SKILN 25SKILT	50	50	SF SL	110	33	19	25	75	105	39	30
	60	80		160	43	25	30	105	155	48	40
	75	100		200	53	30	40	125	195	55	50

D	Stroke S	SF Type					SL Type				
		Spring	Initial		Final		Spring	Initial		Final	
		Free Length	Length	Load (N)	Length	Load (N)	Free Length	Length	Load (N)	Length	Load (N)
50	50	175	155	162	105	566	175	155	339	105	1188
60	80	250	230	201	150	1003	250	230	423	150	2114
75	100	300	280	261	180	1568	300	280	552	180	3311

ชิ้นส่วนประกอบ
Accessory Parts

① Silde Pin

ORDER EXAMPLE: Model D - S → 25SKIL-P50-50

Model	D	Stroke S
25SKIL-P (for 25SKIL) 25SKILN-P (for 25SKILN) 25SKILT-P (for 25SKILT)	50	50
	60	80
	75	100

② Lift Block

ORDER EXAMPLE: Model W → 25SKIL-BA45

Model	W	Slide Pin D	T	A	B	P
25SKIL-BA	45	50	30	-	-	-
	50	60				
	60	75				
25SKIL-BB	52	50	40	58	40	39
	62	60		64	40	48
	75	75		80	55	55

Model: 25SKIL-BA

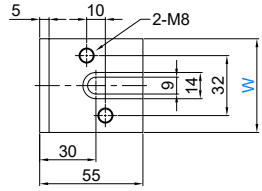

Model: 25SKIL-BB

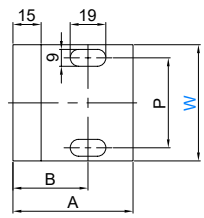

③ Stopper

Order Code
25SKIL-S

Tel: +662-030-0092 Fax: +662-324-3190 / +662-324-3103
Website: www.sunrisegr.com Email: sale@sunrisegr.com

Embed Lifter Unit - ลิฟเตอร์ยูนิตแบบฝัง

OIL FREE™



Model: 25LGIL

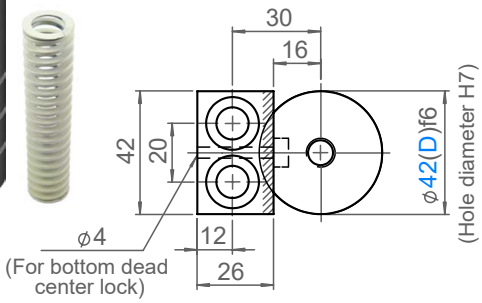

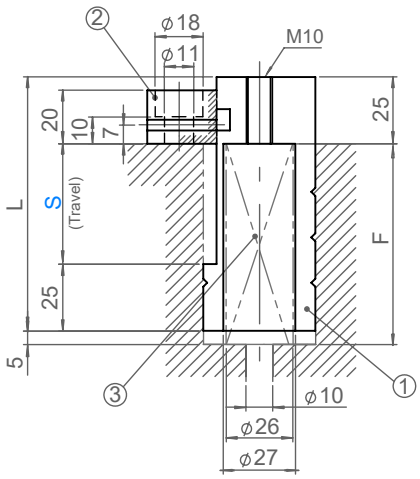

Model: 25LGILN

ไม่มีรูต๊าปเกลียว
Without Tap

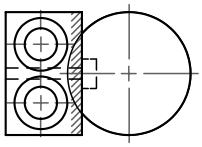

No.	Description	Qty	Material and Remark
①	Silde Pin	1	S45C
②	Stopper	1	S45C (HRC50-)
③	Coil Spring	1	SSR26 spring

ORDER EXAMPLE: Model D - S → 25LGIL42-40

Model	D	Stroke S	F	L	Spring		
					OdxL	Initial Load (N)	Final Load (N)
25LGIL 25LGILN	42	40	70	90	26x125	97	355
		60	90	110	26x175	115	392

ชิ้นส่วนประกอบ
Accessory Parts

① Silde Pin

ORDER EXAMPLE: Model D - S → 25LGIL-P42-40

Model	D	Stroke S
25LGIL-P (for 25LGIL) 25LGILN-P (for 25LGILN)	42	40
		60

② Stopper

Order Code
25LGP-T

ระบบเคลื่อนย้ายแม่พิมพ์

Embed Lifter Unit for Progressive Die - ลิฟเตอร์ยูนิตแบบฝัง

OF OIL FREE™



Model: 25PGLI

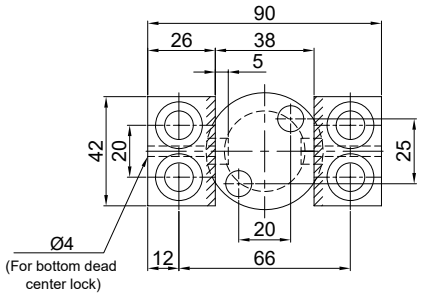

Model: 25PGLIN

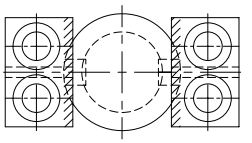

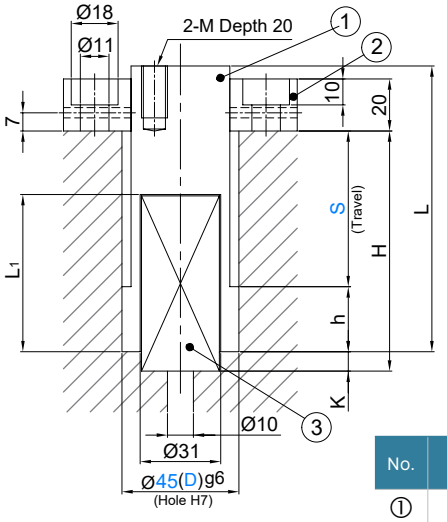

No.	Description	Qty	Material and Remark
①	Silde Pin	1	S45C
②	Stopper	2	S45C HRC50-
③	Coil Spring	1	SF spring

ORDER EXAMPLE Model D - S
25PGLI45-60

Model	D	Stroke S	H	K	L	L1	h	Spring		
								OdxL	Initial Load (N)	Final Load (N)
25PGLI 25PGLIN	45	40	74	9	90	60	25	30x125	181	637
		60	92.5	7.5	110	75	25	30x150	71	
		80	120	5	140	105	35	30x200	71	

ชิ้นส่วนประกอบ
Accessory Parts

① Silde Pin

ORDER EXAMPLE Model D - S
25PGL-P45-60

Model	D	Stroke S
25PGLI-P (for 25PGLI) 25PGLIN-P (for 25PGLIN)	45	40
		60
		80

Tel: +662-030-0092 Fax: +662-324-3190 / +662-324-3103
Website: www.sunrisegr.com Email: sale@sunrisegr.com

Lifter Guide Post Set - ชุดลิฟเตอร์ไกด์โพส

OIL FREE™

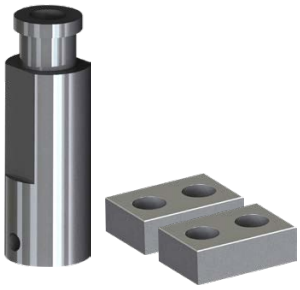

Model: 25LGPS
Whole Set
(Guide Post + Stopper Block + Stopper Plate)

Model: 25LSB
Stopper Block

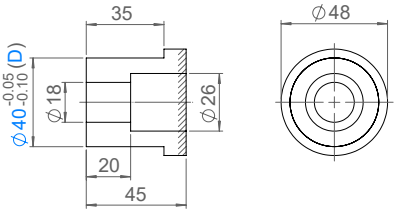

Model: 25LGPP-T
Stopper Plate

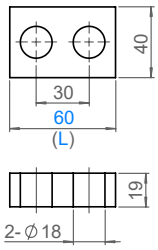

Model: 25LGP-T
Lifter Guide Post

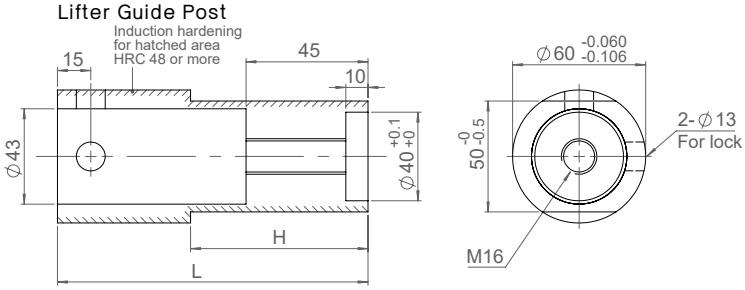

ORDER EXAMPLE Model D — 25LSB40

Model	D
25LSB	40

ORDER EXAMPLE Model L — 25LGPP-T60

Model	L
25LGPP-T	60

ORDER EXAMPLE Model S — 25LGPS60

Model	Stroke S	L	H
25LGPS 25LGP-T	40	120	80
	60	140	100
	80	160	120

Model	Qty	Material and Remark
25LGP-T	1	S45C (HRC48+)
25LSB	1	S45C with Bolts
25LGPP-T	2	S45C

Lifter Guide Post Set - ชุดลิฟเตอร์ไกด์โพส

OIL FREE™

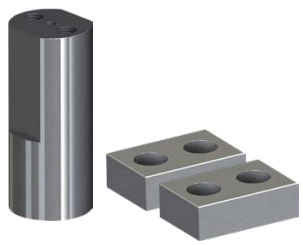

Model: 25LGPPS
Whole Set
(Guide Post + Stopper Plate)

Model: 25LGPP-T
Stopper Plate

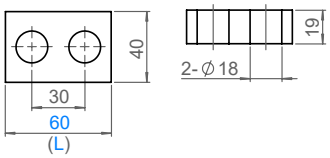

ORDER EXAMPLE Model L — 25LGPP-T60

Model	L
25LGPP-T	60

Model: 25LGPP-P
Lifter Guide Post

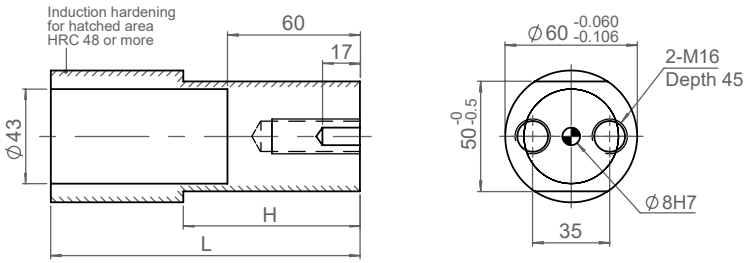

ORDER EXAMPLE Model S — 25LGPPS60

Model	Stroke S	L	H
25LGPPS 25LGPP-P	40	140	80
	60	160	100

Model	Qty	Material and Remark
25LGPP-P	1	S45C (HRC48+)
25LGPP-T	2	S45C

Lifter Components - ชิ้นส่วนลิฟเตอร์

OIL FREE™



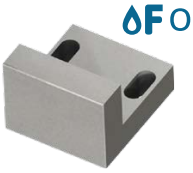

Model: 25SKIL-B
Lift Block

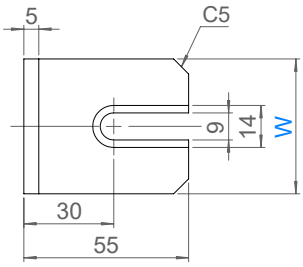

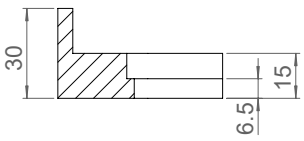

Model: 25SKIL-BA
Lift Block w/ hole (A)

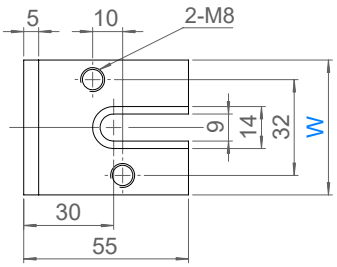

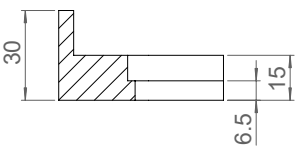

Model: 25SKIL-BB
Lift Block w/ hole (B)

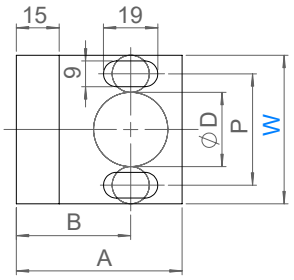

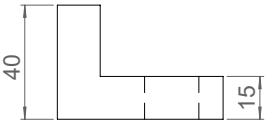

ORDER EXAMPLE Model W (M) SKS3
25SKIL-BB52

Model	W
25SKIL-B 25SKIL-BA	45
	50
	60

Model	W	A	B	P	D
25SKIL-BB	52	58	40	39	26
	62	64	40	48	35
	75	80	55	55	42

Model: 25SFSG
Side Gauge

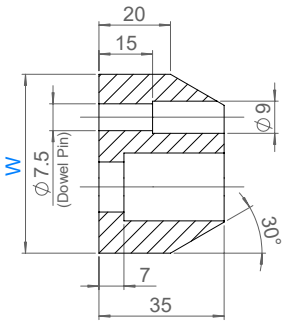

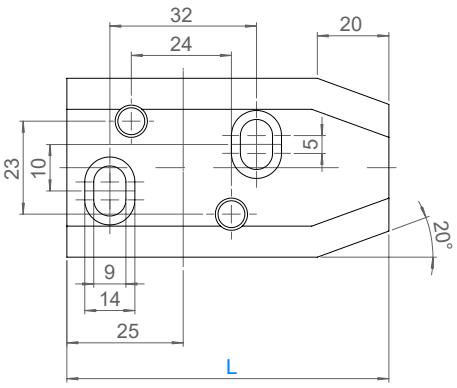

(M) S45C

ORDER EXAMPLE Model W - L
25SFSG45-75

Model	W	L
25SFSG	45	75

SUN RISE technologies
Tel: +662-030-0092 Fax: +662-324-3190 / +662-324-3103
Website: www.sunrisegr.com Email: sale@sunrisegr.com

Lifter Components - ชิ้นส่วนลิฟเตอร์

OF OIL FREE™

Model: 25SFRG
Rear Gauge

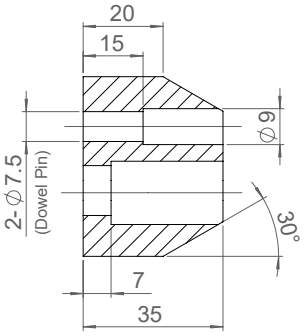

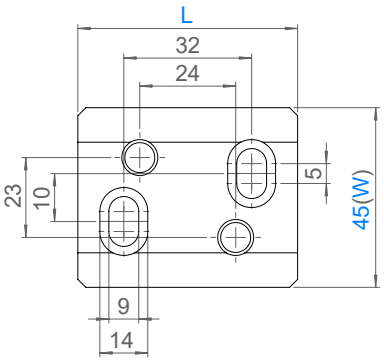

Ⓜ S45C

ORDER EXAMPLE | Model | W - L | 25SFRG45-55

Model	W	L
25SFRG	45	50
		55

Model: 25SFLPA
Advance Pin

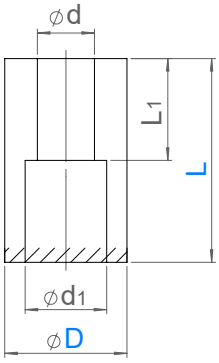

ORDER EXAMPLE | Model | D - L | 25SFLPA30-80

Ⓜ S45C

Induction Harden

Model	D	L 10mm increment	d	d1	L1	Recommended Bolt	Lift Block W	Lift Block D
25SFLPA	25	40 ~ 60	9	14	20	M8x35	52	26
		70 ~ 100			40	M8x55		
	30	50 ~ 60	13	20	25	M12x50	62	35
		70 ~ 100			45	M12x70		
		70 ~ 100			65	M12x90		
	35	50 ~ 60	13	20	25	M12x50	75	42
		70 ~ 100			45	M12x70		
		70 ~ 100			65	M12x90		

Bell Crank Lifter Parts (Bearing Set) - ชุดแบริ่งสำหรับ Bell Crank

OIL FREE™



Model: 25SBCRA
Iron Bushing

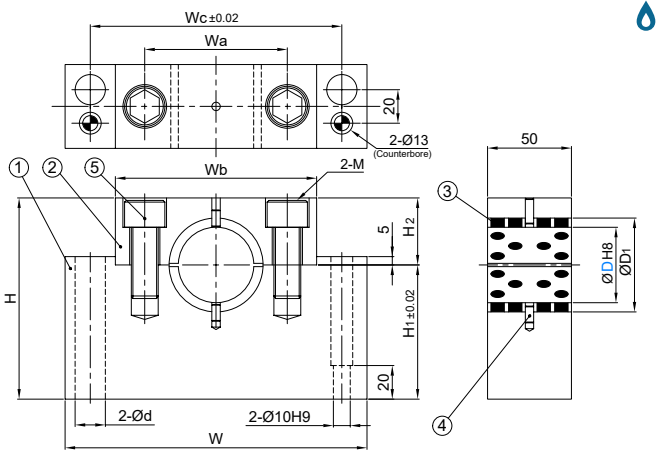

No.	Description	Qty	Material and Remark
①	Case Body	1	SS400
②	Cap	1	SS400
③	Bushing (half)	1	FC250 with Graphite
④	Dowel Pin	2	SUJ2 ø5 X 10
⑤	Hexagon Socket Head Bolt	2	SCM435

ORDER EXAMPLE: Model D 25SBCRA35

Model	D H8		W	Wa	Wb	Wc	H	H1	H2	D1	d	M
25SBCRA	25	+0.033 0	130	80	55	105	85	60	25	33	13	12
	35	+0.039 0	170	110	75	140	105	70	35	44	18	16
	45		180	120	85	150	120	80	40	56	18	16

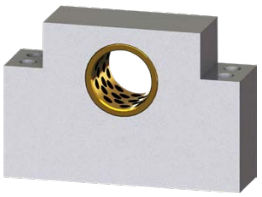

Model: 25SBCRB
Copper Alloy Bushing

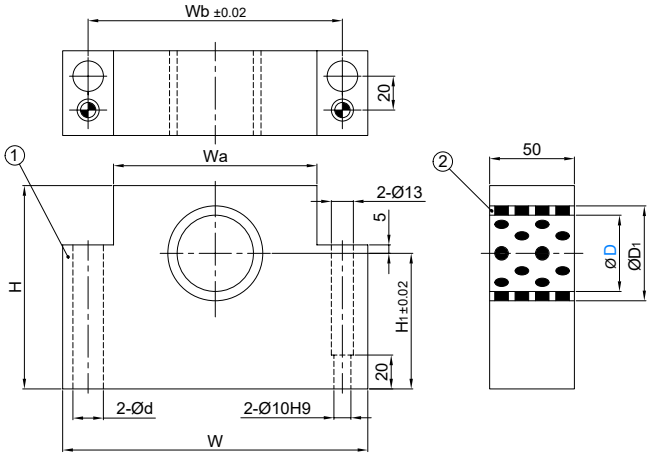

No.	Description	Qty	Material and Remark
①	Case Body	1	SS400
②	Bushing	1	Copper Alloy with Graphite

ORDER EXAMPLE: Model D 25SBCRB35

Model	D Tolerance		W	Wa	Wb	H	H1	D1	d
25SBCRB	25	+0.025 0	130	80	105	85	60	33	13
	35	+0.030 0	170	110	140	105	70	44	18
	45		180	120	150	120	80	56	18

SUN RISE technologies
Tel: +662-030-0092 Fax: +662-324-3190 / +662-324-3103
Website: www.sunrisegr.com Email: sale@sunrisegr.com

Bell Crank Lifter Parts (Shaft) - ชาฟสำหรับ Bell Crank

OF OIL FREE™



Model: 25SBCHA

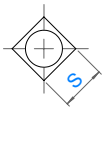

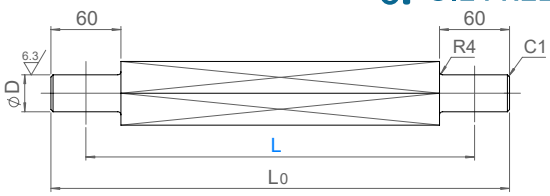

Model: 25SBCHB

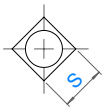

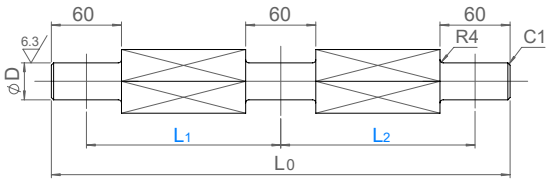

Model: 25SBCHC



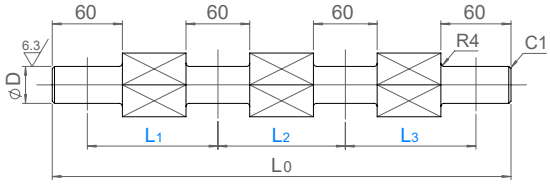

ORDER EXAMPLE | Model | S - L - L1 - L2 - L3 | 25SBCHB28-500-600 | Ⓜ SS400

Model	S Tolerance		L, L1, L2, L3	D Tolerance		L0
25SBCHA 25SBCHB 25SBCHC	28	0 -0.2	1mm increment The sum must not exceed L0	25	-0.065 -0.117	25SBCHA L0 ≤ 1600
	38			35		
	50			45	-0.080 -0.142	25SBCHB & 25SBCHC L0 ≤ 2000

Bell Crank Lifter Parts (Arm Block) - ชิ้นส่วนสำหรับ Bell Crank

OF OIL FREE™

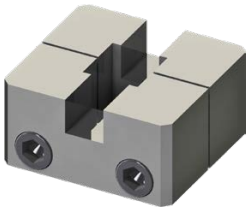

Model: 25SBCBC

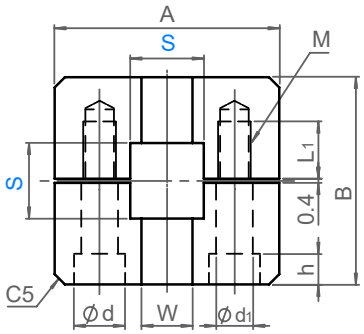

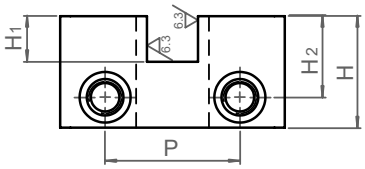

ORDER EXAMPLE | Model | D | 25SBCBC38 | Ⓜ SS400

Model	S		A	B	W		d	d1	h	M	L1	H	H1	H2	P
25SBCBC	28	+0.013 0	75	70	20	+0.052 0	20	13	13	12	25	50	20	35	50
	38	+0.016 0	90	80	30						30	55	25	40	65
	50		110	100	40	+0.062 0	26	18	18	16	35				80

Bell Crank Lifter Parts (Lifter Arm) - แขนยกสำหรับ Bell Crank

OIL FREE™



Model:
25SBCLA

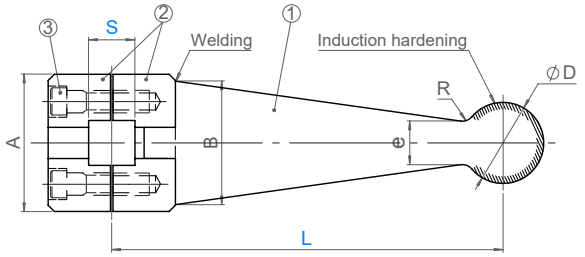

Model:
25SBCLB

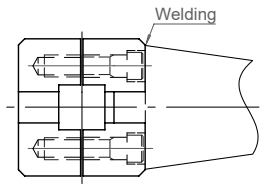

No.	Description	Qty	Material and Remark
①	Lifter Arm	1	S45C
②	Arm Block	1	SS400
③	Hexagon Socket Head Bolt	2	SCM435

ORDER EXAMPLE: Model S - L
25SBCLA38-150

Model	S	L 10mm increment	A	B	D	e	R	t
25SBCLA 25SBCLB	28	100 - 300	75	60	40	25	10	15
	38	100 - 400	90	80	50	30	20	20
	50	100 - 600	110	100	50	30	20	20

Bell Crank Lifter Parts (Shaft Arm) - ชุดแบริ่งสำหรับ Bell Crank

OIL FREE™



Model:
25SBCSA

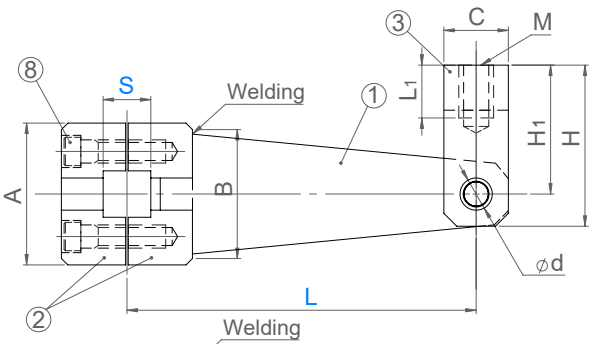

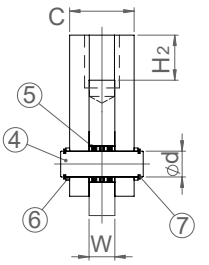

Model:
25SBCSB

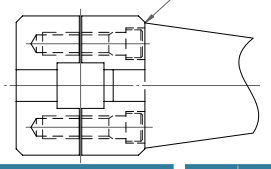



No.	Description	Qty	Material and Remark
①	Shaft Arm	1	SS400
②	Arm Block	1	SS400
③	Joint	1	S45C
④	Joint Pin	1	S45C

No.	Description	Qty	Material and Remark
⑤	Oilless Bushing	1	Copper Alloy with Graphite
⑥	Washer	2	
⑦	C type Retaining Ring	2	
⑧	Hexagon Socket Head Bolt	2	SCM435

ORDER EXAMPLE: Model S - L - Screw Thread
25SBCSA38-110-R

Model	S	L 10mm increment	Screw Thread (joint area)	A	B	C	H	H1	H2	L1	d	W	M	t
25SBCSA 25SBCSB	28	100 - 300	R (Right Hand) L (Left Hand)	75	60	40	95	75	25	30	16	16	M20x2.5	15
	38	100 - 400		90	80	50	110	85	35	40	20	20	M24x3.0	20
	50	100 - 600		110	100	50	110	85	35	40	20	20	M27x3.0	20

SUN RISE technologies
Tel: +662-030-0092 Fax: +662-324-3190 / +662-324-3103
Website: www.sunrisegr.com Email: sale@sunrisegr.com

Bell Crank Lifter Parts (Arm & Joint) - แขนยกสำหรับ Bell Crank

OIL FREE™

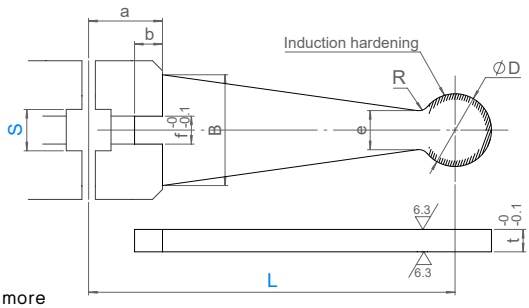

Model: 25SBCL

ORDER EXAMPLE: Model S - L → 25SBCL38-110

Ⓜ S45C HRC55 or more

Model	S	L 10mm increment	a	b	B	e	f	D	R	t
25SBCL	28	100 - 300	35	15	60	25	20	40	10	15
	38	100 - 400	40	15	80	30	30	50	20	20
	50	100 - 600	50	20	100	30	40	50	20	20

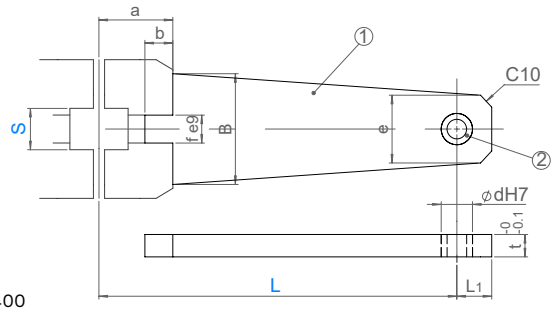

Model: 25SBCS

ORDER EXAMPLE: Model S - L → 25SBCS38-110

① Ⓜ SS400
② Copper Alloy with Graphite

Model	S	L 10mm increment	a	b	B	e	f e9		d H7		L1	t
25SBCS	28	100 - 300	35	15	60	40	20	-0.04 -0.092	22	-0.04 -0.092	20	16
	38	100 - 400	40	15	80	45	30	-0.04 -0.092	28	-0.04 -0.092	22.5	20
	50	100 - 600	50	20	100	50	40	-0.05 -0.112	28	-0.05 -0.112	25	20

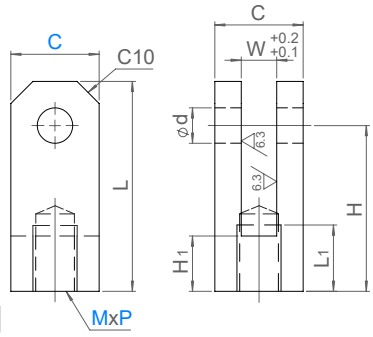

Model: 25SBCJ Ⓜ SS400

ORDER EXAMPLE: Model C - M - P - Screw Thread → 25SBCJ40-18-1.5-R

Model	C	M	P	Screw Thread (joint area)	L1	L	H	H1	d		W	For Cylinder Diameter
25SBCJ	40	18	1.5	R (Right Hand) L (Left Hand)	30	95	75	25	16	+0.018 0	16	D63
		20	2.5									
	50	22	1.5		40	110	85	35	20	+0.021 0	20	D80 D100
		24	3.0									
		27	1.5									D125
			3.0									

Bell Crank Lifter Parts (Joint Pin) - จ๊อยพินสำหรับ Bell Crank

OIL FREE™



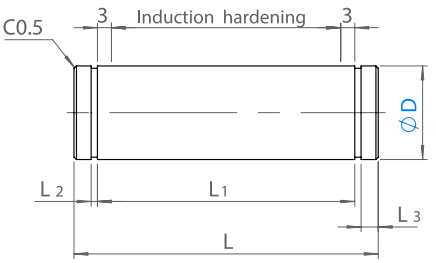

Model: 25SBCJP

ORDER EXAMPLE | Model | D | 25SBCJP20

Ⓜ S45C
HRC55 or more

Model	D		d		L	L1	L2		L3	For Cylinder Diameter
25SBCJP	16	0 -0.027	15.2	0 -0.11	53	46.5	1.15	+0.14 0	2.7	D63
	20	0 -0.033	19	0 -0.21	65	56.5	1.35	+0.14 0	2.9	D80, D100, D125

Bell Crank Lifter Parts (Bush Holder) - บุชโฮลเดอร์สำหรับ Bell Crank

OIL FREE™

Model: 25SBCBHA



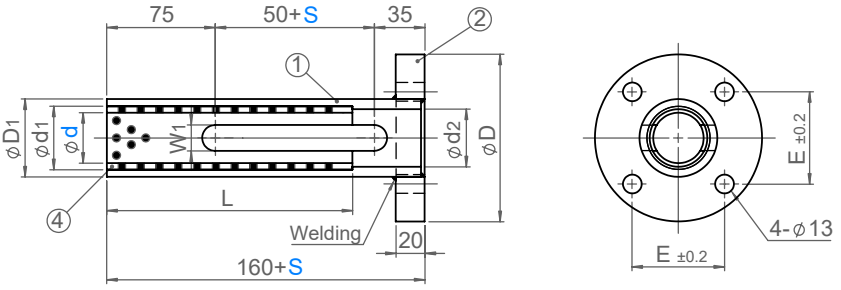

Model: 25SBCBHB



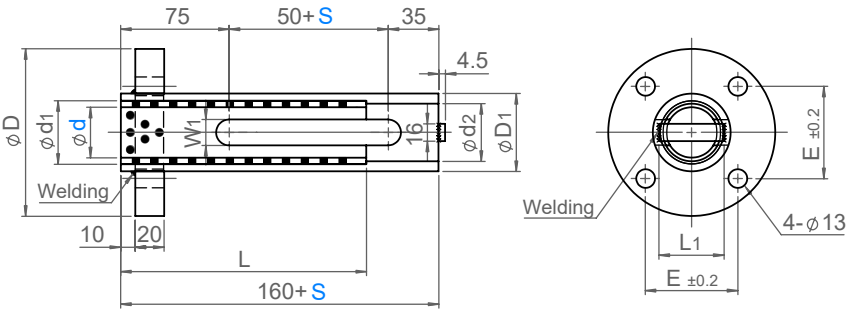

ORDER EXAMPLE | Model | d - S | 25SBCBHA35-125

①
②③ Ⓜ STB33
SS400
④ FC250 with Graphite

Model	d		Stroke S 1mm increment	D	D1	d1	d2	L		W1	E	L1
								S ≤ 200	200 < S ≤ 350			
25SBCBHA 25SBCBHB	35	+0.10 +0.05	S ≤ 350	116	54	44	40	150	200	18	64	45
	50			135	76.2	62	60.2			23	78	70

SUN RISE technologies
Tel: +662-030-0092 Fax: +662-324-3190 / +662-324-3103
Website: www.sunrisegr.com Email: sale@sunrisegr.com

Bell Crank Lifter Parts (Guide Post) - ไกด์โพสสำหรับ Bell Crank

OF OIL FREE™



Model: 25SBCP

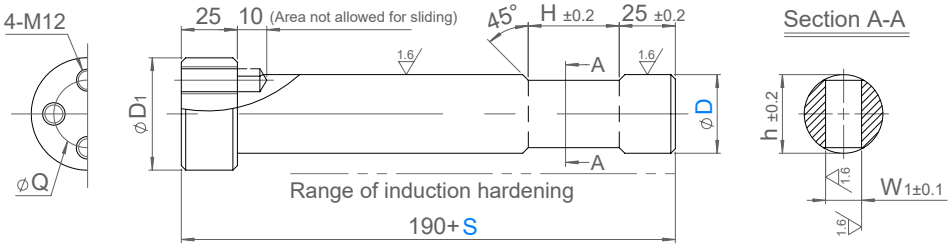

ORDER EXAMPLE Model D - S 25SBCP35-200

M S45C HRC55 or more

Model	D		Stroke S 1mm increment	D1	Q	H	W1	h
25SBCP	35	-0.050 -0.112	S ≤ 400	50	30	40.5	16	30
	50			65	45	50.5	21	42

Bell Crank Lifter Parts (Connecting Rod) - คอนเนคเตอร์สำหรับ Bell Crank

OF OIL FREE™



Model: 25SBCCR

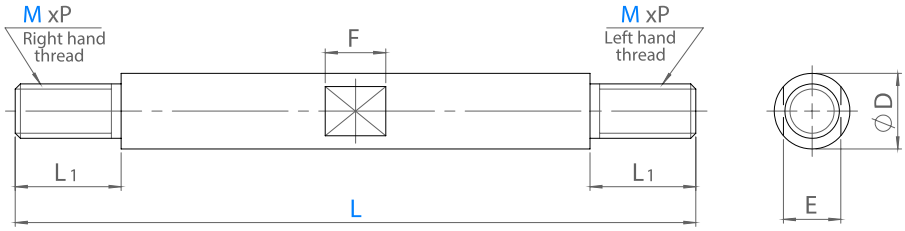

ORDER EXAMPLE Model D - S 25SBCCR24-300

M SS400

Model	M	L 1mm increment	D	P	L1	E	F
25SBCCR	20	L ≤ 350	25	2.5	30	19	20
	24		30	3	40	24	25
	27		35	3	40	30	30

ระบบเคลื่อนย้ายแม่พิมพ์

Pusher Unit - พุชเซอร์ยูนิต

OF OIL FREE™



Model: 25SODP

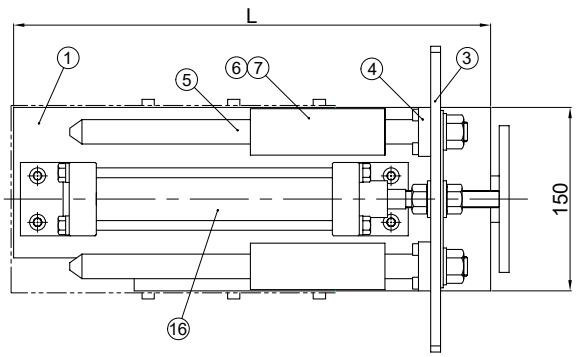

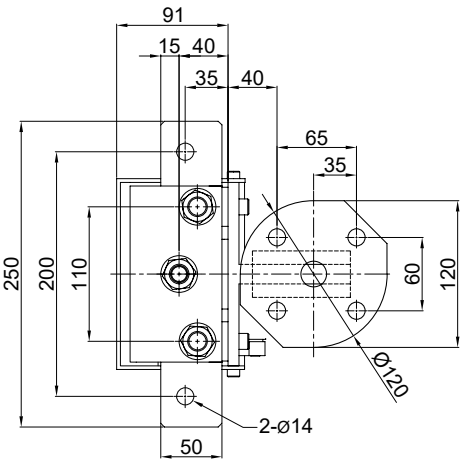

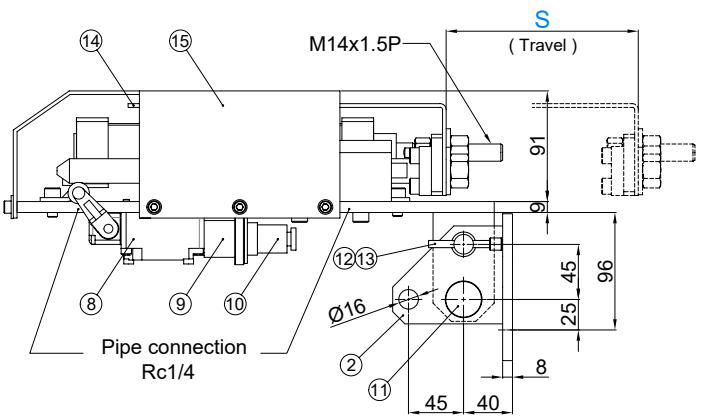

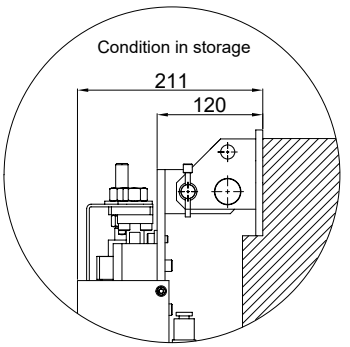

No.	Description	Qty	Material and Remark
1	Base Plate	1	SS400
2	Bracket	1	SS400
3	Connector Plate	1	SS400
4	Set Plate	2	SS400
5	Guide Pin	2	S45C
6	Bushing Holder	2	SS400
7	Guide Bushing	4	FC250 with Graphite
8	Limit Switch	1	WLCA2 Omron

No.	Description	Qty	Material and Remark
9	Connector Holder	1	SS400
10	Connector	1	NCS-252P/R Nanaboshi
11	Joint Pin	1	S45C
12	Stopper Pin	1	S45C
13	Chain	1	Height : 200 mm
14	Cover	1	SPC
15	Cover	1	SPC
16	Air Cylinder	1	SCA2-LB-40B CKD

ORDER EXAMPLE | Model | S - L | 25SODP150-390

Model	Stroke S	L
25SODP	150	390
	250	490

SUN RISE technologies
Tel: +662-030-0092 Fax: +662-324-3190 / +662-324-3103
Website: www.sunrisegr.com Email: sale@sunrisegr.com

Pusher Unit - พุชเชอร์ยูนิต

OIL FREE™



Model: 25SOSP

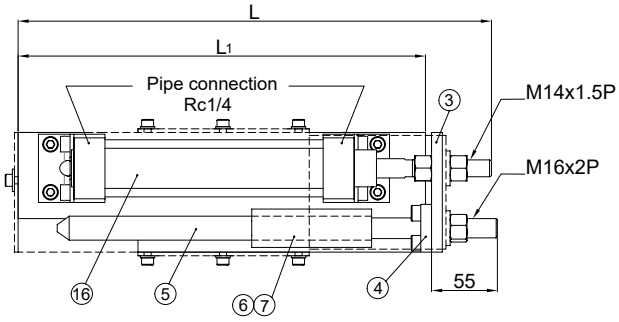

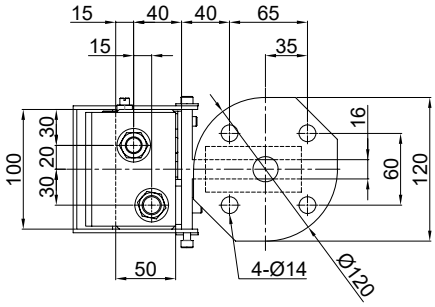

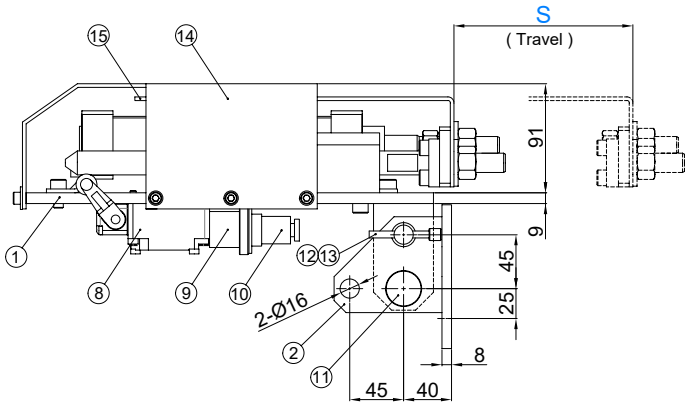

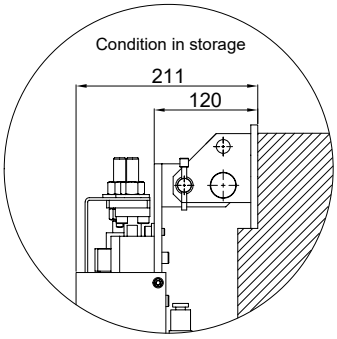

No.	Description	Qty	Material and Remark
1	Base Plate	1	SS400
2	Bracket	1	SS400
3	Connector Plate	1	SS400
4	Set Plate	1	SS400
5	Guide Pin	1	S45C
6	Bushing Holder	1	SS400
7	Guide Bushing	2	FC250 with Graphite
8	Limit Switch	1	WLCA2 Omron

No.	Description	Qty	Material and Remark
9	Connector Holder	1	SS400
10	Connector	1	NCS-252P/R Nanaboshi
11	Joint Pin	1	S45C
12	Stopper Pin	1	S45C
13	Chain	1	Height : 200 mm
14	Cover	1	SPC
15	Cover	1	SPC
16	Air Cylinder	1	SCA2-LB-40B CKD

ORDER EXAMPLE | Model | S | 25SOSP150

Model	Stroke S	L	L1
25SOSP	150	395	340
	250	495	440

ระบบเคลื่อนย้ายแม่พิมพ์

Pusher Unit - พุชเซอร์ยูนิต

OIL FREE™



Model: 25APSG

Model	Type
25APSG-B	with bracket
25APSG	without bracket

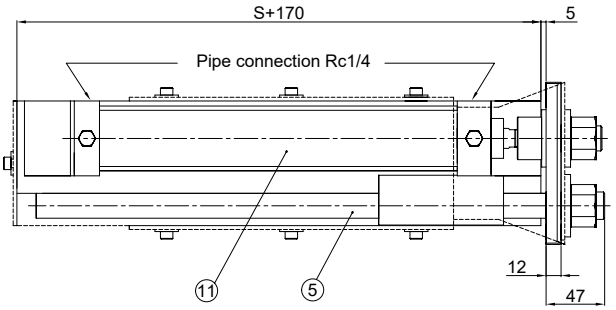

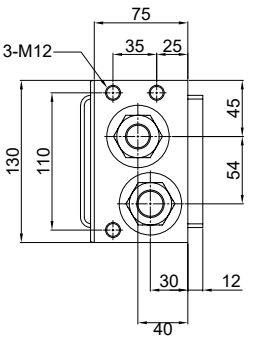

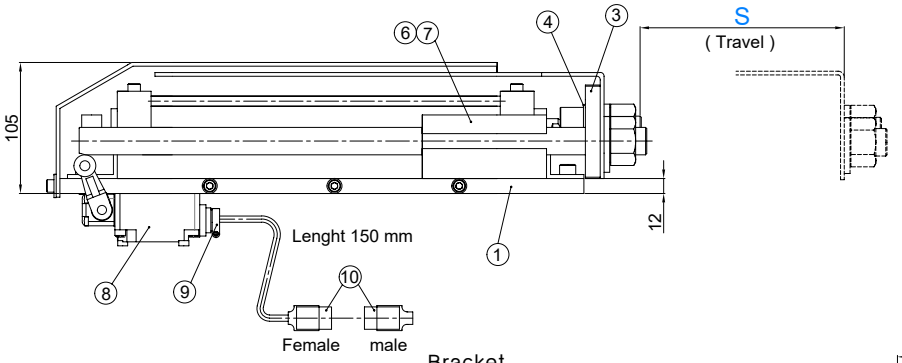

Bracket

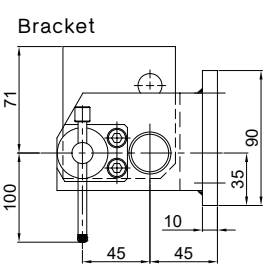

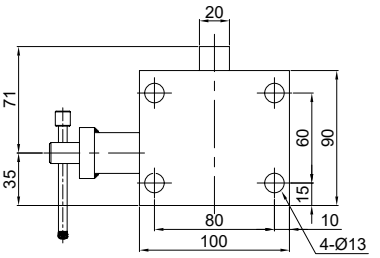

No.	Description	Qty	Material and Remark
1	Base Plate	1	SS400
2	Bracket	1	SS400
3	Connector Plate Mounting	1	SS400
4	Collar	1	SS400
5	Guide Pin	1	S45C Ø22
6	Guide Holder (upper)	1	Copper Alloy with Graphite

No.	Description	Qty	Material and Remark
7	Guide Holder (lower)	1	Copper Alloy with Graphite
8	Limit Switch	1	WLCA2 Omron
9	Cable Clamp	1	KB-01
10	Nylon Connector Set	1	
11	Air Cylinder	1	CA2L40

ORDER EXAMPLE: Model S — 25APSG-B200

Model	Stroke S
25APSG-B (with bracket) 25APSG (without bracket)	150 / 200 / 250 / 300 / 350 / 400 / 500

SUN RISE technologies
Tel: +662-030-0092 Fax: +662-324-3190 / +662-324-3103
Website: www.sunrisegr.com Email: sale@sunrisegr.com

Swivel Adapter for Pusher Unit - อแดปเตอร์สำหรับพุชเชอร์ยูนิต

OIL FREE™



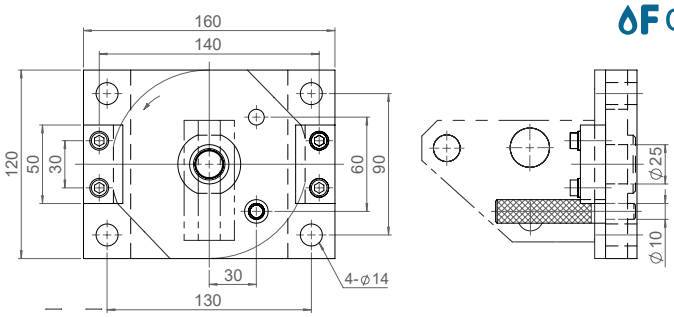

Model: 25ADR

Order Code
25ADR

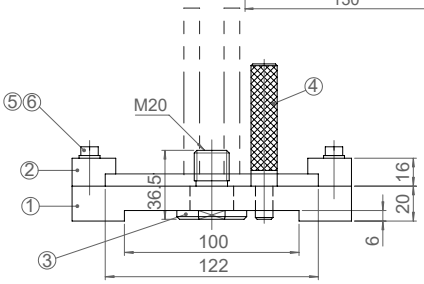

No.	Description	Qty	Material and Remark
①	Base Plate	1	SS400
②	Slid Guide	2	SS400
③	Support Pin	1	SS45C
④	Fixed Pin	1	SS45C
⑤	Hexagon Socket Head Bolt	4	SCM435 M8 X 35
⑥	Spring Washer	4	SCM435 For M8

Spring Head for Pusher Unit - ชิ้นส่วนหัวพุชเชอร์ยูนิต

OIL FREE™



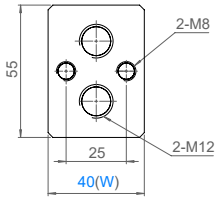

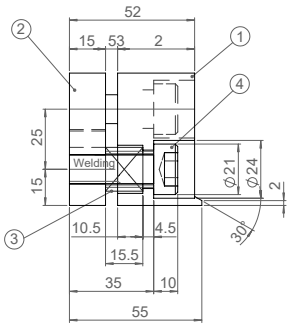

Model: 25SO-PSH

ORDER EXAMPLE	Model	W
	25SO-PSH40	

Model	W	Load N (kgf)	
		min	max
25SO-PSH	40	37.8 (3.9)	79.8 (8.1)

No.	Description	Qty	Material and Remark
①	Pusher Plate	1	SS400
②	Connector Plate	1	SS400
③	Spring	2	SWPA ø20 X L20
④	Hanger Bolt	2	SCM435 with Bushing
⑤	Dowel Pin	2	S45 ø4 X 8

Pusher Unit Connector Plate - เพลทสำหรับพุชเชอร์ยูนิต

OIL FREE™



Model: 25CNP-APSG

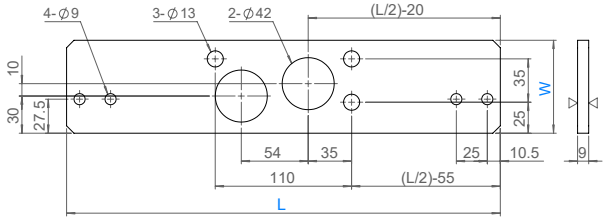

Model: 25CNP-SODP

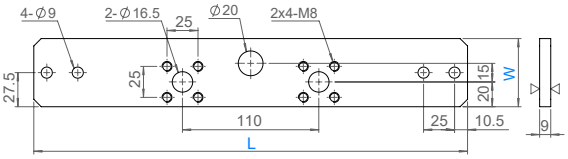

ORDER EXAMPLE	Model	W - L
	25CNP-APSG75-225	

Ⓜ SS400

Model	W	L 1mm increment
25CNP-APSG	75	220 - 600
25CNP-SODP	55	250 - 600

ระบบเคลื่อนย้ายแม่พิมพ์

Shredder Unit - เชร็ดเดอร์ยูนิต



Model: 25SDA

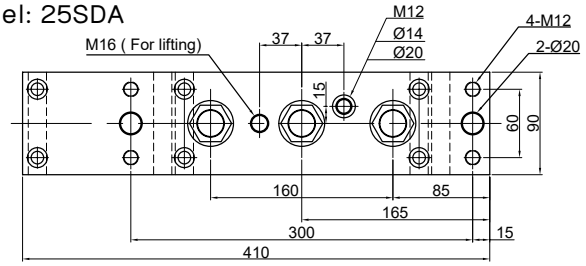

OIL FREE™

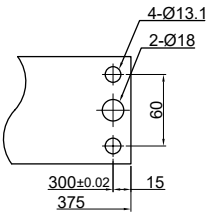

View B

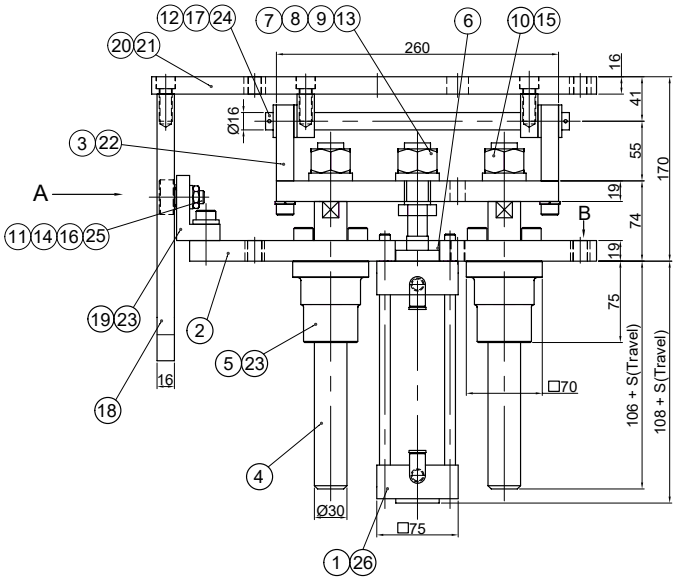

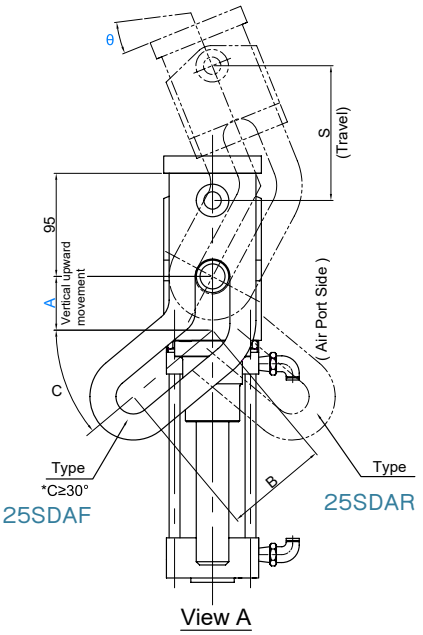

View A

No.	Description	Qty	Material and Remark
1	Air Cylinder	1	MB63 SMC
2	Cylinder Holder Plate	1	SS400
3	Lifter Plate	1	SS400
4	Guide Pin	2	S45C HRC55 to 60
5	Guide Holder	2	FC250 with Graphite
6	Collar	1	STKM
7	Spacer	1	SS400
8	Hexagon Nut	1	M20
9	Hexagon Nut (3 Types)	2	M20
10	Hexagon Nut	2	M24
11	Flat Washer	1	For M12
12	Flat Washer	4	For M16
13	Flat Washer	1	For M20

No.	Description	Qty	Material and Remark
14	Spring Washer	1	For M12
15	Spring Washer	2	For M24
16	Cam Follower	1	KR32LL By NTN
17	Straight Pin	1	S45C HRC55 to 60
18	Shedder	1	SS400
19	Bracket	1	SS400
20	Head Plate	1	SS400
21	Sun Rise TechBolt	6	M10X25
22	Sun Rise TechBolt	4	M10X40
23	Sun Rise TechBolt	6	M12X30
24	Cotter Pin	2	ø3X32
25	Hexagon Nut	1	M12X1.5 (3 Types)
26	Elbow	2	

ORDER EXAMPLE — Model: ST - A - Angle

25SDAF125-60-10

Model	ST 25mm increments	A 10mm increment	Angle 1° increment
25SDAF 25SDAR	100 - 300	50 - 200	10° - 25°

SUN RISE technologies
Tel: +662-030-0092 Fax: +662-324-3190 / +662-324-3103
Website: www.sunrisegr.com Email: sale@sunrisegr.com

Shredder Unit - เชร็ดเดอร์ยูนิต

OIL FREE™



Model: 25SDB

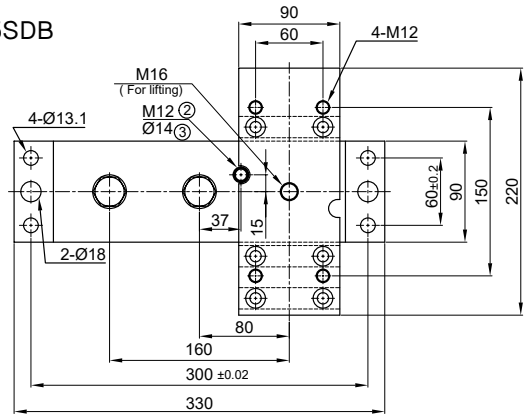

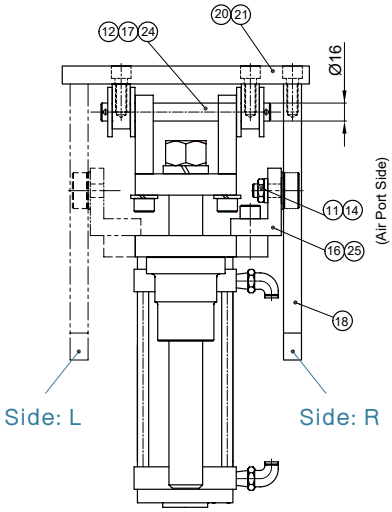

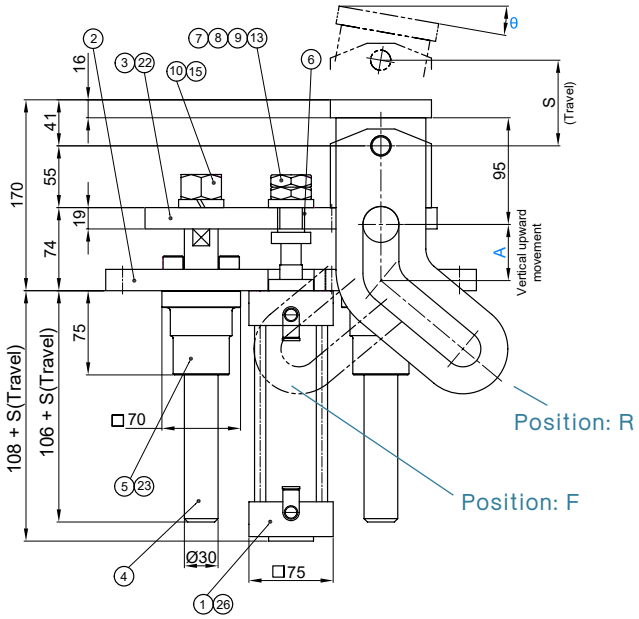

No.	Description	Qty	Material and Remark
1	Air Cylinder	1	MB63 SMC
2	Cylinder Holder Plate	1	SS400
3	Lifter Plate	1	SS400
4	Guide Pin	2	S45C HRC55 to 60
5	Guide Holder	2	FC250 with Graphite
6	Collar	1	STKM
7	Spacer	1	SS400
8	Hexagon Nut	1	M20
9	Hexagon Nut (3 Types)	2	M20
10	Hexagon Nut	2	M24
11	Flat Washer	1	For M12
12	Flat Washer	4	For M16
13	Flat Washer	1	For M20

No.	Description	Qty	Material and Remark
14	Spring Washer	1	For M12
15	Spring Washer	2	For M24
16	Cam Follower	1	KR32LL By NTN
17	Straight Pin	1	S45C HRC55 to 60
18	Shedder	1	SS400
19	Bracket	1	SS400
20	Head Plate	1	SS400
21	Sun Rise TechBolt	6	M10X25
22	Sun Rise TechBolt	4	M10X40
23	Sun Rise TechBolt	6	M12X30
24	Cotter Pin	2	ø3X32
25	Hexagon Nut	1	M12X1.5 (3 Types)
26	Elbow	2	

ORDER EXAMPLE: Model ST - A - Angle — 25SDBRF125-60-10

Model	Side	Position	ST 25mm increment	A 10mm increment	Angle 1° increment
25SDB	L R	F R	100 - 300	50 - 200	10° - 25°

ระบบเคลื่อนย้ายแม่พิมพ์

Hook for Transport - หูหิ้วขนส่ง

OIL FREE™

Model: 25DVJ

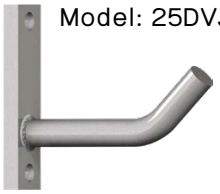

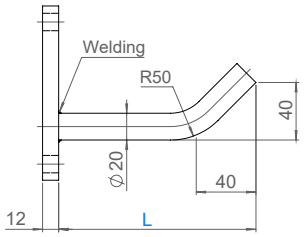

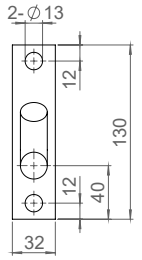

Ⓜ SS400

ORDER EXAMPLE: Model L — 25DVJ100

Model	L
25DVJ	100
	150

Model: 25DKLH



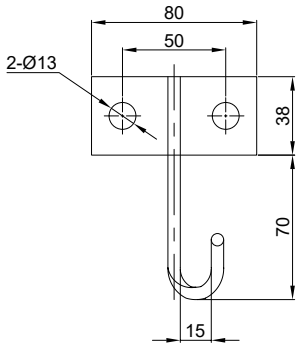

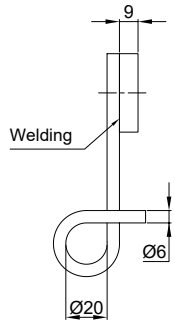

Ⓜ SS400

ORDER EXAMPLE: Model No. — 25DKLH80

Model	No.
25DKLH	80

Lifting Bars - ลิฟติ้งบาร์

OIL FREE™

Model: 25HLFB



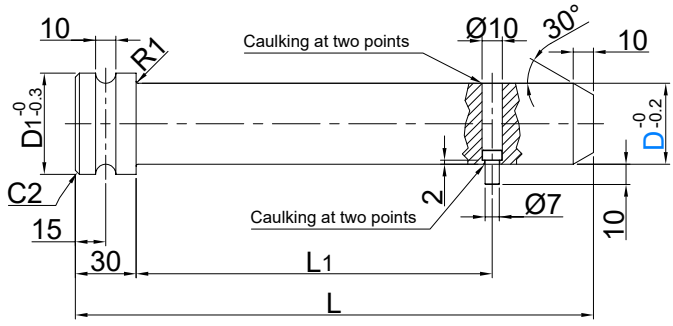

ORDER EXAMPLE: Model D — 25HLFB35

Ⓜ S45C
Come with Stopper

ให้สต๊อปเปอร์หันลงเสมอ และอย่าให้บาร์ยื่นออกมาเกินตัวดาย
Stopper must face downward and the bar must not protrude out.

Model	D	D1	L	L1	Max Allowable Load (4 bars are used)	
					N	kgf
25HLFB	25	34	185	135	29420	3000
	35	44	240	190	49033	5000
	40	50	260	210	88260	9000
	50	60	290	240	137293	14000
	65	75	335	285	166712	17000

SUN RISE technologies
Tel: +662-030-0092 Fax: +662-324-3190 / +662-324-3103
Website: www.sunrisegr.com Email: sale@sunrisegr.com

Cast-In Lifting Bolts - ลิฟติ้งโบลท์ แบบล็อคเข้ากับแม่พิมพ์

OIL FREE™

Model: 25CSN



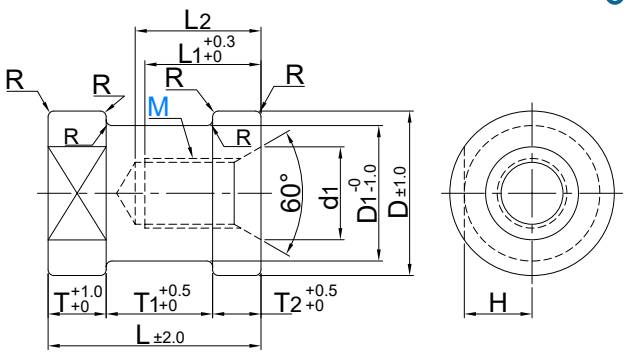

ORDER EXAMPLE: Model D — 25CSN20 — Ⓜ S35C

Model	M	Thread MxP	D	D1	d1	L1	L2	L	T	T1	T2	H	R	Max Allowable Load (2 Lifting Bolts)	
														N	kgf
25CSN	12	M12x1.75	38	28	18	30	40	55	10	30	15	14	2	3730	380
	16	M16x2.0	46	36	22	35	45	55	10	30	15	18	2	6620	675
	20	M20x2.5	48	38	28	45	55	70	15	35	20	19	2	8830	900
	24	M24x3.0	55	45	36	55	65	85	20	45	20	22.5	2	13340	1360
	30	M30x3.5	65	52	42	65	75	95	25	50	20	26	3	19810	2020
	36	M36x4.0	85	70	48	75	90	110	30	55	25	35	3	58450	5960

Bolt Die Hooks - หูหิ้วแม่พิมพ์ แบบโบลท์

OIL FREE™



Model: 25HBT



Model: 25HBTL

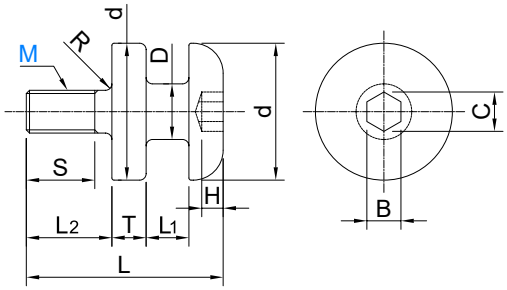

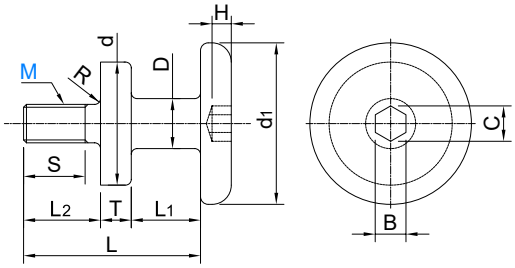

ORDER EXAMPLE: Model D — 25HBT20 — Ⓜ S45C Blackening

⚠ ค่าโหลดสำหรับเหล็กเหนียว ค่า Safety Factor 10
The Max Allowable Load is for Steel, Safety Factor 10

Model	M	Thread MxP	D	d	d1	L1		L2	S	T	L		R	H	B	C	Max Allowable Load	
						25HBT	25HBTL				25HBT	25HBTL					N	kgf
25HBT 25HBTL	10	M10x1.5	13	32	42	10	18	20	16	8	46	54	1.5	5	8	9.2	2452	250
	12	M12x1.75	16	36	48	13	20	24	20	10	57	64	1.5	6	10	11.7	3530	360
	16	M16x2.0	20	40	52	18	25	30	25	13	75	82	2	9	14	16.3	6669	680
	20	M20x2.5	25	48	62	20	28	37	32	16	90	98	2	12	17	19.8	10395	1060
	24	M24x3.0	32	58	6	25	33	47	40	20	111	119	2.5	13	19	22.1	15004	1530
	30	M30x3.5	36	68	88	30	40	56	48	22	131	141	3	16	22	25.6	23830	2430
	36	M36x4.0	40	78	100	30	40	68	58	25	148	158	3	18	27	31	34814	3550

ระบบเคลื่อนย้ายแม่พิมพ์

Plate Type Die Hooks - หูหิ้วแม่พิมพ์ แบบเพลท

OIL FREE™

Model: 25HPT



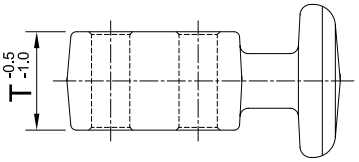

D = 10 ~ 40

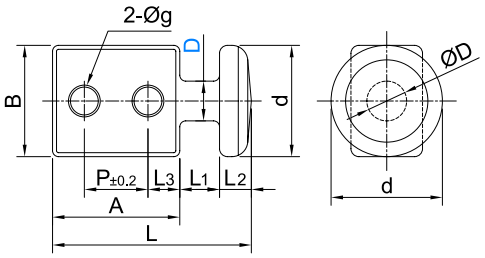

D = 50

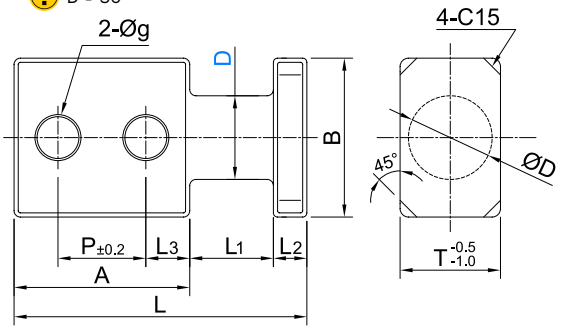

D = 63

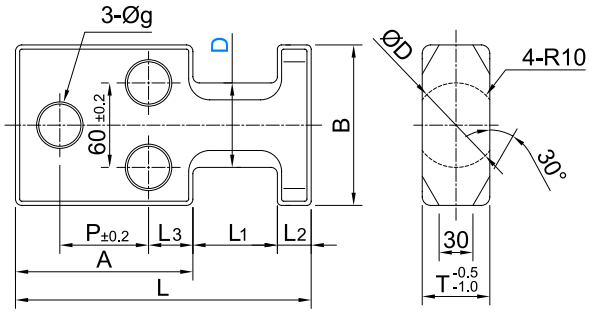

D = 80

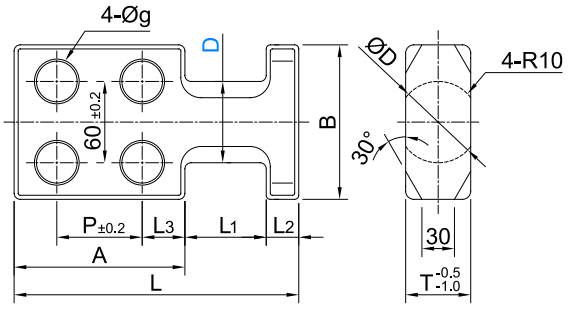

ORDER EXAMPLE | Model: D | 25HPT25

M SS400

ค่าโหลดสำหรับเหล็กเหนียว ค่า Safety Factor 10
The Max Allowable Load is for Steel, Safety Factor 10

ใช้โบลท์รุ่น 24CB
Use with bolt 24CB

Model	D	d	B	T	L	A	L1	L2	L3	P	g	Max Allowable Load	
												N	kgf
25HPT	10	28	28	18	50	32	10	8	8	16	7	1569	160
	12	32	32	20	56	38	10	8	10	18	9	3530	360
	16	36	36	24	67	46	13	8	12	22	11	4511	460
	20	40	40	26	88	60	18	10	15	30	14	5492	560
	25	48	48	35	92	60	20	12	15	30	14	6570	670
	32	55	55	40	118	80	25	13	20	40	18	12160	1240
	40	70	70	50	138	93	30	15	24	45	22	19123	1950
	50	-	90	50	170	115	35	20	30	55	26	27459	2800
	63	-	115	50	175	115	40	20	30	55	26	39227	4000
	80	-	140	50	185	120	40	25	30	60	26	50995	5200

SUN RISE technologies
Tel: +662-030-0092 Fax: +662-324-3190 / +662-324-3103
Website: www.sunrisegr.com Email: sale@sunrisegr.com

Large Head Plate Type Die Hooks - หูหิ้วแม่พิมพ์ แบบเพลท หัวใหญ่

OIL FREE™

Model: 25HPTL



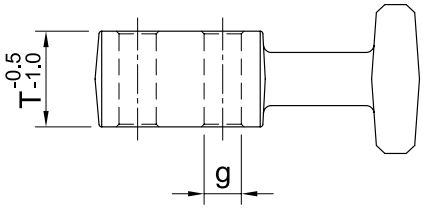

D = 10 ~ 40

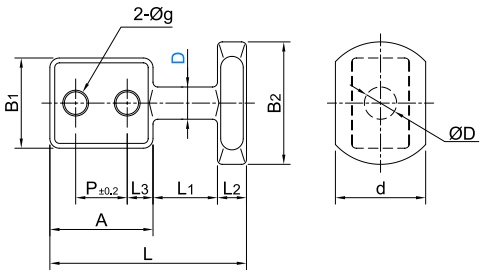

D = 50

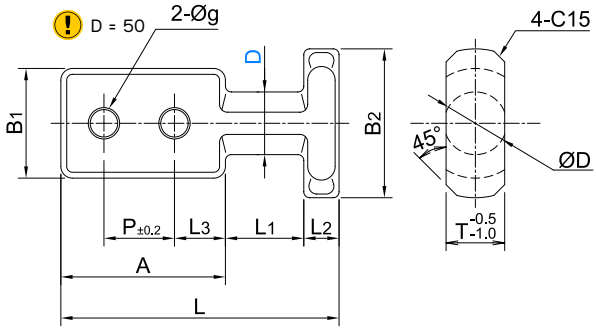

D = 63

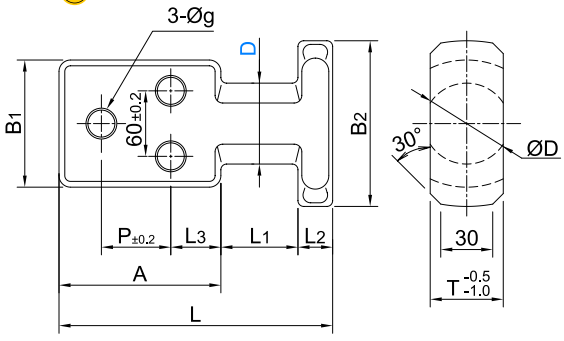

D = 80

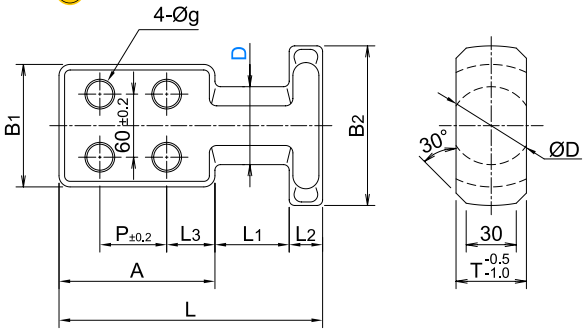

ORDER EXAMPLE | Model | D | 25HPTL25

M SS400

ค่าโหลดสำหรับเหล็กเหนียว ค่า Safety Factor 10
The Max Allowable Load is for Steel, Safety Factor 10

ใช้โบลท์รุ่น 24CB
Use with bolt 24CB

Model	D	d	B1	B2	T	L	A	L1	L2	L3	P	g	Max Allowable Load	
													N	kgf
25HPTL	10	28	28	38	18	61	32	20	9	8	16	7	1569	160
	12	32	32	44	20	67	38	20	9	10	18	9	3530	360
	16	36	36	50	24	78	46	20	12	12	22	11	4511	460
	20	40	40	56	26	97	60	25	12	15	30	14	5492	560
	25	48	48	68	35	98	60	25	13	15	30	14	6570	670
	32	55	55	77	40	125	80	30	15	20	40	18	12160	1240
	40	70	70	100	50	143	93	35	15	24	45	22	19123	1950
	50	-	90	120	50	170	115	35	20	30	55	26	27459	2800
	63	-	115	155	50	175	115	40	20	30	55	26	39227	4000
	80	-	140	180	50	185	120	40	25	30	60	26	50995	5200

Roller Carriers - รางโรลเลอร์

OF OIL FREE™



ORDER EXAMPLE: Model - A → 25BCR16-10

① Ball Roller Unit

② Ⓜ SPC

Model: 25BCR16

Ball Ø15.875mm (5/8")

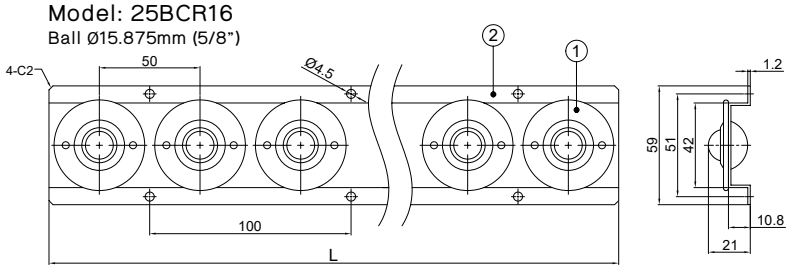

Model	A No. Rollers	L
25BCR16	4	200
	6	300
	8	400
	10	500
	12	600
	14	700
	16	800
	18	900
	20	1000
	22	1100
	24	1200

Model: 25BCR25

Ball Ø25.4mm (1")

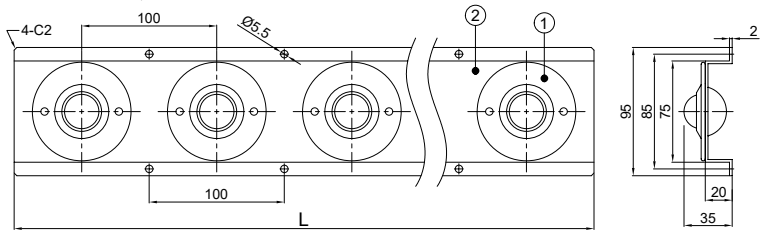

Model	A No. Rollers	L
25BCR25	6	600
	8	800
	10	1000
	12	1200
	14	1400
	16	1600
	18	1800

ชิ้นส่วนทดแทน
Replacement Parts



Order Code	Ball d	
25SSBRS16	15.875mm	5/8"
25SSBRS25	25.4mm	1"

Roller Carriers (Fit Type) - รางโรลเลอร์แบบฝัง

OF OIL FREE™

Model:
25BCRP16

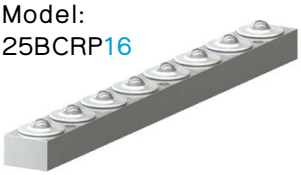

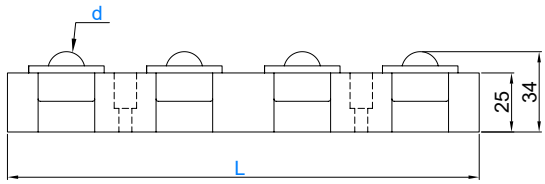

ชิ้นส่วนทดแทน
Replacement Parts



Order Code
25SSBRP16

ORDER EXAMPLE: Model d - L → 25BCRP16-400

Ⓜ Aluminum Ball Bearing

Model	d	L	Ball No.
25BCRP	16	200	4
		400	8
		600	12

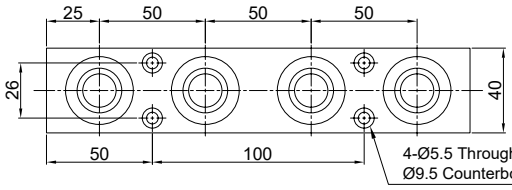

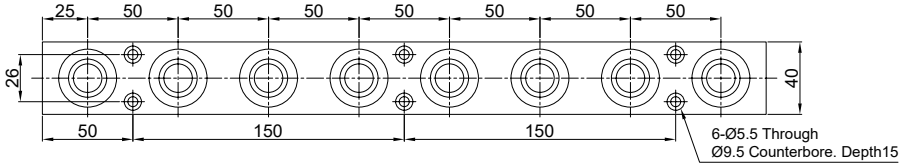

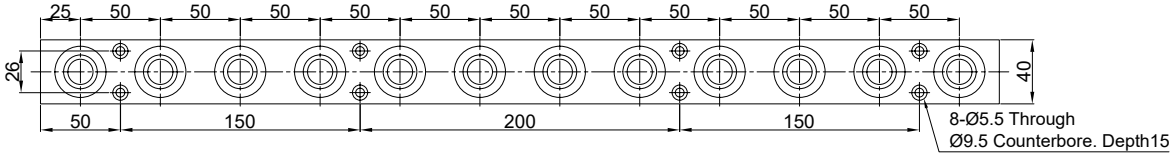

SUN RISE technologies
Tel: +662-030-0092 Fax: +662-324-3190 / +662-324-3103
Website: www.sunrisegr.com Email: sale@sunrisegr.com

Roller Carriers (Fit Type) - รางโรลเลอร์แบบฝัง

Model:
25BCRP22

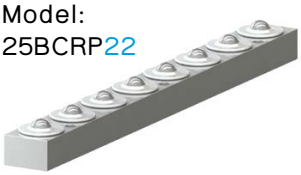

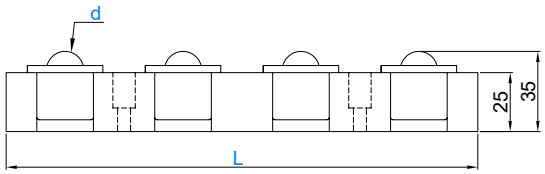

OIL FREE™

ชิ้นส่วนทดแทน
Replacement Parts



Order Code
25SSBRP22

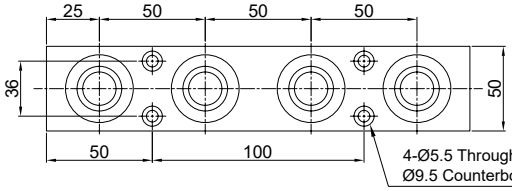

ORDER EXAMPLE | Model | d - L | 25BCRP22-400

Ⓜ Aluminum Ball Bearing

Model	d	L	Ball No.
25BCRP	22	200	4
		400	8
		600	12

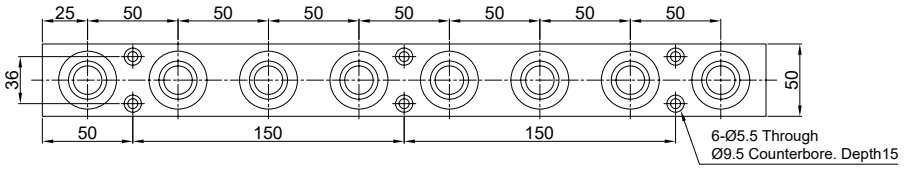

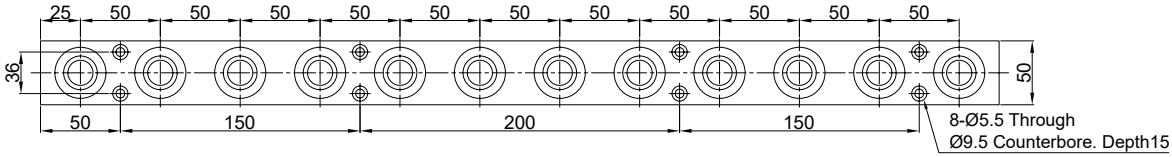

Ball Roller Carriers - รางบอลโรลเลอร์

Model: 25CHI



OIL FREE™

ORDER EXAMPLE | Model | - A | 25CHI26-10

① Ⓜ SPC
② Ball Bearing

Model	A No. Wheels	L
25CHI26 / 25CHI30	3	105
	4	140
	5	175
	6	210
	7	245
	8	280
	9	315
	10	350
	11	385
	12	420
	13	455
	14	490
	15	525
	16	560
	17	595
	18	630
	19	665
	20	700
	21	735
	22	770
	23	805
	24	840
	25	875
	26	910
	27	945
	28	980

Model: 25CHI26
Wheel Ø25.4mm

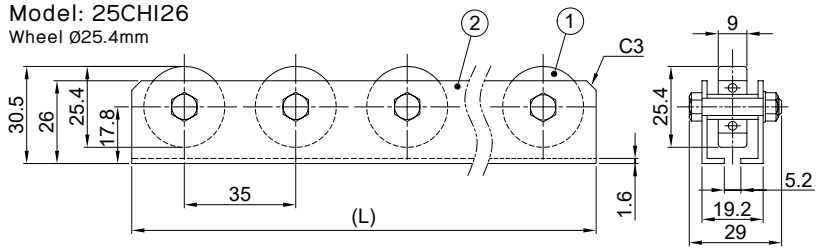

Model: 25CHI30
Wheel Ø30mm

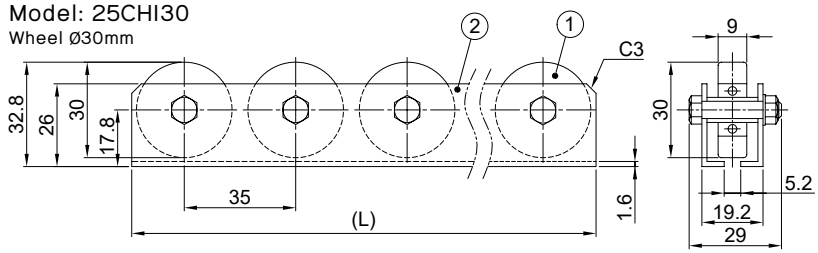

ชิ้นส่วนทดแทน
Replacement Parts



Order Code	Wheel Size
25B6000ZZ	25.4mm
25B6200ZZ	30mm

ชิ้นส่วนทั่วไป
Accessories

Name	Quick Fitting Joint	Adjustable Hoses	Precision Shim Tape	Precision Shim Stock	Shim Rings	C Shims	Socket Head Cap Bolts
Model	21SP_	136_	17R376_	17ST / 17BR	17WST	17RST	24CB
Page	206	206	207	208	209	209	210

Name	Ball Retainers	Stroke End Blocks (hardened)	Stroke End Blocks Sets	Square Stroke End Blocks
Model	25SB-A / 25SB-J	25SBV / 25SBVH / 25SBVM	25SBS / 25SBN / 25SEC	25SBVK
Page	211	212	213	214

Name	Spool Retainers	Spool Retainer Collars	Urethane Washer	Spool Retainers Thick Type	Spool Retainers Large Flange
Model	25SCSR	25SCSRE	25SCSRUR	25SSRH / 25SSRT	25SSRTA / 25SSRTB
Page	214	215	215	216	216

Name	Spool Retainers Counterbore	Blank Holder Stopper Bolt	Round Distant Plate	Round Distant Shim	Square Distant Plate
Model	25SSRZ	25SCBH	25STPM / 25STPY / 25STPME / 25STPYE	25STPMS	25STPK / 25STPB
Page	217	217	218	218	219

Name	Square Distant Shim	Locating Keys	Backup Keys	Washer Die Fastening	Cushion Pins
Model	25STPKS	25SLK	25SUKE	25KWN / 25WSS	25CPR / 25CPM / 25CPH / 25CPL
Page	219	220	220	220	221 - 222

Name	Lifter Cushion Pins	Lifter Cushion Pins Bushing	Plate Lifter Pins	Lifter Plate Stopper
Model	25TCPA / 25TCPB	25STGF / 25STGW	25PLP	25LPE
Page	223	223	224	224

Tel: +662-324-3184-(89) Fax: +662-324-3190 / +662-324-3103
Website: www.sunrisegr.com Email: sale@sunrisegr.com

Quick Fitting Joints - ข้อต่อสวมเร็ว

ORDER EXAMPLE	Model	D	-	Nominal
	21SPC8-02PT			

OIL FREE™

Model: 21SPC
เกลียวตัวผู้
Male Thread



Model	Matching Tube O.D.	Thread Size	
	D	Nominal	R(PT)
21SPC	4	01PT	1/8PT
		02PT	1/4PT
		03PT	3/8PT
	6	01PT	1/8PT
		02PT	1/4PT
		03PT	3/8PT
		04PT	1/2PT
	8	01PT	1/8PT
		02PT	1/4PT
		03PT	3/8PT
		04PT	1/2PT
	10	01PT	1/8PT
		02PT	1/4PT
		03PT	3/8PT
		04PT	1/2PT
	12	02PT	1/4PT
		03PT	3/8PT
		04PT	1/2PT
	16	03PT	3/8PT
		04PT	1/2PT
		06PT	3/4PT

Model: 21SPCF
เกลียวตัวเมีย
Female Thread



Model	Matching Tube O.D.	ThreadSize	
	D	Nominal	R(PT)
21SPCF	4	01PT	1/8PT
		02PT	1/4PT
	6	01PT	1/8PT
		02PT	1/4PT
		03PT	3/8PT
	8	01PT	1/8PT
		02PT	1/4PT
		03PT	3/8PT
		04PT	1/2PT
	10	01PT	1/8PT
		02PT	1/4PT
		03PT	3/8PT
		04PT	1/2PT
	12	02PT	1/4PT
		03PT	3/8PT
		04PT	1/2PT

Model: 21SPLL
เกลียวตัวผู้
Male Thread



Model	Matching Tube O.D.	Thread Size	
	D	Nominal	R(PT)
21SPLL	4	01PT	1/8PT
		02PT	1/4PT
		03PT	3/8PT
	6	01PT	1/8PT
		02PT	1/4PT
		03PT	3/8PT
	8	01PT	1/8PT
		02PT	1/4PT
		03PT	3/8PT
		04PT	1/2PT
	10	01PT	1/8PT
		02PT	1/4PT
		03PT	3/8PT
		04PT	1/2PT
	12	02PT	1/4PT
		03PT	3/8PT
		04PT	1/2PT
	16	03PT	3/8PT
		04PT	1/2PT
		06PT	3/4PT

Model: 21SPLFL
เกลียวตัวเมีย
Female Thread



Code	Matching Tube O.D.	ThreadSize	
	D	Nominal	R(PT)
21SPLFL	4	01PT	1/8PT
		02PT	1/4PT
	6	01PT	1/8PT
		02PT	1/4PT
		03PT	3/8PT
	8	01PT	1/8PT
		02PT	1/4PT
		03PT	3/8PT
		04PT	1/2PT
	10	01PT	1/8PT
		02PT	1/4PT
		03PT	3/8PT
		04PT	1/2PT
	12	02PT	1/4PT
		03PT	3/8PT
		04PT	1/2PT

Adjustable Coolant & Air Hose - ท่อฉีดน้ำหล่อเย็นและลม

JETON

ท่อฉีดสามารถถอดเปลี่ยนแปลงได้ ด้วยชุดประกอบของท่อฉีดน้ำหล่อเย็น
The hose can be customized with adjustable coolant hose packs

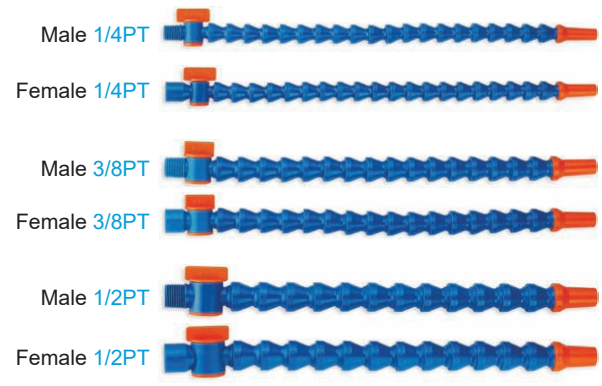

Order Code	Hose System	Hose Length	Thread		Nozzle Head
1362720	1/4	33CM	male	1/4PT	1/4"
1362721	1/4	33CM	female	1/4PT	1/4"
1363720	3/8	36CM	male	3/8PT	3/8"
1363721	3/8	36CM	female	3/8PT	3/8"
1364720	1/2	33CM	male	1/2PT	1/2"
1364721	1/2	33CM	female	1/2PT	1/2"

Precision Shim Tapes - แผ่นชิมแบบกล่อง

Model: 17R376



Shim Tape



Shim Box

Hasberg Shim Tape & Box

ตัวอักษรดำ | Black Text : Carbon Steel (Shim Grade)
ตัวอักษรฟ้า | Blue Text : Stainless Steel (Shim Grade)

Thickness (mm)	Order Code						Tolerance
	Precision Shim Tape					Shim Box (10pc/box)	
	12.7mm x 2m	12.7mm x 5m	25mm x 5m	50mm x 5m	100mm x 5m	50mm x 300mm	
0.005	17R376-G5B						±0.001
0.01	17R376-01B					17R376-01K	±0.002
0.02	17R376-02B			17R376-02G		17R376-02K	
0.03	17R376-03B		17R376-03F	17R376-03G		17R376-03K	
0.04	17R376-04B					17R376-04K	±0.003
0.05	17R376-05B		17R376-05F	17R376-05G	17R376-05H	17R376-05K	
0.06	17R376-06B					17R376-06K	
0.07	17R376-07B					17R376-07K	±0.004
0.08	17R376-08B					17R376-08K	
0.09	17R376-09B					17R376-09K	
0.10	17R376-10B	17R376-10C	17R376-10F	17R376-10G	17R376-10H	17R376-10K	
0.12	17R376-12B						
0.15	17R376-15B						±0.005
0.18	17R376-18B						
0.20	17R376-20B		17R376-20F	17R376-20G	17R376-20H	17R376-20K	±0.006
0.25	17R376-25B						±0.007
0.30	17R376-30B		17R376-30F	17R376-30G	17R376-30H	17R376-30K	
0.35	17R376-35B						±0.008
0.40	17R376-40B			17R376-40G	17R376-40H	17R376-40K	±0.009
0.45	17R376-45B						
0.50	17R376-50B	17R376-50C	17R376-50F	17R376-50G	17R376-50H	17R376-50K	±0.01
0.60	17R376-60B					17R376-60K	
0.70	17R376-70B					17R376-70K	±0.012
0.80	17R376-80B					17R376-80K	
0.90	17R376-90B					17R376-90K	±0.013
1.00	17R376-A0B				17R376-A0H	17R376-A0K	

Precision Shim Stock - แผ่นชิมแบบแผ่น



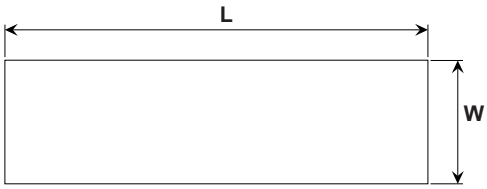

SRT

ORDER EXAMPLE: Model | Thickness x W x L — 17ST0.05x300x2M

Model: 17ST (M) สเตนเลสสตีล เกรดแผ่นชิม Stainless Steel (Shim Grade)

Thickness (mm)	W (mm)	L (M)	
0.01	100	1M	2M
0.02	150	1M	
	300	1M	2M
0.03	150	1M	
	300	1M	2M
0.04	150	1M	
	300	1M	2M
0.05	150 , 300	1M	2M
0.06	300	1M	2M
0.07	300	1M	2M
0.08	300	1M	2M
0.09	300	1M	2M
0.10	150 , 300	1M	2M
0.20	150 , 300	1M	2M
0.25	280	1M	2M
0.30	150 , 300	1M	2M
0.40	150 , 300	1M	2M
0.50	150 , 300	1M	2M
0.60	150	1M	
0.80	150	1M	
	300	1M	2M
1.00	150 , 300	1M	2M
1.20	150	1M	
1.50	150	1M	
2.00	150 , 300	1M	2M
3.00	150	1M	
4.00	150	1M	
5.00	150	1M	

Model: 17BR (M) ทองเหลือง เกรดแผ่นชิม Brass (Shim Grade)

Thickness mm)	W (mm)	L (M)	
0.05	150 , 300	1M	2M
0.10	150 , 300	1M	2M
0.20	150 , 300	1M	2M
0.30	150 , 300	1M	2M
0.40	150 , 300	1M	2M
0.50	150 , 300	1M	2M
0.80	150	1.2M	
1.00	150	1M	

Customizable!

แผ่นชิมสามารถตัดตามแบบได้ เพียงส่งแบบมาให้เรา

Shims can be cut to your drawing

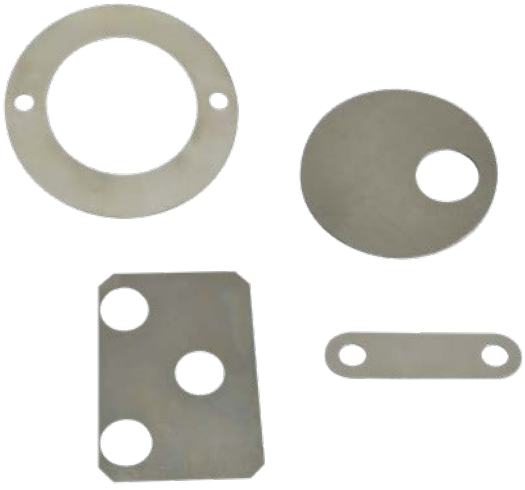

ชิ้นส่วนทั่วไป

Shim Rings - แผ่นชิมแหวน

SRT

Model: 17WST



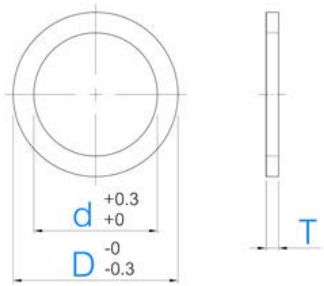

ORDER EXAMPLE | Model | d x D x T | 17WST10x15x0.10

สเตนเลสสตีล เกรดแผ่นชิม
Stainless Steel (Shim Grade)

ขนาดบรรจุ 10ชิ้น/แพ็ก
Sold in pack of 10 pieces

Model	d	D																						T
17WST	2	4	5	6																				0.05 0.10 0.20 0.30 0.40 0.50 1.00 2.00
	3		5	6	7	8	9	10																
	4			6	7	8	9	10	12	13														
	5				7	8	9	10	12	13	14	15	16											
	6					8	9	10	12	13	14	15	16	18										
	8							10	12	13	14	15	16	18	20									
	10								12	13	14	15	16	18	20									
	12											15	16	18	20	21	22							
	15													18	20	21	22	24						
	16														20	21	22	24	28					
	17														20	21	22	24	28	30	32			
	20																	24	28	30	32	35	40	
	22																		28	30	32	35	40	
	25																			30	32	35	40	42
	28																				32	35	40	42	45
	30																					35	40	42	45	50
	35																							42	45	50	55
	40																								45	50	55
	45																									50	55

C Shims - แผ่นชิมรูปตัวซี

SRT

Model: 17RST



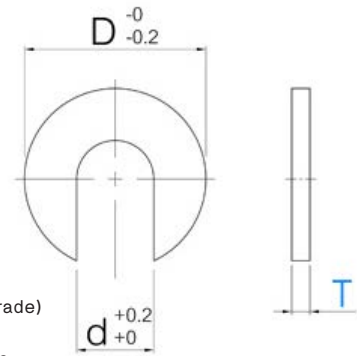

สเตนเลสสตีล เกรดแผ่นชิม
Stainless Steel (Shim Grade)

ขนาดบรรจุ 10ชิ้น/แพ็ก
Sold in pack of 10 pieces

ORDER EXAMPLE | Model | No x D | 17RST10x0.10

Order Code	No.	T	d	D
17RST	6	0.05 0.10 0.20 0.30 0.40 0.50 1.00 2.00	6.5	12
	8		8.5	15
	10		10.5	20
	12		13	25
	16		17	30
	20		21	35
	24		25	40
	30		31	50

Accessories

SUN RISE technologies
Tel: +662-324-3184-(89) Fax: +662-324-3190 / +662-324-3103
Website: www.sunrisegr.com Email: sale@sunrisegr.com

Socket Head Cap Bolts - สกรูหัวจมหกเหลี่ยมรมดำ

Model: 24CB

SUN RISE TECHBOLT



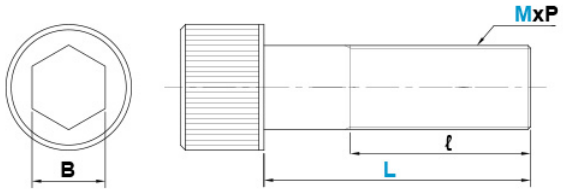

ORDER EXAMPLE: Model M x L — 24CB10x150

12.9 Grade, SCM435
38 ~ 43HRC, Blacken Treatment

Standard:
DIN 912 / ISO 4762
ANSI 18.3.1M / JIS B 1176

M	L																		MxP	B	Max l
1.6	4	6	8	10	12														M1.6x0.35	1.5	12
2	4	6	8	10	12	16	20	25											M2.0x0.40	1.5	16
2.5	4	6	8	10	12	16	20	25											M2.5x0.45	2	17
3	4	6	8	10	12	16	20	25	30	35	40	45	50						M3.0x0.50	2.5	18
4	4	6	8	10	12	16	20	25	30	35	40	45	50	55	60	65	70	75	M4.0x0.70	3	20
	80	90	100	110																	
5	4	6	8	10	12	16	20	25	30	35	40	45	50	55	60	65	70	75	M5.0x0.80	4	22
	80	90	100	110	120	130	140	150													
6	4	6	8	10	12	16	20	25	30	35	40	45	50	55	60	65	70	75	M6.0x1.00	5	24
	80	90	100	110	120	130	140	150													
8	10	12	16	20	25	30	35	40	45	50	55	60	65	70	75	80	90	100	M8.0x1.25	6	28
	110	120	130	140	150	160	180	200	230	250	280	300									
10	16	20	25	30	35	40	45	50	55	60	65	70	75	80	90	100	110	120	M10x1.50	8	32
	130	140	150	160	170	180	190	200	230	250	280	300									
12	16	20	25	30	35	40	45	50	55	60	65	70	75	80	90	100	110	120	M12x1.75	10	36
	130	140	150	160	170	180	190	200	210	220	230	240	250	280	300						
14	25	30	35	40	45	50	55	60	65	70	75	80	90	100	110	120	130	140	M14x2.00	12	40
	150	160	170	180	190	200	230	250													
16	25	30	35	40	45	50	55	60	65	70	75	80	90	100	110	120	130	140	M16x2.00	14	44
	150	160	170	180	190	200	210	220	230	240	250	280	300	320	340	360	380	400			
18	40	45	50	55	60	65	70	75	80	90	100	110	120	130	140	150	160	170	M18x2.50	14	48
	180	190	200	230	250	280	300	320	340	360	380	400									
20	40	45	50	55	60	65	70	75	80	90	100	110	120	130	140	150	160	170	M20x2.50	17	52
	180	190	200	210	220	230	240	250	280	300	320	340	360	380	400						
22	50	55	60	65	70	75	80	90	100	110	120	130	140	150	180	200	180	230	M22x2.50	17	56
	250	280	300	320	340	360	380	400	320	340	360	380	400								
24	50	55	60	65	70	75	80	90	100	110	120	130	140	150	160	170	180	190	M24x3.00	19	60
	200	210	220	230	240	250	280	300	320	340	360	380	400								
27	50	55	60	65	70	75	80	90	100	110	120	130	140	150	160	170	180	190	M27x3.00	19	66
	200	210	220	230	240	250	280	300	320	340	360	380	400								
30	50	60	70	80	90	100	110	120	130	140	150	160	170	180	190	200	230	250	M30x3.50	22	72
	280	300	320	340	360	380	400														
33	80	90	100	110	120	130	140	150	160	170	180	190	200	210	220	230	240	250	M33x3.50	22	84
	280	300	320	340	360	380	400														
36	80	90	100	110	120	130	140	150	160	170	180	190	200	210	220	230	240	250	M36x4.00	27	96
	280	300	320	340	360	380	400														

Ball Retainers - ปลอกลูกปืน

OIL FREE™



Model:
25SB-A
(Aluminum)



Model:
25SB-J
(Resin, POM)

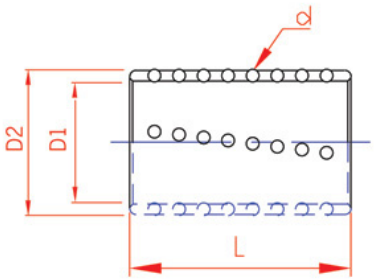

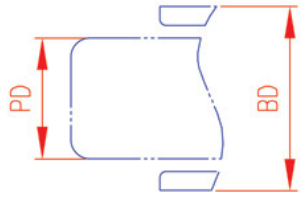

ORDER EXAMPLE: Model PD- L — 25SB-A25-50

Ⓜ 25SB-A : Aluminum Body
25SB-J : Resin (POM) Body
Ball : SUJ2 (62~67HRC)
Ball Spericity : 0.25μm

Model	PD (Post Diameter)	L	D1	D2	d	Number of Balls
25SB-A (Aluminum) 25SB-J (Resin)	19	60	19.4	24.4	3	120
	20	50	20.4	25.4		96
		60				120
	22	50	22.4	27.4		112
		60				140
	25	50	25.4	30.4		128
		60				160
		75				208
	28	75	28.4	35.4	4	154
	30	60	30.4	37.4		112
		75				154
		90				208
	32	60	32.4	39.4		176
		90				208
	36	80	36.4	43.4		176
		90				208
	38	70	38.4	47.4	5	128
		90				176
	40	90	40.4	49.4		176
	45	90	45.4	54.4		198
		110				234
	50	90	50.4	59.4		220
		110				260
	60	90	60.4	69.4		242
		100				264
		110				286

SUN RISE technologies
Tel: +662-324-3184-(89) Fax: +662-324-3190 / +662-324-3103
Website: www.sunrisegr.com Email: sale@sunrisegr.com

Stroke End Blocks (Harden) - สโตรคเอ็นบล็อค (ชุบแข็ง)

OF OIL FREE™



R (สีแดง) Y (สีเหลือง) N (สีดำ)

② 

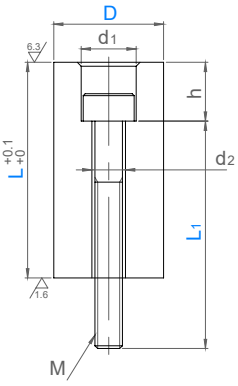

Model: 25SBV

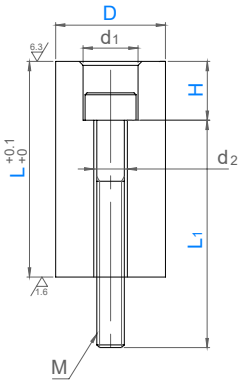

Model: 25SBVH
ปรับค่า H ได้
H configurable

ORDER EXAMPLE: Model - D - L - H - Color - L1
25SBVH38-80.5-40-Y-60

① (M) SUJ2 54-58HRC
② Socket Head Cap Bolt

Model	D	L 0.1mm increment	Color	L1 5mm increment	h	MxP	d1	d2
25SBV	10	10.0 - 40.0	R (Red) Y (Yellow) N (Normal)	10 - 40	5	M3 x 0.5	6	4
	12							
	14	15.0 - 50.0		10 - 50	8	M4 x 0.7	8	5
	16							
	18	20.0 - 70.0		15 - 70	10	M5 x 0.8	9.5	6
	20	20.0 - 80.0		15 - 85	13	M6 x 1.0	11	7
	25	22.0 - 100.0		15 - 100	15	M8 x 1.25	14	9
	32	22.0 - 120.0		15 - 120				
	38	25.0 - 120.0		20 - 120	18	M10 x 1.5	17	11
	50							
	60	30.0 - 150.0		25 - 150	21	M12 x 1.75	20	13

Model	D	L 0.1mm increment	H 1mm increment	Color	L1 5mm increment	MxP	d1	d2
25SBVH	20	15.0 - 100.0	10 - 40	R (Red) Y (Yellow)	15 - 85	M6 x 1.0	11	7
	25	15.0 - 120.0			15 - 120	M8 x 1.25	14	9
	32							
	38	25.0 - 120.0	15 - 40	N (Normal)	20 - 120	M10 x 1.5	17	11
	50							

Stroke End Blocks (Harden & Tapped) - สโตรคเอ็นบล็อค (ชุบแข็ง และมีรูเกลียว)

OF OIL FREE™



R (สีแดง) Y (สีเหลือง) N (สีดำ)

Model: 25SBVM

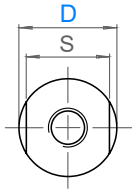

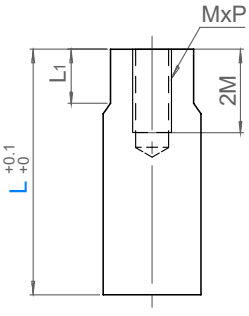

ORDER EXAMPLE: Model - D - L - Color
25SBVM20-50.1-Y

(M) SUJ2 54-58HRC

Model	D	L 0.1mm increment	Color	L1	MxP	S
25SBVM	20	20.0 - 80.0	R (Red)	12	M6 x 1.0	17
	25	22.0 - 90.0	Y (Yellow)		M8 x 1.25	22
	32	22.0 - 100.0		16		27
	38	25.0 - 100.0	N (Normal)		M10 x 1.5	32

Stroke End Block Sets - ชุดสโตรคเอ็นบล็อค

OF OIL FREE™

Model: 25SBS



R (สีแดง) Y (สีเหลือง) N (สีดำ)

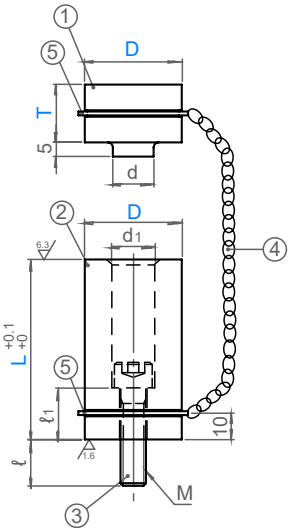

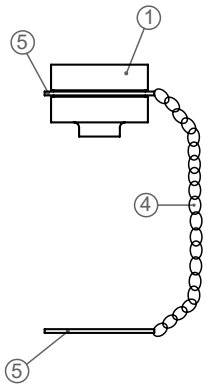

Model	①	②	③	④	⑤
25SBS	✓	✓	✓	✓	✓
25SBN		✓	✓		
25SEC	✓			✓	✓

①② Ⓜ SS400
③ Socket Head Cap Bolt
④ Chain
⑤ Washer JIS B 2804



ORDER EXAMPLE: Model | D - L - Color (2) - T - Color (1) | 25SBS20-90.5-R-25-Y

Model	D	L 0.1mm increment	Color (2)	T 5mm increment	Color (1)	MxP	d	d1	ℓ	ℓ1
25SBS 25SBN 25SEC	14	22.0 - 80.0	R (Red) Y (Yellow) N (Normal)	10 - 50	R (Red) Y (Yellow) N (Normal)	M4 x 0.7	7	8	10	10
		80.1 - 100.0								35
	16	22.0 - 80.0				M4 x 0.7	7	8	10	10
		80.1 - 100.0								35
	18	22.0 - 80.0				M5 x 0.8	8.5	9.5	10	10
		80.1 - 100.0								35
	20	22.0 - 80.0				M6 x 1.0	10	11	11	9
		80.1 - 100.0								34
		100.1 - 120.0								54
	25	22.0 - 80.0				M8 x 1.25	13	14	12	8
		80.1 - 100.0							14	31
		100.1 - 120.0								51
		120.1 - 170.0								76
	32	22.0 - 80.0				M8 x 1.25	13	14	12	8
		80.1 - 100.0							14	31
		100.1 - 120.0								51
		120.1 - 170.0								76
	38	25.0 - 80.0				M10 x 1.5	16	17	16	9
		80.1 - 100.0							17	33
		100.1 - 120.0								53
		120.1 - 200.0								83
	50	25.0 - 80.0		10 - 100		M12 x 1.75	18	20	18	7
		80.1 - 100.0							20	30
		100.1 - 120.0								50
		120.1 - 200.0								80
	60	25.0 - 80.0				M12 x 1.75	18	20	18	7
		80.1 - 100.0							20	30
		100.1 - 120.0								50
		120.1 - 200.0								80

SUN RISE technologies
Tel: +662-324-3184-(89) Fax: +662-324-3190 / +662-324-3103
Website: www.sunrisegr.com Email: sale@sunrisegr.com

Square Stroke End Blocks - สโตรคเอ็นบล็อคสีเหลี่ยม

OIL FREE™

Model: 25SBVK

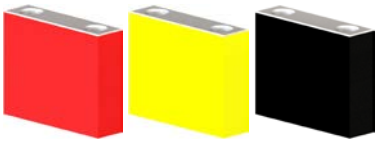

R (สีแดง) Y (สีเหลือง) N (สีดำ)

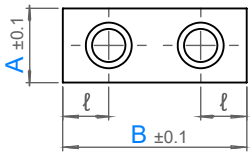

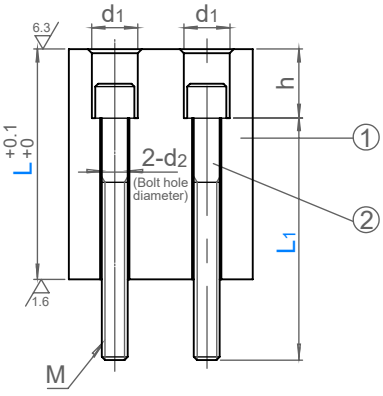

② 

ORDER EXAMPLE: Model | A - B - L - Color - L1 | 25SBVK16-38-50.5-Y-55

① Ⓜ SKS93 54-58HRC
② Socket Head Cap Bolt

Model	A	B	Body L 0.1mm increment	Body Color	Bolt L1 5mm increment	MxP	ℓ	D1	D2	h
25SBVK	13	32	20.0 - 50.0	R (red)	15 - 50	M4x0.7	8	8	5	13
		50					12			
	16	38	20.0 - 80.0	Y (yellow)	15 - 80	M5x0.8	10	9.5	6	13
		65					14			
	19	50	20.0 - 100.0	N (black)	15 - 100	M6x1.0	12	11	7	13
		75					16			

Spool Retainers - สปูลรีเทนเนอร์

OIL FREE™

Model: 25SCSR



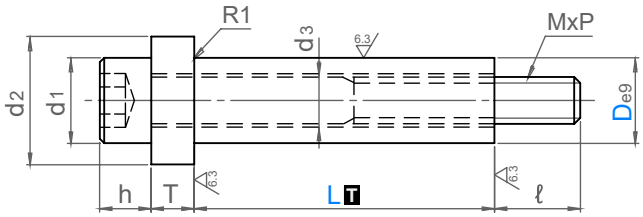

① Ⓜ Socket Head Cap Bolt

ORDER EXAMPLE: Model | D - L | 25SCSR20-80

② Ⓜ Retainer: S45C 38-43HRC Blacken

Model	D e9		L 5mm increment	L 10mm increment	d1	d2	d3	MxP	h	T	ℓ
25SCSR	10	-0.025 -0.061	10 - 85	90 - 100	10	15	6.3	M6x1.0	6	5	10
	13	-0.032 -0.075	15 - 85	90 - 120	13	18	8.4	M8x1.25	8	5	15
	16		20 - 85	90 - 180	16	24	10.6	M10x1.5	10	8	22
	20	-0.040 -0.092	30 - 85	90 - 180	18	28	12.6	M12x1.75	12	10	20
	25		40 - 85	90 - 200	24	36	16.8	M16x2.0	16	13	27
	32	-0.050 -0.112	-	60 - 200	30	45	20.8	M20x2.5	20	16	34

Spool Retainer Collars - เสื้อสปูลรีเทนเนอร์

OIL FREE™



Model: 25SCSRE

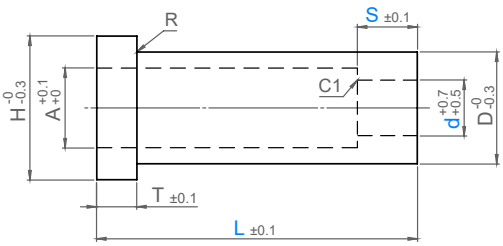

ORDER EXAMPLE Model d - L - S
25SCSRE20-80-20

(M) SS400 Blackening

Model	d	L 10mm increment	S 5mm increment	H	T	A	D	R	Use with 25SCSR D
25SCSRE	10	50 - 100	10 - 25	36	5	16	28	1	10
	13			40	5	19	30		13
	16			46	8	25	36		16
	20			55	10	29	44		20
	25	60 - 100	10 - 25	60	13	37	50	1	25
	32			70	16	46	60	1.5	32

Spool Retainer Urethane Washer - ยูรีเทนวอชเชอร์สำหรับสปูลรีเทนเนอร์

OIL FREE™



Model: 25SCSRUR

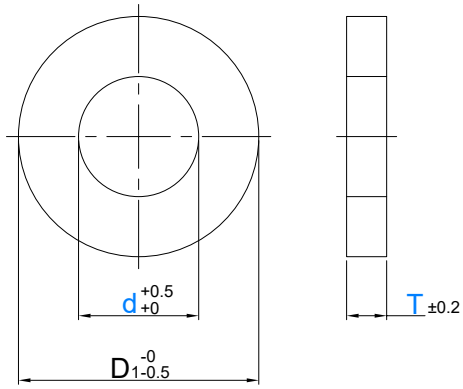

ORDER EXAMPLE Model d - T
25SCSRUR20-10

(M) Urethane (Shore A90)

Model	d	T			D1	Use with 25SCSR D
25SCSRUR	16	5	10	-	24	16
	20				28	20
	25				36	25
	32	-	10	15	45	32

SUN RISE technologies
Tel: +662-324-3184-(89) Fax: +662-324-3190 / +662-324-3103
Website: www.sunrisegr.com Email: sale@sunrisegr.com

Spool Retainers Thick Type - สปูลรีเทนเนอร์ แบบหนา

OIL FREE™



Model: 25SSRH

Model: 25SSRT
สกรูทากาวกันคลาย
Adhesive on bolt (Tech Bolt)



① Ⓜ Socket Head Cap Bolt
SCM435
Hardness 12.9 (M10~20)
10.9 (M24)

② Ⓜ S45C
25~30HRC
Blackening

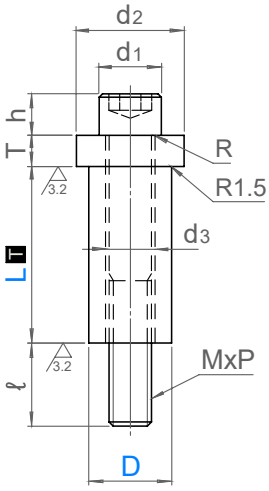

ORDER EXAMPLE Model D - L
25SSRH22-70

Model	D e9		L 10mm increment	d1	d2	d3	MxP	R	h	T	ℓ
25SSRH 25SSRT	18	-0.032 -0.075	60 - 150	16	27	10.7	M10x1.5	1	10	8	22
	22	-0.040 -0.092	60 - 150	18	33	12.7	M12x1.75	1	12	10	20
	30		60 - 180	24	44	16.7	M16x2.0	1.5	16	13	27
	36	-0.050 -0.112	80 - 180	30	53	20.7	M20x2.5	1.5	20	16	34
	44		80 - 180	36	64	24.7	M24x3.0	1.5	24	18	42

Spool Retainers Large Flange - สปูลรีเทนเนอร์ บ่าขนาดใหญ่

OIL FREE™



Model: 25SSRTA

Model: 25SSRTB
สกรูทากาวกันคลาย
Adhesive on bolt (Tech Bolt)



① Ⓜ Socket Head Cap Bolt
SCM435
Hardness 12.9 (M10~20)
10.9 (M24)

② Ⓜ S45C
25~30HRC
Blackening

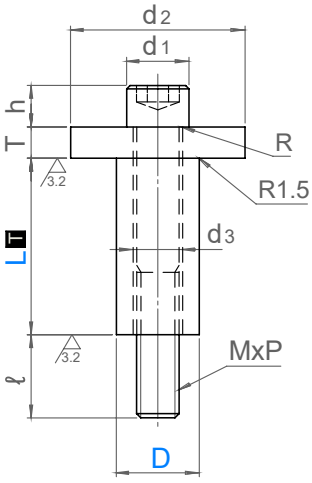

ORDER EXAMPLE Model D - L
25SSRTA30-90

Model	D e9		L 10mm increment	d1	d2	d3	MxP	R	h	T	ℓ
25SSRTA 25SSRTB	22	-0.040 -0.092	80 - 130	18	50	12.7	M12x1.75	1	12	10	20
	30		80 - 130	24	60	16.7	M16x2.0	1.5	16	13	27
	36	-0.050 -0.112	100 - 150	30	70	20.7	M20x2.5	1.5	20	16	34
	44		100 - 150	36	80	24.7	M24x3.0	1.5	24	18	42

Spool Retainers (Counterbore) - สปูลรีเทนเนอร์

OIL FREE™



Model: 25SSRZ



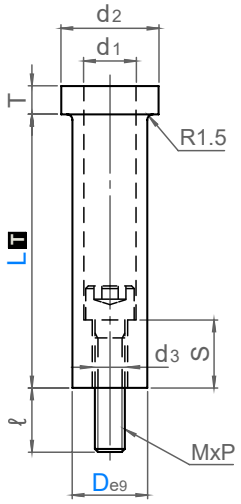

① Ⓜ Socket Head Cap Bolt
SCM435
Hardmess 12.9 (M10~20)
10.9 (M24)

② Ⓜ S45C
25~30HRC
Blackening

ORDER EXAMPLE: Model D - L → 25SSRZ28-70

Model	D e9		L 10mm increment	d1	d2	d3	MxP	Bolt Length	T	S	ℓ
25SSRZ	20	-0.040 -0.092	40 - 90	15	26	9	M8x1.25	35	6	20	15
	24		50 - 100	18	33	11	M10x1.5	45	6	25	20
	28		50 - 110	20	37	13	M12x1.75	50	8	30	20
	35	-0.050 -0.112	60 - 130	26	47	17	M16x2.0	60	8	35	25
	44		70 - 130	32	57	21	M20x2.5	70	8	40	30

Blank Holder Stopper Bolts - แบลงค์โฮลเดอร์สต๊อปเปอร์โบลท์

OIL FREE™



Model: 25SCBH





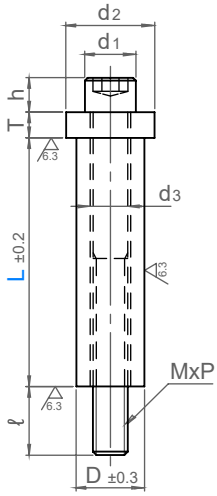

① Ⓜ Socket Head Cap Bolt
SCM435
Hardness 12.9

②③ Ⓜ S45C
Blackening

ORDER EXAMPLE: Model No - L → 25SCBH32-110

Model	No.	L 10mm increment	L 20mm increment	D	d1	d2	d3	h	T	MxP	ℓ
25SCBH	25	100 - 250	260 - 300	25.4	24	36	17.4	16	13	M16x2.0	27
	32	100 - 250	260 - 300	31.8	30	45	21.8	20	16	M20x2.5	34

Tel: +662-324-3184-(89) Fax: +662-324-3190 / +662-324-3103
Website: www.sunrisegr.com Email: sale@sunrisegr.com

Round Distance Plate - เพลทกั้นระยะ กลม

OIL FREE™

ORDER EXAMPLE: Model | D - T - Color → 25STPM55-30-R

Ⓜ S45C

Model: 25STPM / 25STPME / 25STPY / 25STPYE

Induction hardened part

Not hardened

-One hole type-
D=45•55•65•90



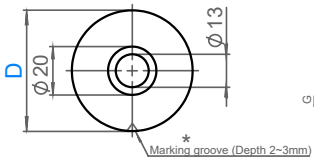

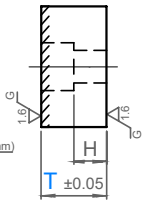

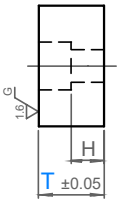

-Two hole type-
D=65•80•90



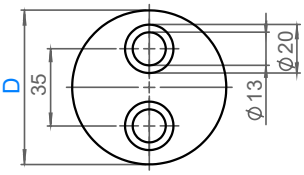

* A marking groove is not provided for D45,55.

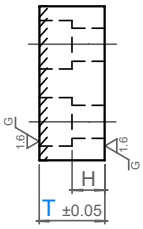

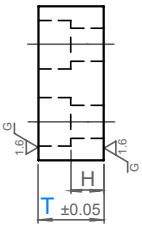

Model	D	T	Color	H	No. Bolt Hole
25STPM 25STPY	45	20	R (Red) Y (Yellow) N (No Color)	6	1
		30		15	
		40			
	55	20		6	
		30		15	
		40			
	65	30		15	2
		40			
		50			
		100			
	80	30		15	
		40			
		50			
	90	30		15	
		40			
		50			
25STPME 25SPTYE	65	30		15	1
		50			
	90	30		15	
		50			

Round Distance Plate Shim - ชิม สำหรับเพลทกั้นระยะ กลม

OIL FREE™

ORDER EXAMPLE: Model | D - T → 25STPMS55-0.30

Ⓜ Stainless Steel (Shim Grade)

Model: 25STPMS

D = 45 • 55



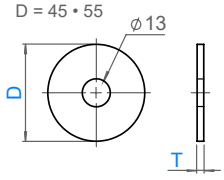

D = 65 • 90

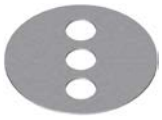

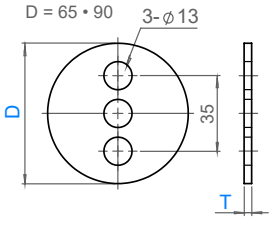

D = 80



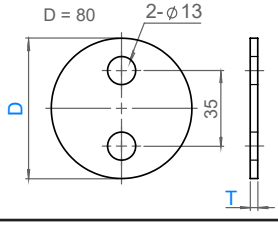

Model	D	T	
25STPMS	45	0.05	±0.004
		0.10	±0.005
		0.20	±0.006
		0.30	±0.007
		0.40	±0.009
		0.50	±0.010
		1.00	±0.020
	55	0.05	±0.004
		0.10	±0.005
		0.20	±0.006
		0.30	±0.007
		0.40	±0.009
		0.50	±0.010
		1.00	±0.020
	65	0.05	±0.004
		0.10	±0.005
		0.20	±0.006
		0.30	±0.007
		0.40	±0.009
		0.50	±0.010
		1.00	±0.020

Model	D	T	
25STPMS	80	0.05	±0.004
		0.10	±0.005
		0.20	±0.006
		0.30	±0.007
		0.40	±0.009
		0.50	±0.010
		1.00	±0.020
	90	0.05	±0.004
		0.10	±0.005
		0.20	±0.006
		0.30	±0.007
		0.40	±0.009
		0.50	±0.010
		1.00	±0.020

Square Distance Plate - เพลทกั้นระยะ สีเหลี่ยม



Model: 25STPK
Induction hardened part

25STPB
Not hardened

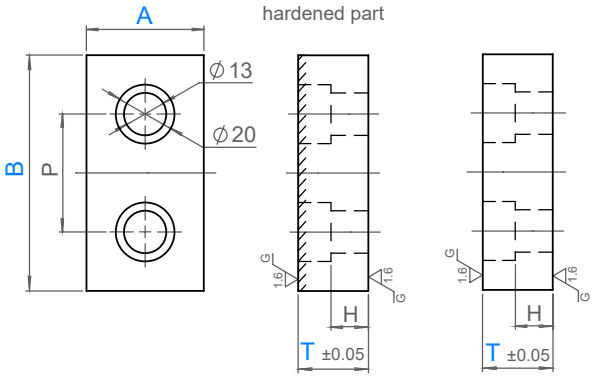

M S45C

OF OIL FREE™

ORDER EXAMPLE: Model A - B - T - Color
25STPK50-60-30-R

Model	A	B	T	Color	H	P
25STPK 25STPB	38	60	20	R (Red) Y (Yellow) N (No Color)	6	30
			30		15	
			40			
		80	20		6	55
			30		15	
			40			
	50	60	20		6	30
			30		15	
			40			
		80	20		6	55
			30		15	
			40			
	60	80	20		6	55
			30		15	
			40			
		100	20		6	70
			30		15	
			40			
	80	100	20		6	70
			30		15	
			40			
		120	20		6	85
			30		15	
			40			

Square Distance Plate Shim - ชิม สำหรับเพลทกั้นระยะ สีเหลี่ยม

Model: 25STPKS



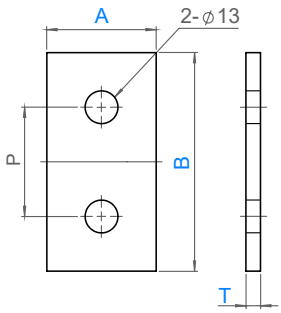

ORDER EXAMPLE: Model A - B - T
25STPKS38-80-0.30

M Stainless Steel (Shim Grade)

OF OIL FREE™

Model	A	B	T		P
25STPKS	38	60	0.05	±0.004	30
			0.10	±0.005	
			0.20	±0.006	
			0.30	±0.007	
			0.50	±0.010	
			1.00	±0.020	
		80	0.05	±0.004	55
			0.10	±0.005	
			0.20	±0.006	
			0.30	±0.007	
			0.50	±0.010	
			1.00	±0.020	
	50	60	0.05	±0.004	30
			0.10	±0.005	
			0.20	±0.006	
			0.30	±0.007	
			0.50	±0.010	
			1.00	±0.020	
		80	0.05	±0.004	55
			0.10	±0.005	
			0.20	±0.006	
			0.30	±0.007	
			0.50	±0.010	
			1.00	±0.020	

Model	A	B	T		P
25STPKS	60	80	0.05	±0.004	55
			0.10	±0.005	
			0.20	±0.006	
			0.30	±0.007	
			0.50	±0.010	
			1.00	±0.020	
		100	0.05	±0.004	70
			0.10	±0.005	
			0.20	±0.006	
			0.30	±0.007	
			0.50	±0.010	
			1.00	±0.020	
	80	100	0.05	±0.004	70
			0.10	±0.005	
			0.20	±0.006	
			0.30	±0.007	
			0.50	±0.010	
			1.00	±0.020	
		120	0.05	±0.004	85
			0.10	±0.005	
			0.20	±0.006	
			0.30	±0.007	
			0.50	±0.010	
			1.00	±0.020	

SUN RISE technologies
Tel: +662-324-3184-(89) Fax: +662-324-3190 / +662-324-3103
Website: www.sunrisegr.com Email: sale@sunrisegr.com

Locating Keys - โลเคทติ้งคีย์



Model: 25SLK

OIL FREE™

ORDER EXAMPLE: Model A - L → 25SLK25-100 (M) S45C

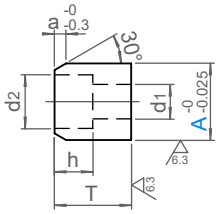

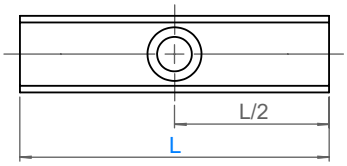

Model	A	L	T	d1	d2	h	a
25SLK	20	60	20	9	14	10	3
		80					
	25	60	25	11	18	12	4
		80					
		100					
	28	60	25	11	18	12	4
		80					
		100					
	32	60	25	11	18	12	5
		80					
		100					

Backup Keys - แบ็คอัพคีย์



Model: 25SUKE

OIL FREE™

ORDER EXAMPLE: Model A - L → 25SUKE25-150 (M) SS400

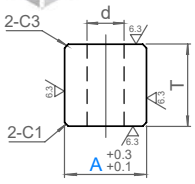

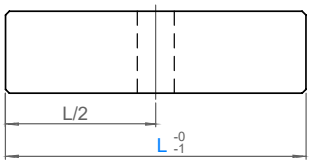

Model	A	L	T	d
25SUKE	20	120	20	11
	25	150	25	13
	30	100	25	13
		125		
		150		

Washers for Die Fastening & Oblong Hole - วอชเชอร์สำหรับดาย และ รูคีย์

OIL FREE™

Model: 25KWN

ORDER EXAMPLE: Model D - A - T → 25KWN60-26-10 (M) S45C 25-30HRC Blackening



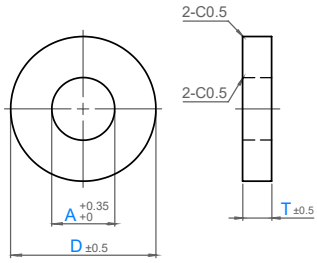

Model	D	A	T
25KWN	50	22	10
			15
	60	26	10
			15
	70	26	10
			15
	80	26	10
			15
		30	15

Model: 25WSS

ORDER EXAMPLE: Model No → 25WSS10 (M) S45C 23-30HRC



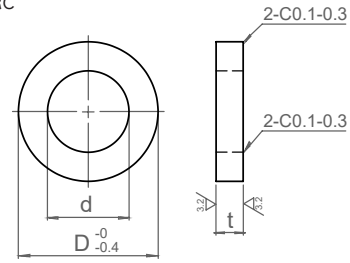

Model	No.	D	d		t	
25WSS	6	12.5	6.4	+0.25 0	2.5	±0.25
	8	17	8.4		2.5	
	10	21	10.5	+0.3 0	3	±0.3
	12	24	13		4	±0.4
	16	30	17		5	±0.5
	20	37	21		5	

Accessories

Cushion Pins Male Thread Type - คุชชั่นพิน แบบมีเกลียวตัวผู้

OIL FREE™



Model: 25CPR

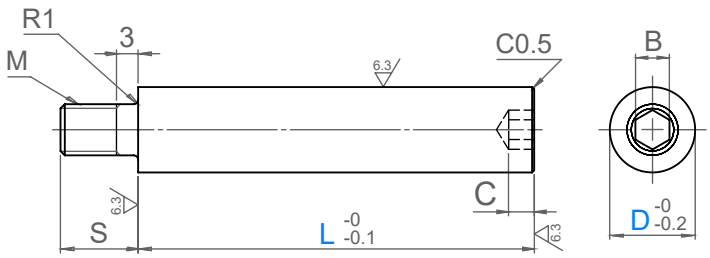

ORDER EXAMPLE: Model D - L → 25CPR20-100

Ⓜ S45C 50HRC~ Induction Harden

Model	D	L 10mm increments	MxP	S	B	C
25CPR	16	50 - 200	M10x1.5	15	8	5
	20	50 - 250	M12x1.75	18	10	6
	25	50 - 250	M16x2.0	24	14	9
	32	50 - 250	M20x2.5	30	17	12



Model: 25CPM

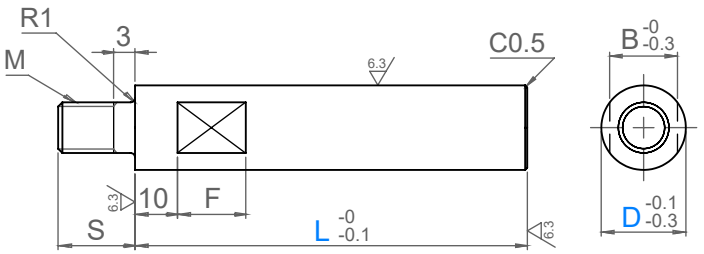

ORDER EXAMPLE: Model D - L → 25CPM20-100

Ⓜ S45C 50HRC~ Induction Harden

Model	D	L 10mm increments	MxP	S	B	F
25CPM	16	50 - 250	M10x1.5	12	13	16
	20	50 - 250	M12x1.75	15	16	16
	25	50 - 250	M16x2.0	18	18	16
	32	50 - 250	M20x2.5	24	21	16

Tel: +662-324-3184-(89) Fax: +662-324-3190 / +662-324-3103
Website: www.sunrisegr.com Email: sale@sunrisegr.com

Cushion Pins Head Type - คุชชั่นพินมีบ่า

OF OIL FREE™



Model: 25CPH

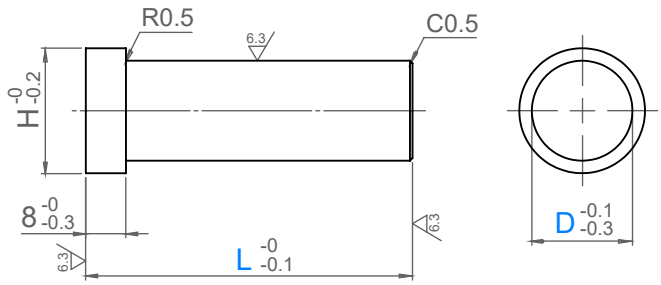

ORDER EXAMPLE: Model D - L → 25CPH20-100

(M) S45C 50HRC~ Induction Harden

Model	D	L 10mm increments	H
25CPH	10	50 - 200	15
	13	50 - 250	18
	16	50 - 250	21
	20	50 - 250	25
	25	50 - 250	30
	32	50 - 250	37



Model: 25CPL

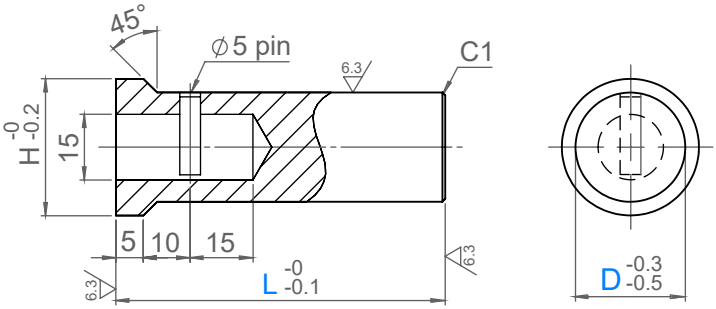

ORDER EXAMPLE: Model D - L → 25CPL32-120

(M) S45C 50HRC~ Induction Harden

Model	D	L 20mm increments	H
25CPL	25	80 - 240	30
	32	100 - 240	40
	38	100 - 280	45
	50	160 - 300	60

ชิ้นส่วนทั่วไป

Lifter Cushion Pins - ลิฟเตอร์คุชชั่นพิน

OIL FREE™

Model: 25TCPA



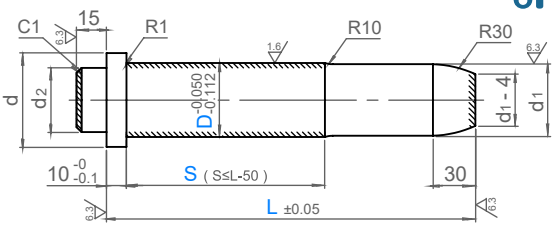

Model: 25TCPB



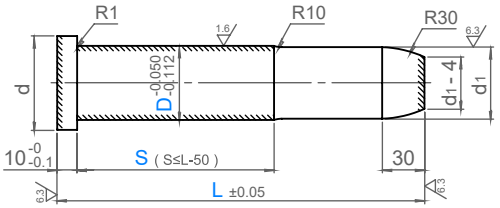

ORDER EXAMPLE: Model D - L - S → 25TCPA30-180-100

Ⓜ S45C 50HRC-

Induction Harden Area

Model	D	L 5mm increments	S 5mm increments	d	d1	d2
25TCPA 25TCPB	30	100 - 160	50 - 110	38	29	26
		165 - 240	50 - 190			
		245 - 275	50 - 225			
	40	100 - 160	50 - 110	48	39	36
		165 - 280	50 - 230			
		285 - 360	50 - 310			
		365 - 460	50 - 410			
	50	160 - 220	50 - 170	58	49	46
		225 - 300	50 - 250			
		305 - 410	50 - 360			
		415 - 460	50 - 410			

Lifter Cushion Pin Bushings - บุช สำหรับ ลิฟเตอร์คุชชั่นพิน

OIL FREE™



Model: 25STGF



Model: 25STGW

25STGF Ⓜ FC250 Oil Free™ Solid Lubricant

25STGW Ⓜ Copper Alloy Oil Free™ Solid Lubricant

ORDER EXAMPLE: Model D → 25STGF50

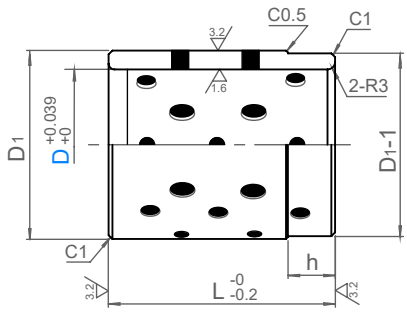

Model	D	D1		h	L
25STGF 25STGW	30	50	±0.008	10	60
	40	60	±0.0095	15	80
	50	70		15	100

Accessories

SUN RISE technologies
Tel: +662-324-3184-(89) Fax: +662-324-3190 / +662-324-3103
Website: www.sunrisegr.com Email: sale@sunrisegr.com

Plate Lifter Pins - เพลทลิฟเตอร์พิน

OIL FREE™

Model: 25PLP



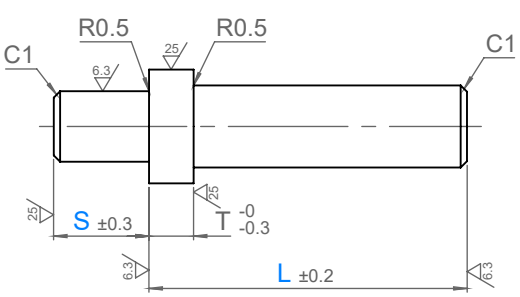

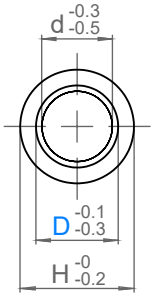

ORDER EXAMPLE: Model D - L → 25PLP32-120

Ⓜ S45C 50HRC~ Induction Harden

Model	D	L 10mm increments	S 1mm increments	d	T	H
25PLP	13	100 - 250	10 - 20	10	8	18
	16	100 - 300	10 - 20	13	8	21
	20	100 - 400	15 - 30	16	8	25
	25	100 - 500	15 - 40	20	8	30
	32	100 - 500	15 - 50	25	8	40

Lifter Plate Stopper - ลิฟเตอร์เพลทสต๊อปเปอร์

OIL FREE™



Model: 25LPE

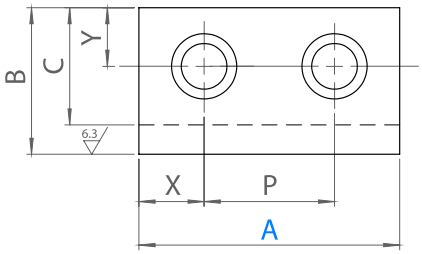

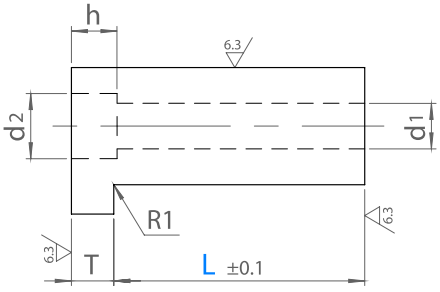

ORDER EXAMPLE: Model A - L → 25LPE80-100

Ⓜ S45C

Model	A	L 1mm increments	B	T	C	X	Y	P	d1	d2	h
25LPE	60	40 - 80	38	10	30	15	15	30	11	18	12
	80	50 - 100	45	13	36	20	18	40	14	20	14
	100	60 - 100	60	15	50	25	25	50	18	26	18

สไลด์เพลท
SLIDE PLATES

			
Name	Copper Alloy Wear Plate (20mm)	Copper Alloy Wear Plate (10mm)	Copper Alloy Wear Plate (5mm)
Model	25SWW / 25SWWD	25STWW / 25STWWD	25UTWW
Page	227	228	229

			
Name	Copper Alloy Wear Plate (Compact)	Cast Iron Wear Plate (20mm)	Steel Wear Plate (20mm)
Model	25MSTS	25SWF / 25SWFD	25SWI
Page	230	231	232

				
Name	Steel Wear Plate (10mm)	Shims for Wear Plate	Steel Slide Plate (20mm)	Slide Plate L-Shape
Model	25STWI	25SMP	25SLSPH	25SOLW
Page	233	234	235	236

เปลี่ยนวัสดุจาก ทองเหลืองคอปเปอร์อัลลอย เป็น ซินเตอร์อัลลอยได้
Switching material from Copper Alloy to Sintered Alloy

สามารถเลือกเปลี่ยนสเปคแวร์เพลทจากวัสดุทองเหลืองคอปเปอร์อัลลอย ฝัง เม็ดกราไฟต์ออยฟรี เป็น วัสดุพิเศษ ซินเตอร์อัลลอยที่มีการรวมสารหล่อลื่นออยฟรีเอาไว้แล้วบนหน้าสไลด์ได้ โปรดสอบถามฝ่ายขายของเรา

Wearplate with Copper Alloy and Oil Free solid lubricant can switch the base material to special Sintered Alloy material. For the Sintered Alloy material wearplate please ask our sale personals.

Copper Alloy Wear Plate



Sintered Alloy Wear Plate



เพิ่มรอยบาก / ร่องน้ำมัน
Adding oil grooves

หากท่านอาจต้องการเพิ่มรอยบาก หรือ ร่องน้ำมัน บนแผ่นแวร์เพลท เราสามารถทำได้ โปรดสอบถามฝ่ายขายของเรา

We can add oil grooves to the wear plates.
Please ask our sale personals for details.

Example of Oil-Grooves

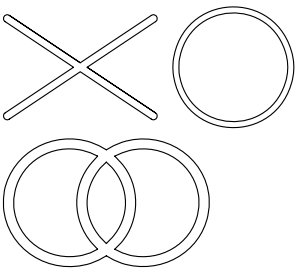

SUN RISE technologies
Tel: +662-324-3184-(89) Fax: +662-324-3190 / +662-324-3103
Website: www.sunrisegr.com Email: sale@sunrisegr.com

ตารางการเลือกสไลด์เพลท | Slide Plate Selection Table

Body Material	ความหนา Thickness	Model	ความกว้าง Width min - max	ความยาว Length min - max	Page
ทองเหลือง คอปเปอร์อัลลอย เกรดรับงานหนัก และ เม็ดหล่อลื่นออยฟรี™ Copper Alloy + Oil Free™ Solid Lubricant	20mm	25SWW 25SWWD 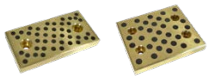	28 - 150	75 - 350	227
	10mm	25STWW 25STWWD 	28 - 150	75 - 250	228
		25MSTS (Compact) 	15 - 22	30 - 75	230
	5mm	25UTWW 	18 - 100	50 - 150	229
	20mm 30mm 45mm	25SOLW (L-Shape) 	26 - 50	100 - 350	236
Cast Iron FC250 + Oil Free™ Solid Lubricant	20mm	25SWF 25SWFD 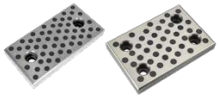	28 - 200	75 - 300	231
Steel S45C + Oil Free™ Solid Lubricant	20mm	25SWI 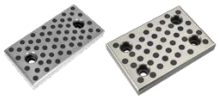	48 - 150	75 - 250	232
Steel SKS3 + Oil Free™ Solid Lubricant	10mm	25STWI 	28 - 125	75 - 150	233
Steel Induction Harden	20mm	25SLSPH 	28 - 150	75 - 300	235

สไลด์เพลท

Copper Alloy Wear Plate (20mm) - แวร์เพลททองเหลืองคอปเปอร์อัลลอย (รุ่นหนา 20มม)

OF OIL FREE™



Ⓜ Copper Alloy
+ Oil Free™ Solid Lubricant

ORDER EXAMPLE | Model | W - L | 25SWW75-100

Model: 25SWW ⚠ W = 28 - 75
25SWWD

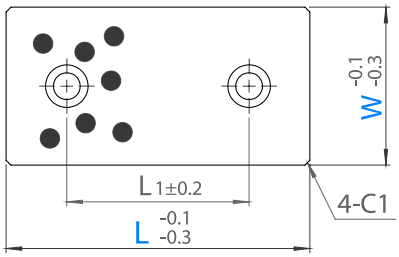

Model: 25SWW ⚠ W = 100 - 150

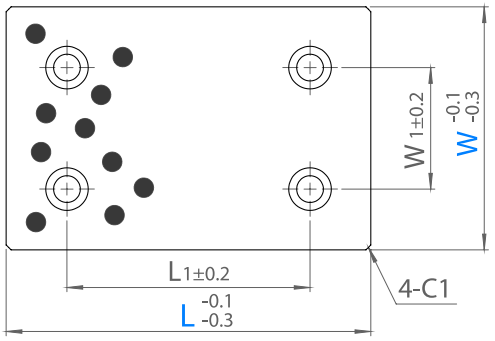

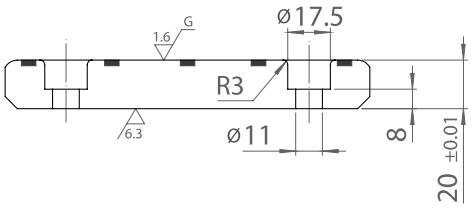

Model	W	L	L1	W1
25SWW	28	75	45	-
		100	50	
		150	100	
	38	75	45	-
		100	50	
		150	100	
	48	75	45	-
		100	50	
		125	75	
		150	100	
		200	150	
	58	75	45	-
		100	50	
		150	100	
	75	75	25	
		100	50	
		125	75	
		150	100	
		200	150	
25SWW 25SWWD	100	100	50	50
		125	75	
		150	100	
		200	150	
		250	200	
		300	200	
	125	125	75	50
		150	100	
		200	150	
		250	200	
		300	200	
		350	200	
	150	150	100	100
		200	150	
		250	200	

SUN RISE technologies
Tel: +662-324-3184-(89) Fax: +662-324-3190 / +662-324-3103
Website: www.sunrisegr.com Email: sale@sunrisegr.com

Copper Alloy Wear Plate (10mm) - แวร์เพลททองเหลืองคอปเปอร์อัลลอย (รุ่นหนา 10มม)

OF OIL FREE™



Copper Alloy
+ Oil Free™ Solid Lubricant

มีสกรูในชุด
Mounting Bolts Included

ORDER EXAMPLE: Model W - L → 25STWW75-100

Model: 25STWW ⚠ W = 28 - 75
25STWWD

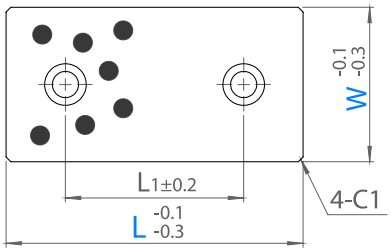

Model: 25STWW ⚠ W = 100 - 150

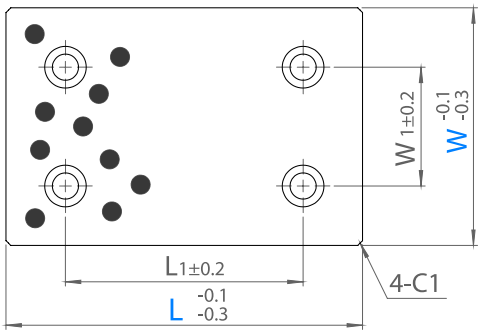

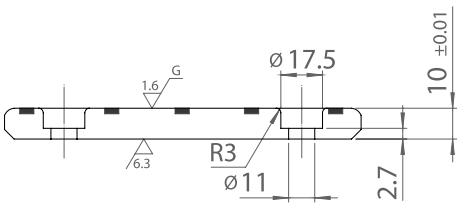

Model	W	L	L1	W1
25STWW	28	75	45	-
		100	50	
		125	75	
		150	100	
	38	75	45	-
		100	50	
		125	75	
		150	100	
	48	75	45	-
		100	50	
		125	75	
		150	100	
		200	150	
	58	75	45	-
		100	50	
		150	100	
	75	75	25	-
		100	50	
		125	75	
		150	100	
		200	150	
25STWW 25STWWD	100	100	50	50
		125	75	
		150	100	
		200	150	
		250	200	
	125	150	100	50
		200	150	
		250	200	
	150	150	100	100
		200	150	

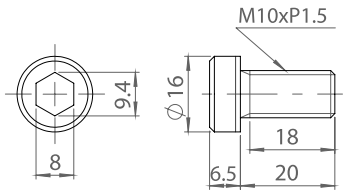

Copper Alloy Wear Plate (5mm) - แวร์เพลททองเหลืองคอปเปอร์อัลลอย (รุ่นหนา 5มม)

OIL FREE™

Model: 25UTWW

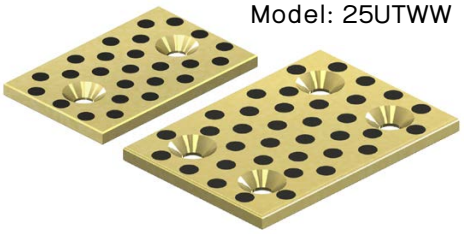

Copper Alloy
+ Oil Free™ Solid Lubricant

มีสกรูในชุด
Mounting Bolts Included

ORDER EXAMPLE: Model W - L → 25UTWW75-100

W = 18 - 38 L = 50 - 100
W = 48 L = 75 - 125

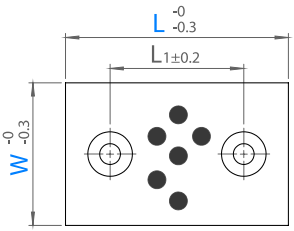

W = 18 - 48 L = 150

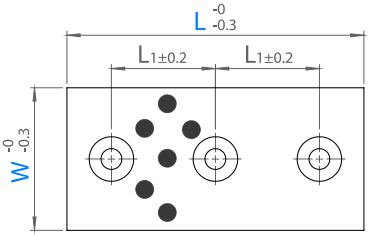

W = 75 L = 75 - 125
W = 100 L = 100 - 125

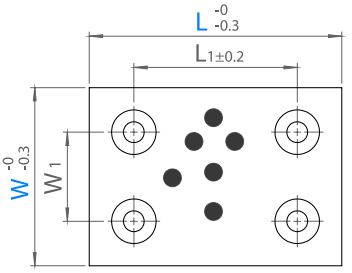

W = 75 - 100 L = 150

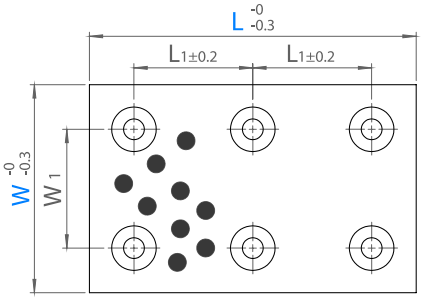

Model	W	L	L1	W1	d	h	Mounting Bolts
25UTWW	18	50	20	-	6.5	1.5	M6
		75	45				
		100	70				
		150	60				
	28	50	20	-	10	0.8	M8
		75	45				
		100	70				
		150	60				
	38	50	20	-	10	0.8	M8
		75	45				
		100	70				
		150	60				
	48	75	45	-	10	0.8	M8
		100	70				
		125	95				
		150	60				
	75	75	45	45	10	0.8	M8
		100	70				
		125	95				
		150	60				
	100	100	70	70	10	0.8	M8
		125	95				
		150	60				

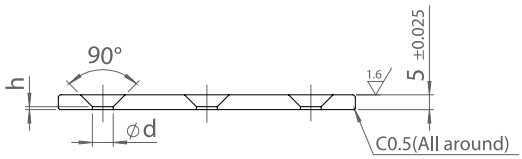

SUN RISE technologies
Tel: +662-324-3184-(89) Fax: +662-324-3190 / +662-324-3103
Website: www.sunrisegr.com Email: sale@sunrisegr.com

Compact Copper Alloy Wear Plate - แวร์เพลทคอปเปอร์อัลลอย ขนาดคอมแพ็ค

OF OIL FREE™

Model: 25MSTS



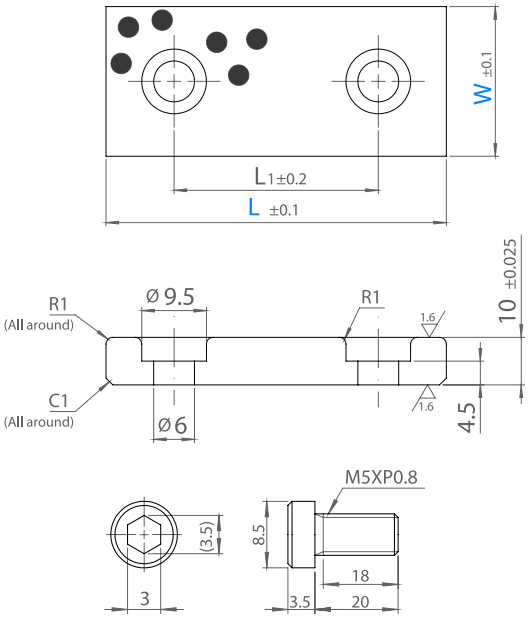

Ⓜ Copper Alloy
+ Oil Free™ Solid Lubricant

ORDER EXAMPLE | Model W - L | 25MSTS18-50

Model	W	L	L1
25MSTS	15	30	14
		40	20
		50	30
		75	50
	18	30	14
		40	20
		50	30
		75	50
	22	30	14
		40	20
		50	30
		75	50

Slide Plates

เปลี่ยนวัสดุจาก ทองเหลืองคอปเปอร์อัลลอย เป็น ซินเตอร์อัลลอยได้
Switching material from Copper Alloy to Sintered Alloy

สามารถเลือกเปลี่ยนสเปคแวร์เพลทจากวัสดุทองเหลืองคอปเปอร์อัลลอย ฝัง เม็ดกราไฟต์ออยฟรี เป็น วัสดุพิเศษ ซินเตอร์อัลลอยที่มีการรวมสารหล่อลื่นออยฟรีเอาไว้แล้วบนหน้าสไลด์ได้ โปรดสอบถามฝ่ายขายของเรา

Wearplate with Copper Alloy and Oil Free solid lubricant can switch the base material to special Sintered Alloy material. For the Sintered Alloy material wearplate please ask our sale personals.

Copper Alloy Wear Plate



Sintered Alloy Wear Plate



เพิ่มรอยบาก / ร่องน้ำมัน
Adding oil grooves

หากท่านอาจต้องการเพิ่มรอยบาก หรือ ร่องน้ำมัน บนแผ่นแวร์เพลท เราสามารถทำได้ โปรดสอบถามฝ่ายขายของเรา

We can add oil grooves to the wear plates.
Please ask our sale personals for details.

Example of Oil-Grooves

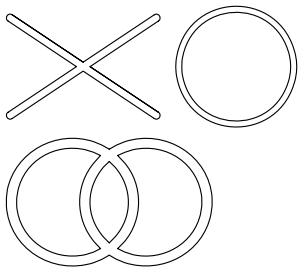

สไลด์เพลท

Cast Iron Wear Plate (20mm) - แวร์เพลทเหล็กหล่อ (รุ่นหนา 20มม)

OF OIL FREE™



ORDER EXAMPLE | Model | W - L | 25SWF75-100

(M) FC250 + Oil Free™ Solid Lubricant

Model: 25SWF
25SWFD
W = 28 - 75

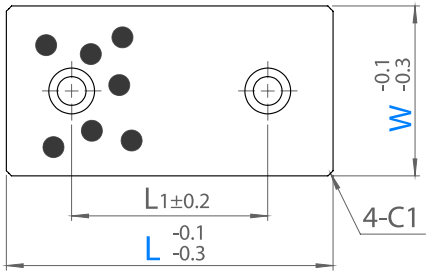

Model: 25SWF
W = 100 - 150

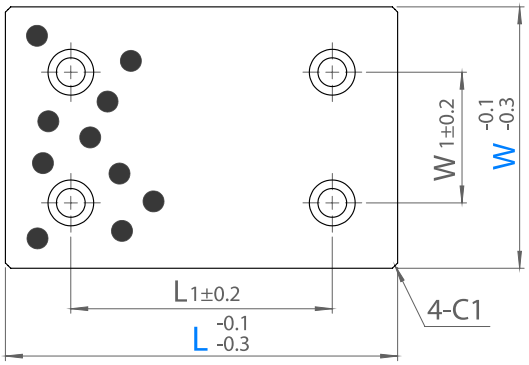

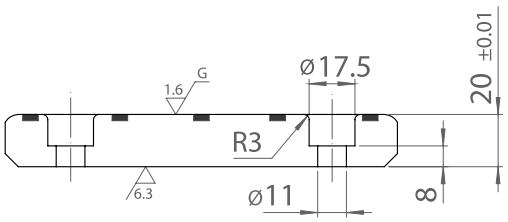

Model	W	L	L1	W1
25SWF	28	75	45	-
		100	50	
		125	75	
		150	100	
		200	150	
	38	75	45	-
		100	50	
		125	75	
		150	100	
		200	150	
	48	75	45	-
		100	50	
		125	75	
		150	100	
		200	150	
	58	75	45	-
		100	50	
		125	75	
		150	100	
	75	75	25	-
		100	50	
		125	75	
		150	100	
		200	150	
		250	200	
		300	100	
25SWF 25SWFD	100	100	50	50
		125	75	
		150	100	
		200	150	
		250	200	
		300	200	
	125	125	75	50
		150	100	
		200	150	
		250	200	
		300	200	
	150	150	100	100
		200	150	
		250	200	
		300	250	
25SWF	200	200	150	150
		250	200	
		300	250	

SUN RISE technologies
Tel: +662-324-3184-(89) Fax: +662-324-3190 / +662-324-3103
Website: www.sunrisegr.com Email: sale@sunrisegr.com

Steel Wear Plate (20mm) - แวร์เพลทเหล็กกล้า (รุ่นหนา 20มม)

OIL FREE™

Model: 25SWI



S45C
+ Oil Free™ Solid Lubricant
45-50HRC (Induction Harden)

ORDER EXAMPLE | Model | W - L | 25SWI75-100

W = 48 - 75

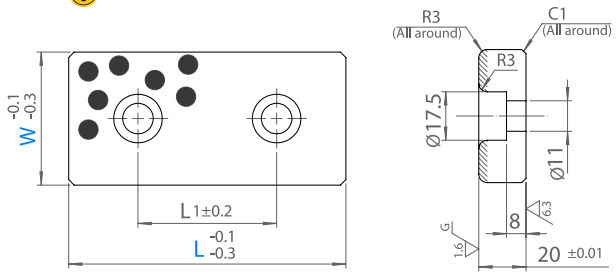

W ≥ 100

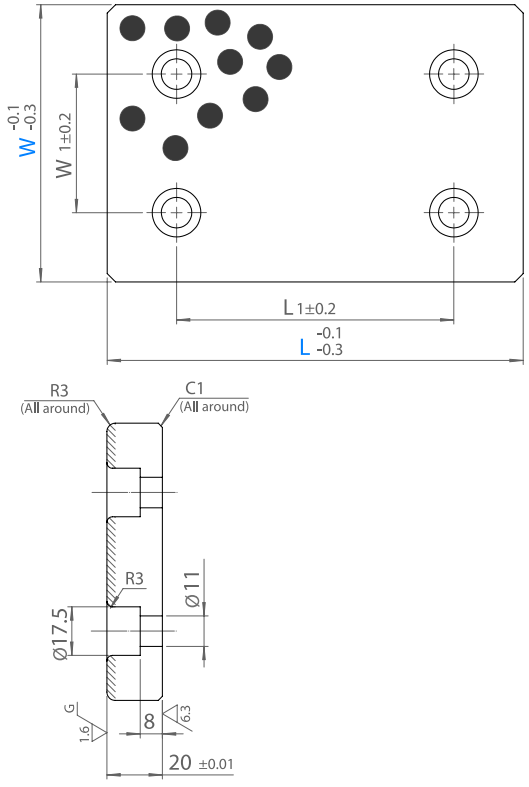

Model	W	L	L1	W1
25SWI	48	75	45	-
		100	50	
		125	75	
		150	100	
		200	150	
	75	75	25	-
		100	50	
		125	75	
		150	100	
		200	150	
	100	100	50	50
		125	75	
		150	100	
		200	150	
		250	200	
	125	125	75	50
		150	100	
		200	150	
		250	200	
	150	150	100	100
		200	150	
		250	200	

สไลด์เพลท

Steel Wear Plate (10mm) - แวร์เพลทเหล็กกล้า (รุ่นหนา 10มม)

OIL FREE™

Model: 25STWI

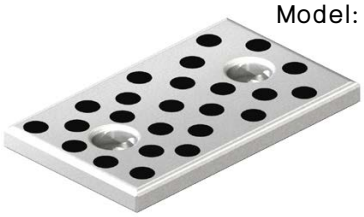

SKS3 (HRC45 ~ 55)
+ Oil Free™ Solid Lubricant

มีสกรูในชุด
Mounting Bolts Included

ORDER EXAMPLE: Model W - L → 25STWI75-100

Model	W	L	L1	W1
25STWI	28	75	45	-
		100	50	
		125	75	
		150	100	
	38	75	45	-
		100	50	
		125	75	
		150	100	
	48	75	45	-
		100	50	
		125	75	
		150	100	
	75	75	25	-
		100	50	
		125	75	
		150	100	
	100	100	50	50
		125	75	
		150	100	
		200	150	
	125	125	75	50
		150	100	

W = 28 - 75

R2 สำหรับ W = 28 เท่านั้น
R2 only for W = 28

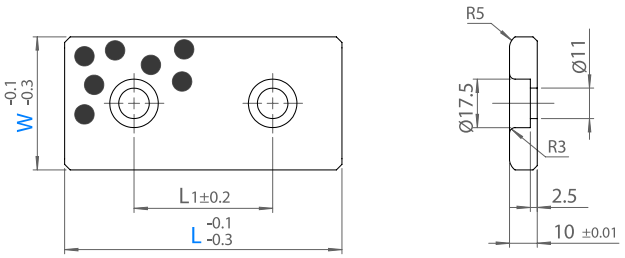

W ≥ 100

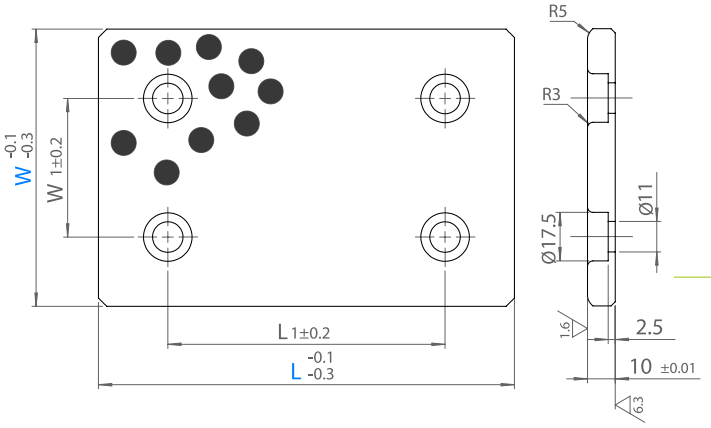

SUN RISE technologies
Tel: +662-324-3184-(89) Fax: +662-324-3190 / +662-324-3103
Website: www.sunrisegr.com Email: sale@sunrisegr.com

Shims for Wear Plate - แผ่นชิม สำหรับแวร์เพลท

OIL FREE™

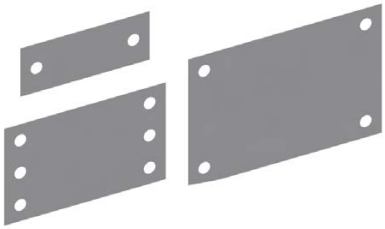

ORDER EXAMPLE: Model W - L - T → 25SMP75-100-0.10

Ⓜ Stainless Steel (Shim Grade)

Model: 25SMP

W = 28 - 75

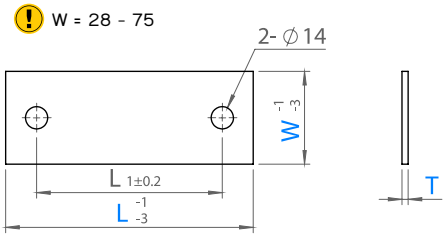

W = 100 - 150

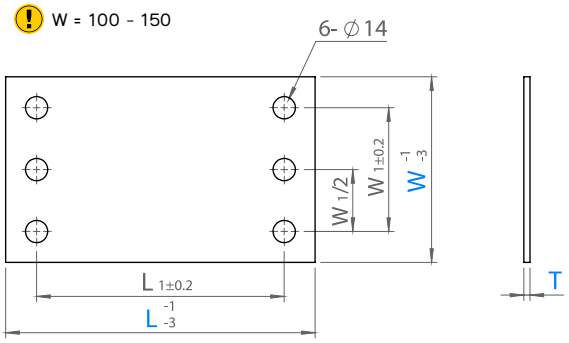

W = 200

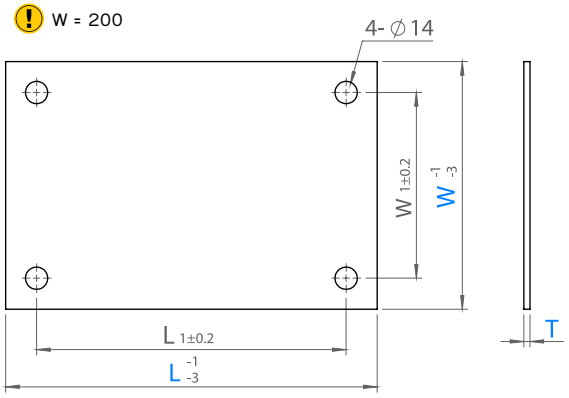

25SMP

Model	W	L	T	L1	W1
	28	75	0.05 0.10 0.20 0.30 0.40 0.50 1.00 2.00	45	-
		100		50	
		125		75	
		150		100	
		200		150	
	38	75		45	-
		100		50	
		125		75	
		150		100	
		200		150	
	48	75		45	-
		100		50	
		125		75	
		150		100	
		200		150	
	58	75		45	-
		100		50	
		150		100	
	75	75		45	-
		100		50	
		125		75	
		150		100	
		200		150	
	100	100		50	50
		125		75	
		150		100	
		200		150	
		250		200	
		300		200	
	125	125		75	50
		150		100	
		200		150	
		250		200	
		300		200	
		350		200	
	150	150		100	100
		200		150	
		250		200	
		300		250	
	200	200		150	150
		250		200	
		300		250	

สไลด์เพลท

Steel Slide Plate (20mm) - สไลด์เพลทเหล็กกล้า (รุ่นหนา 20มม)

OIL FREE™

Model: 25SLSPH



M S45C (HRC55 or more)

58-62HRC (Induction Harden)

ORDER EXAMPLE: Model W - L → 25SLSPH75-100

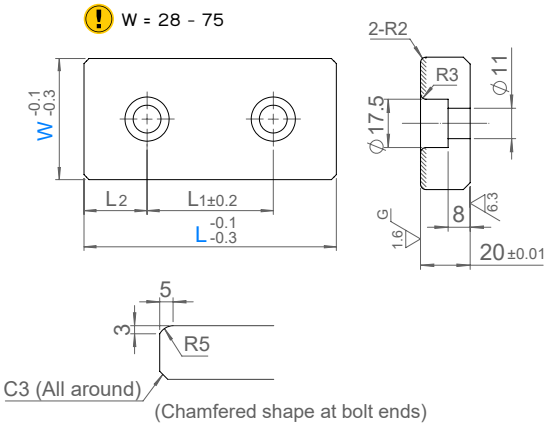

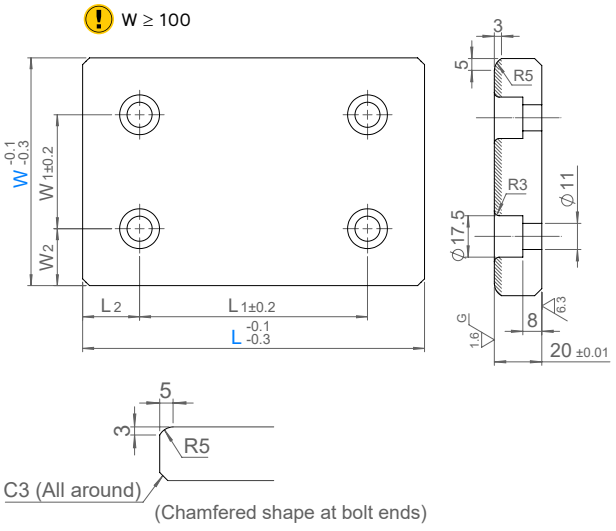

Model	W	L	W1	W2	L1	L2
25SLSPH	28	75	-	-	45	15
		100			50	25
		150			100	
	38	75	-	-	45	15
		100			50	25
		150			100	
	48	75	-	-	45	25
		100			50	
		125			75	
		150			100	
		200			150	
		250			200	
	58	75	-	-	45	
		100			50	
		150			100	
	75	75	-	-	45	
		100			50	
		125			75	
		150			100	
		200			150	
		250			200	
	100	100	50	25	50	
		125			75	
		150			100	
		200			150	
		250			200	
		300			200	
	125	125	50	37.5	75	
		150			100	
		200			150	
		250			200	
		300			200	
		350			200	
	150	150	100	25	100	
		200			150	
		250			200	

SUN RISE technologies
Tel: +662-324-3184-(89) Fax: +662-324-3190 / +662-324-3103
Website: www.sunrisegr.com Email: sale@sunrisegr.com

Slide Plate L-Shape - สไลด์เพลทตัวแอล

OF OIL FREE™

Model: 25SOLW

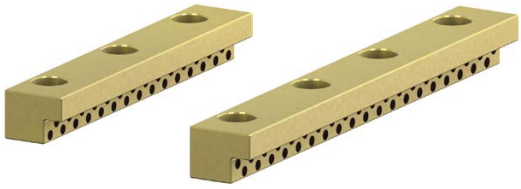

แบบตามด้านยาว (L)
Drawing for each length (L)

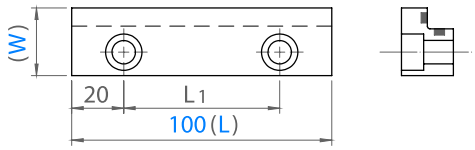

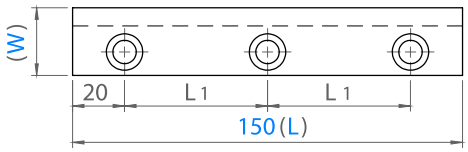

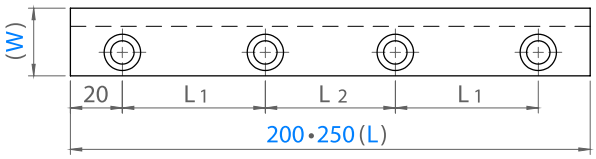

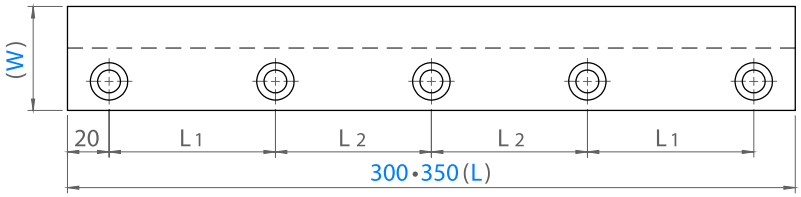

แบบตามด้านกว้าง (W)
Drawing for each width (W)

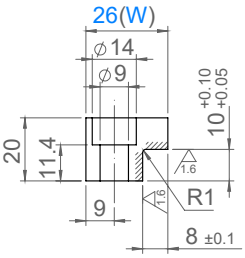

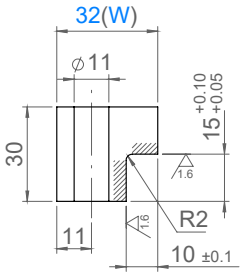

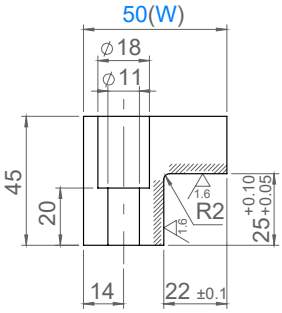

ORDER EXAMPLE | Model | W - L | 25SOLW32-100

Ⓜ Copper Alloy
+ Oil Free™ Solid Lubricant

Model	W	L	L1	L2	Mounting Bolts	
					Size	No.
25SOLW	26	100	60	-	M8	2
		150	55			3
		200		50		4
	32	100	60	-	M10	2
		150	55			3
		200		50		4
		250	70	70		
	50	200	55	50		
		250	70	70		
		300	65	65		5
		350	80	75		

แคมสไลด์
CAM SLIDES

				
Name	CAM Upper Plate	Steel CAM Upper	Copper Alloy CAM Upper	Steel CAM Upper
Model	25SCU(W,F,I,S) / 25CUP(W,F,I,S)	25CUPH	25CSDPW	25SCPAH
Page	239 - 240	241	241	242

				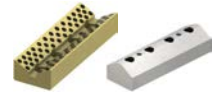
Name	Steel CAM Upper	CAM Side Block	CAM V Guide	CAM V Guide
Model	25SCPH	25MSRGW / 25MSRGI / 25MSRGF	25CGW / 25CGI	25CGWL / 25CGIL
Page	242	243	244	245

				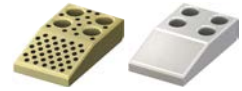
Name	CAM Center Key	Steel CAM Center Key	CAM Center Key	15Degree CAM Dwell Plate
Model	25CKB	25SFCI / 25SFCIB	25CKBF / 25CKBI / 25CKBW	25CDPWS / 25CDPIS
Page	246	246	247	248

			
Name	30Degree CAM Dwell Plate	45Degree CAM Dwell Plate	Compact CAM Dwell Plate
Model	25CDPW / 25CDPI / 25CMCSA	25CDPQW / 25CDPQI	25CDPWL / 25CDPIL
Page	249	250	251

				
Name	CAM Pad Guide Plate	CAM Positive Return Follower	CAM Positive Return Follower	CAM Positive Return Follower
Model	25CPGPW	25CPRIH / 25CPRI	25CPRIE / 25CPRIF	25CKRZW
Page	252	253	254	255

	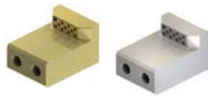		
Name	CAM Positive Return Follower	CAM Positive Return Follower	CAM Positive Return Follower
Model	25CKRLW / 25CKRLI	25CPKW / 25CPKI / 25CPKH	25CPBW / 25CPBWS
Page	255	256	256

SUN RISE technologies
Tel: +662-324-3184-(89) Fax: +662-324-3190 / +662-324-3103
Website: www.sunrisegr.com Email: sale@sunrisegr.com







Name	CAM Positive Return Plate	CAM Stoppper	Shock Absorb Stopper
Model	25CRPW / 25CRPWR / 25CRPWL	25CSTA / 25CSTU	25UCST
Page	257	258	258







Name	Spring Unit for Cam Return	Spring Unit for Cam Return	Double Spring Unit for Cam Return
Model	25STOKSL / 25STOKSF / 25TRP	25SUL / 25SUM (40,50,60)	25SWUL / 25SWUM (50,60)
Page	259 - 260	261 - 266	267 - 268

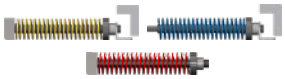

Name	CAM Return Units
Model	25SUKI / 25SUKS / 25SUKA / 25SUKSA / 25SUKFP / 25SUKFA
Page	269 - 270

ชิ้นส่วนแคมสไลด์

CAM Upper Plate - แคมอัพเปอร์เพลท

OF OIL FREE™



25SCUW (M) Copper Alloy + Oil Free™ Solid Lubricant

25SCUF (M) FC250 + Oil Free™ Solid Lubricant

25SCUI (M) S45C + Oil Free™ Solid Lubricant

25SCUS (M) Sintered Alloy

S Area (M) 40HRC~(Induction Harden)

ORDER EXAMPLE: Model W - L → 25SCUW52-200

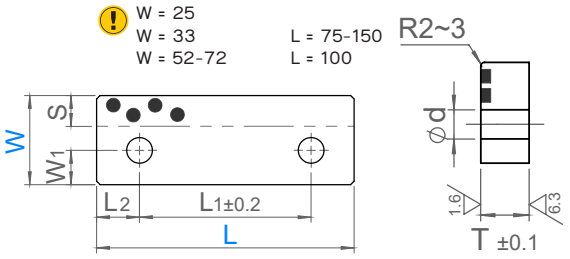

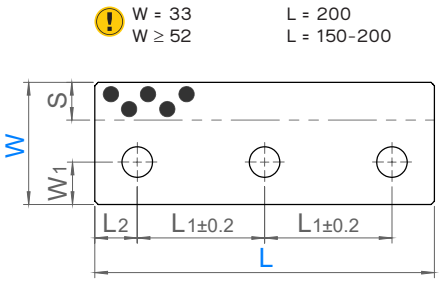

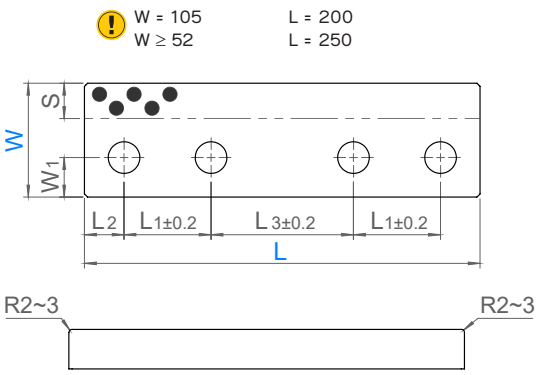

Model	W	L	T	L1	L2	L3	W1	S	d
25SCUW 25SCUI	25	75	10	45	15	-	8	7.5	9
		100		50	25				
		125		75					
	33	75		45	15		12.5	9	11
		100		50	25				
		125		75					
		150		100					
		200		75					
25SCUW 25SCUF 25SCUI 25SCUS	52	100	20	50	25	-	20	13	13
		150		50					
		200		75					
		250		75		50			
	72	100	30	50	25	-	25	22	18
		150		50					
		200		75					
		250		75		50			
	77	150	35	50	25	-	25	27	18
		200		75					
		250		75		50			
	82	150	40	50	25	-	25	32	18
		200		75					
		250		75		50			
25SCUW 25SCUF 25SCUI	105	150	40	50	25	-	25	32	18
		200		50		50			
		250		75					

SUN RISE technologies
Tel: +662-324-3184-(89) Fax: +662-324-3190 / +662-324-3103
Website: www.sunrisegr.com Email: sale@sunrisegr.com

CAM Upper Plate - แคมอัพเปอร์เพลท

OF OIL FREE™



25CUPW (M) Copper Alloy + Oil Free(TM) Solid Lubricant

25CUPF (M) FC250 + Oil Free(TM) Solid Lubricant

25CUPI (M) S45C + Oil Free(TM) Solid Lubricant

25CUPS (M) Sintered Alloy

S Area (M) 40HRC~(Induction Harden)

ORDER EXAMPLE: Model W - L → 25CUPW70-200

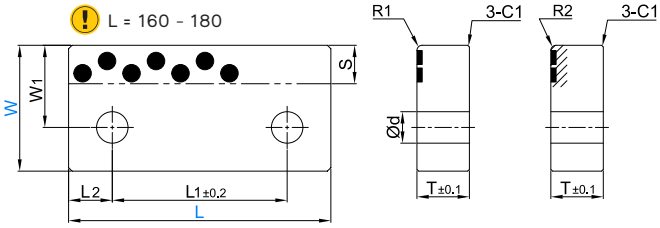

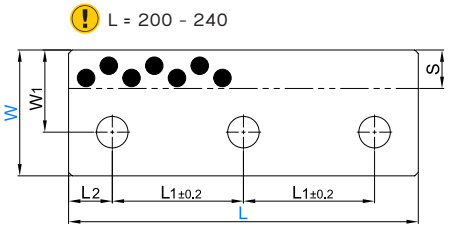

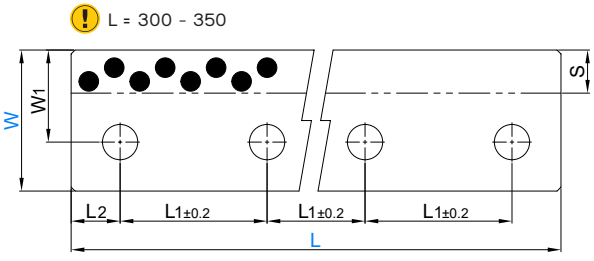

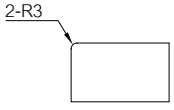

Model	W	L	T	W1	L1	L2	d	S
25CUPW 25CUPF 25CUPS 25CUPI	55	180	25	37.5	120	30	18	24
	70	160		50	110	25	18	25
		200			75	25		25
		240			90	30		30
	85	200	28	60	75	25	22	30
		240			90	30		
		300			80	30		
		350			90	40		
	100	200			75	25		
		240			90	30		
		300			80	30		
		350			90	40		

ชิ้นส่วนแคมสไลด์

Steel CAM Upper Plate - แคมอัพเปอร์เพลท เหล็กกล้า

OF OIL FREE™

Model: 25CUPH



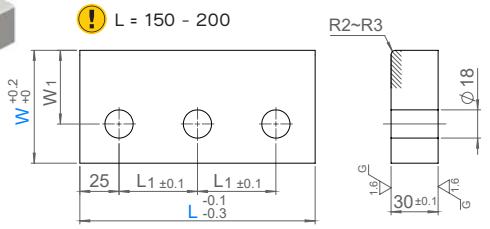

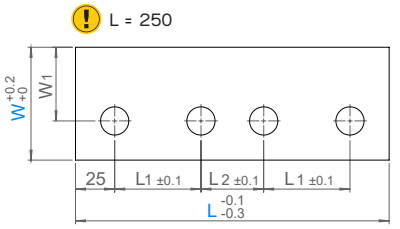

M S45C

55HRC~(Induction Harden)

ORDER EXAMPLE | Model | W - L | 25CUPH67-150

Model	W	L	W1	L1	L2
25CUPH	67	150	42	50	-
		200		75	
		250			50
	82	150	57	50	-
		200		75	
		250			50

Copper Alloy CAM Slide Plate - แคมอัพเปอร์เพลท คอปเปอร์อัลลอย

OF OIL FREE™

Model: 25CSDPW





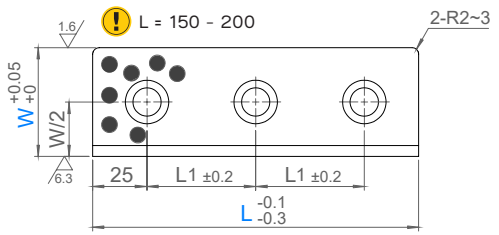

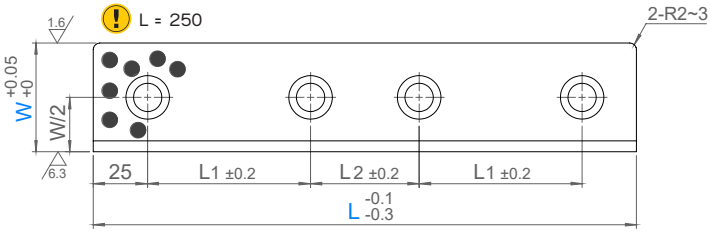

ORDER EXAMPLE | Model | W - L | 25CSDPW50-200

M Copper Alloy + Oil Free™ Solid Lubricant

Model	W	L	T	L1	L2	d	d1	h
25CSDPW	50	150	20	50	-	11	17.5	8
		200		75				
		250			50			
		150	35	50	-	13	20	20
		200		75				
		250			50			
	75	150	20	50	-	11	17.5	8
		200		75				
		250			50			
		150	35	50	-	13	20	20
		200		75				
		250			50			

SUN RISE technologies
Tel: +662-324-3184-(89) Fax: +662-324-3190 / +662-324-3103
Website: www.sunrisegr.com Email: sale@sunrisegr.com

Steel CAM Upper Plate - แคมอัพเปอร์เพลท เหล็กกล้า

Model: 25SCPAH

OF OIL FREE™





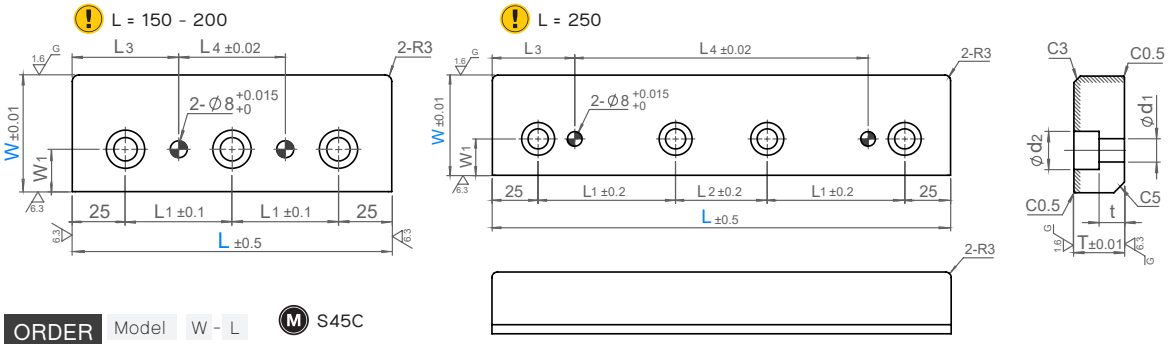

ORDER EXAMPLE: Model W - L → 25SCPAH55-200

M S45C

55HRC~(Induction Harden)

Model	W	L	T	L1	L2	L3	L4	W1	t	d1	d2
25SCPAH	55	150	20	50	-	45	60	20	8	11	18
		200		75			110				
		250			50		160				
	80	150	35	50	-	50	50	25	21	13	20
		200		75			100				
		250			50		150				
	95	150	50	50	-	55	40	35	32	18	26
		200		75			90				
		250			50		140				

Steel CAM Upper Plate - แคมอัพเปอร์เพลท เหล็กกล้า

Model: 25SCPH

OF OIL FREE™



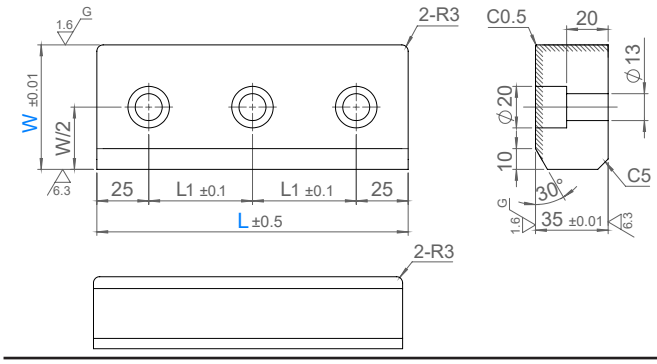

M S45C

55HRC~(Induction Harden)

ORDER EXAMPLE: Model W - L → 25SCPH60-200

Model	W	L	L1
25SCPH	60	150	50
		200	75
		250	100
	80	150	50
		200	75
		250	100

ชิ้นส่วนแคมสไลด์

CAM Side Block - แคมไซด์บล็อค

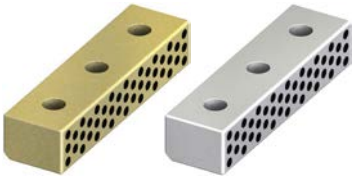

OIL FREE™

25MSRGW	M	Copper Alloy + Oil Free™ Solid Lubricant
25MSRGI	M	S45C + Oil Free™ Solid Lubricant
25MSRGF	M	FC250 + Oil Free™ Solid Lubricant

ORDER EXAMPLE | Model | W - L - T | 25MSRGW40-200-30

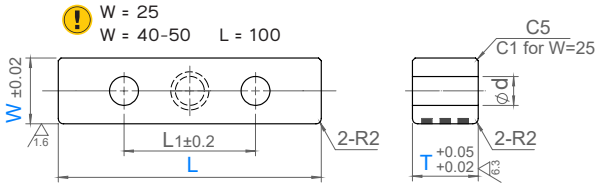

* Holes for safety bolt are optional for W=40 and 50 only

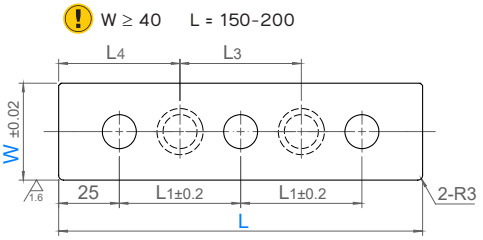

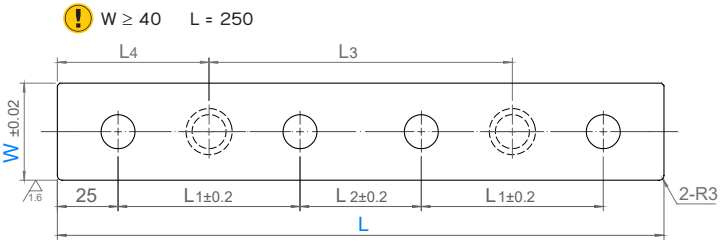

Model	W	L	T	L1	L2	d
25MSRGW 25MSRGI 25MSRGF	25	75	25	45	-	11
		100		50		
		125		75		
		150		100		
	40	100	30	50	-	14
		150				
		200		75		
		250			50	
		100	40	50	-	14
		150				
		200		75		
		250			50	
	50	100	45	50	-	20
		150				
		200		75		
		250			50	
		100	55	50	-	20
		150				
		200		75		
		250			50	
		150	60	50	-	20
		200		75		
		250			50	
		150	70	50	-	20
		200		75		
		250			50	

การปรับแต่งเสริม | Options

OPTION EXAMPLE | Model | W - L - T - ZA | 25MSRGW40-200-30-ZA

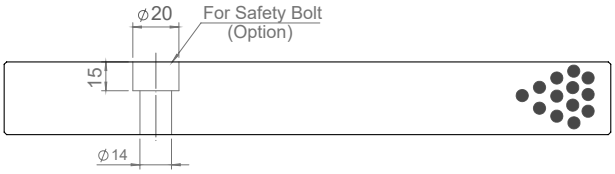

Option	Description
ZA	เจาะรูยึดสกรู Safety Bolt Holes (W = 40 & 50 only)

L	L3	L4
150	50	50
200	75	62.5
250	125	62.5

SUN RISE technologies
Tel: +662-324-3184-(89) Fax: +662-324-3190 / +662-324-3103
Website: www.sunrisegr.com Email: sale@sunrisegr.com

CAM V Guide - แคมไกด์ตัววี

OIL FREE™

Model: 25CGW

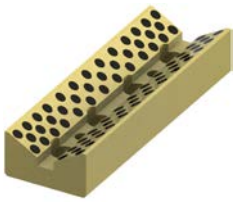

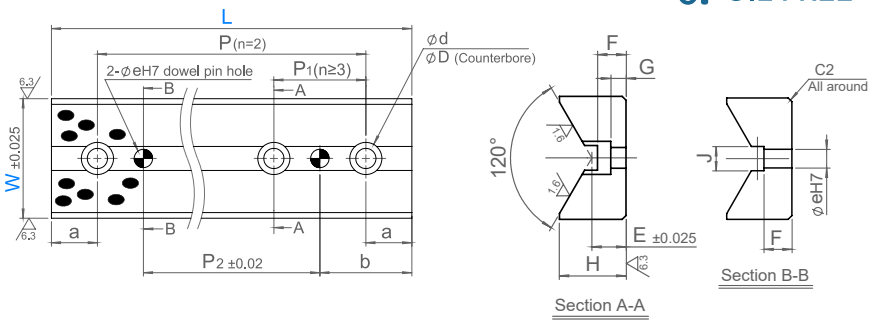

ORDER EXAMPLE: Model W - L → 25CGW50-100

Ⓜ Copper Alloy + Oil Free™ Solid Lubricant

Model	W	L	H	a	b	P	P1	No. Bolt Holes n	e	P2	E	F	G	J	d	D
25CGW	35	75	24	15	30	45	-	2	8	15	15	15	4	11	9	14
		100		20	40	60				20						
		125				85				45						
		150				110				70						
	50	75	31	15	30	45	-	2	10	15	18	15	8	13	11	17.5
		100		20	40	60				20						
		125		25	50	75				25						
		150		25	50	100				50						
	65	100	35	20	40	60	-	2	10	20	18	15	8	10	11	17.5
		150		25	50	-	50	3		50						
		200						4		100						
		250						5		150						
		300						6		200						

Model: 25CGI



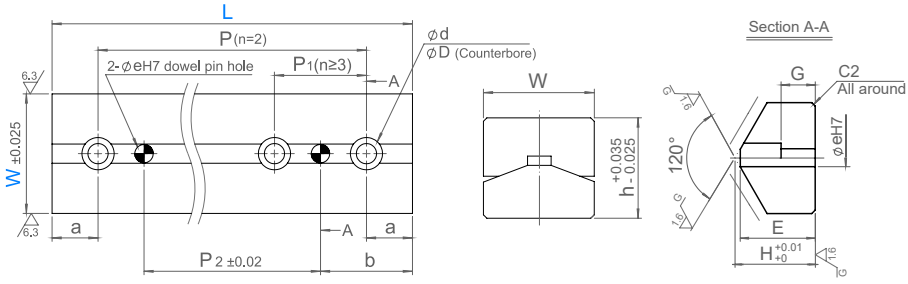

ORDER EXAMPLE: Model W - L → 25CGI50-100

Ⓜ S45C 55HRC-

Model	W	L	H	a	b	P	P1	No. Bolt Holes n	e	P2	E	G	d	D	h
25CGI	35	75	20	15	30	45	-	2	8	15	17	4	9	14	35
		100		20	40	60				20					
		125				85				45					
		150				110				70					
	50	75	32	15	30	45	-	2	10	15	29	10	11	17.5	50
		100		20	40	60				20					
		125		25	50	75				25					
		150				100				50					
	65	100	47	20	40	60	-	2	10	20	44	20	11	17.5	65
		150		25	50	-	50	3		50					
		200						4		100					
		250						5		150					
		300						6		200					

OIL FREE™

Model: 25CGWL

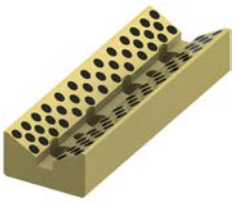

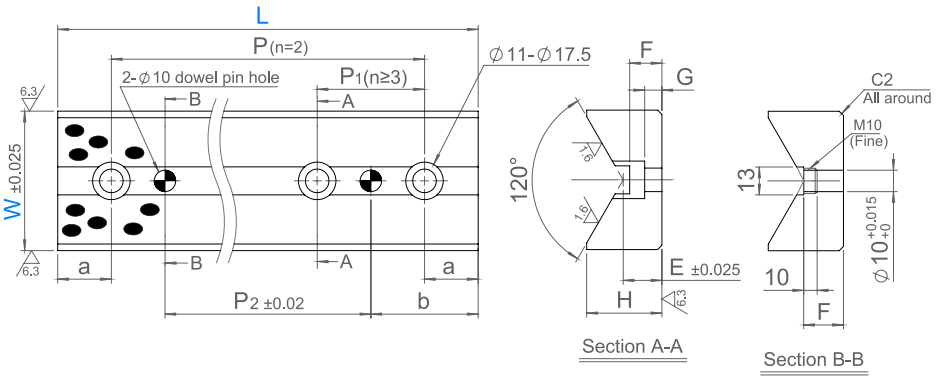

ORDER EXAMPLE: Model W - L → 25CGWL65-100

Ⓜ Copper Alloy + Oil Free™ Solid Lubricant

Model	W	L	H	a	b	P	P1	No. Bolt Holes n	P2	E	F	G
25CGWL	65	100	37	20	40	60	-	2	20	20	20	10
		125		25	50	75			25			
		150				100			50			
		200				-	75	3	100			
		250					100		150			
		300					125		200			

Model: 25CGIL



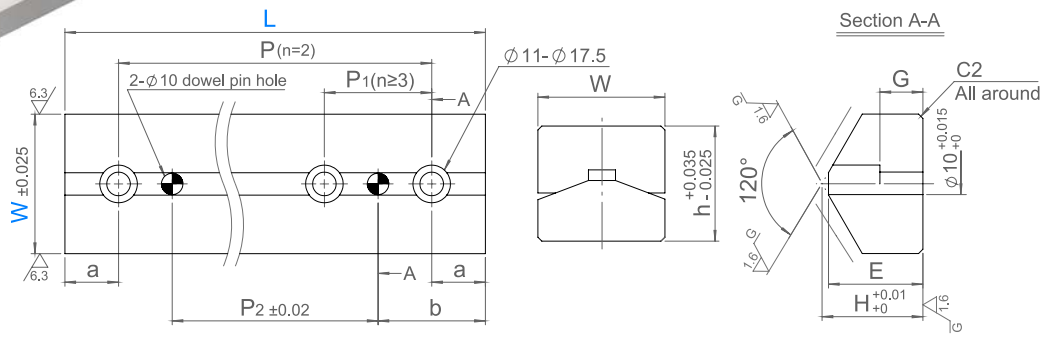

ORDER EXAMPLE: Model W - L → 25CGIL65-100

Ⓜ S45C 55HRC~

Model	W	L	H	h	a	b	P	P1	No. Bolt Holes n	P2	E	G
25CGIL	65	100	30	50	20	40	60	-	2	20	26	10
		125			25	50	75			25		
		150					100			50		
		200					-	75	3	100		
		250						100		150		
		300						125		200		

Tel: +662-324-3184-(89) Fax: +662-324-3190 / +662-324-3103
Website: www.sunrisegr.com Email: sale@sunrisegr.com

CAM Center Key - แคมเซ็นเตอร์คีย์

Model: 25CKB

OIL FREE™



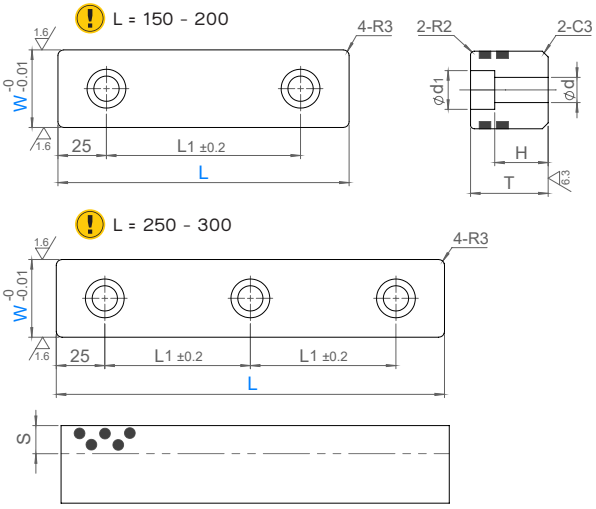

Ⓜ FC250 + Oil Free™ Solid Lubricant

ORDER EXAMPLE: Model W - L — 25CKB40-200

Model	W	L	T	L1	S	d	d1	H
25CKB	40	150	45	100	15	13	20	30
		200		150				
		250		100				
	60	150	60	100	20	18	32	38
		200		150				
		250		100				
		300		125				

Steel CAM Center Block - แคมเซ็นเตอร์ เหล็กกล้า

Model: 25SFCI

OIL FREE™



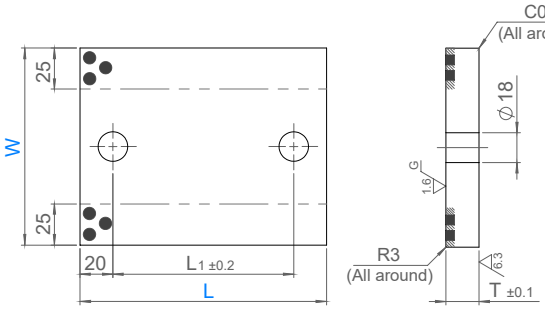

Ⓜ S45C

40-45HRC-(Induction Harden)

ORDER EXAMPLE: Model W - L — 25SFCI120-100

Model	W	L	T	L1
25SFCI	120	100	25	60
		150		110

Model: 25SFCIB



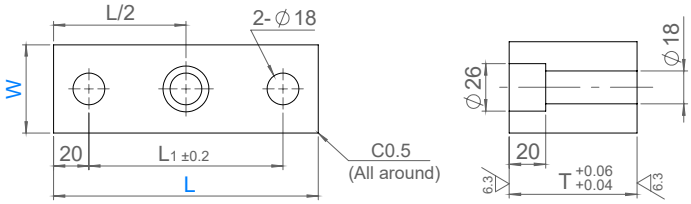

Ⓜ SS400

ORDER EXAMPLE: Model W - L — 25SFCIB50-100

Model	W	L	T	L1
25SFCIB	50	100	80	60
		150		110

ชิ้นส่วนแคมสไลด์

CAM Center Key - แคมเซ็นเตอร์คีย์

OIL FREE™



25CKBF Ⓜ FC250 + Oil Free™ Solid Lubricant

25CKBI Ⓜ S50C + Oil Free™ Solid Lubricant

25CKBW Ⓜ Copper Alloy + Oil Free™ Solid Lubricant

S Area Ⓜ 40-45HRC-(Induction Harden)

ORDER EXAMPLE: Model W - L → 25CKBF30-100

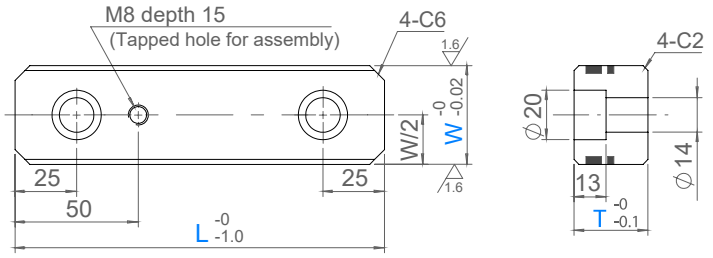

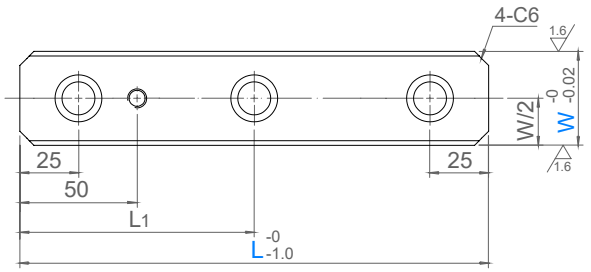

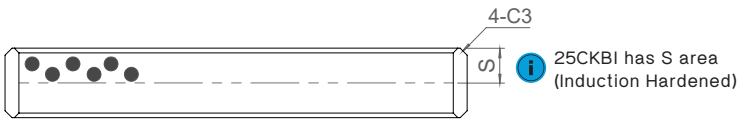

ⓘ 25CKBI has S area (Induction Hardened)

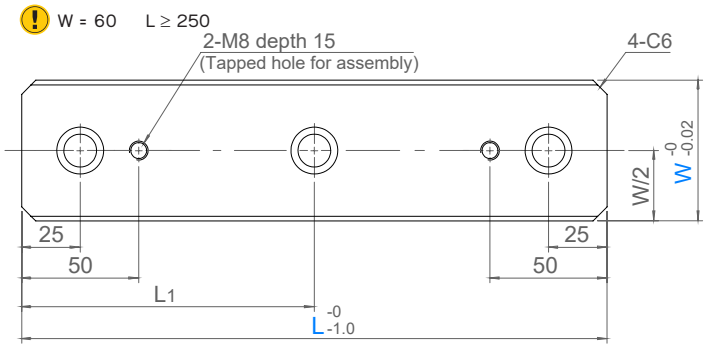

Model	W	L	T	L1	S
25CKBF 25CKBI	30	100	30	-	15
		150		-	
		200		100	
		250		125	
		300		150	
		350		175	
	40	100		-	
		150		-	
		200		100	
		250		125	
		300		150	
		350		175	
25CKBF 25CKBI 25CKBW	40	100	40	-	20
		150		-	
		200		100	
		250		125	
		300		150	
		350		175	
25CKBW	60	100	40	-	25
		250		125	
		300		150	
		350		175	

SUN RISE technologies
Tel: +662-324-3184-(89) Fax: +662-324-3190 / +662-324-3103
Website: www.sunrisegr.com Email: sale@sunrisegr.com

15Deg CAM Dwell Plate - แคมดเวลเพลท 15องศา

OF OIL FREE™



Model: 25CDPWS



Model: 25CDPIS

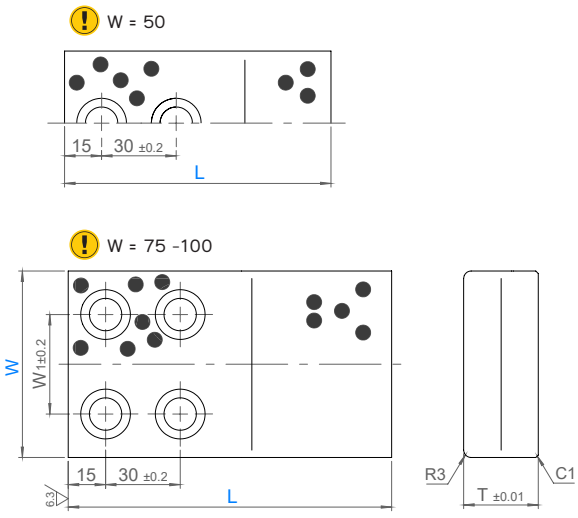

Ⓜ Copper Alloy + Oil Free™ Solid Lubricant

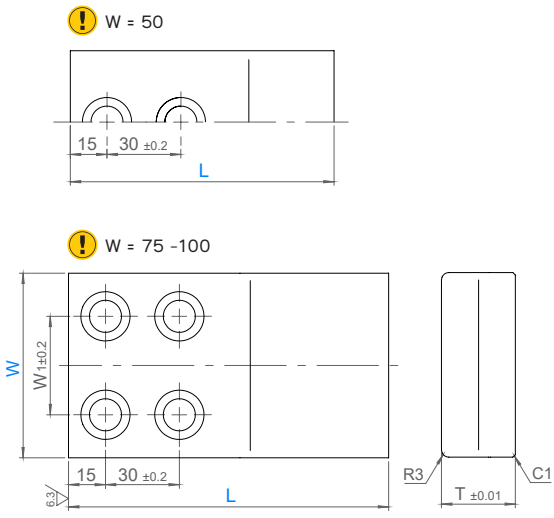

Ⓜ S45C

55HRC-(Induction Harden)

ORDER EXAMPLE Model W - L

25CDPWS50-110

Model	W	L	T	W1
25CDPWS 25CDPIS	50	110	25	-
		130	30	
	75	110	25	40
		130	30	
	100	110	25	60
		130	30	

ชิ้นส่วนแคมสไลด์

30Deg CAM Dwell Plate - แคมดเวลเพลท 30องศา

OIL FREE™



Model: 25CDPW



Model: 25CDPI

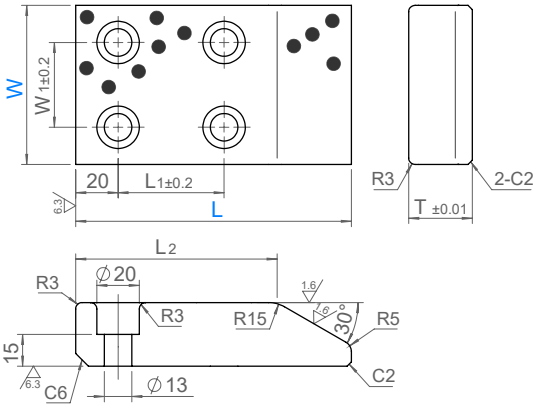

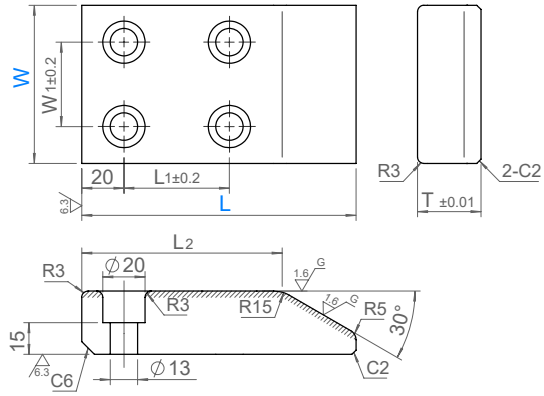

ORDER EXAMPLE: Model W - L → 25CDPW100-150

(M) Copper Alloy + Oil Free™ Solid Lubricant

(M) S45C

55HRC~(Induction Harden)

Model	W	L	T	W1	L1	L2
25CDPW 25CDPI	75	130	30	40	50	95
		150	45		45	90
	100	130	30	60	50	95
		150	45		45	90
		170	60			
		200			75	120
	125	130	30	85	50	95
		150	45		45	90
		170	60			
		200			75	120
	150	130	30	110	50	95
		150	45		45	90
		170	60			
		200			75	120

ORDER EXAMPLE: Model W - L - T → 25CMCSA100-150-0.10

(M) Stainless Steel (Shim Grade)

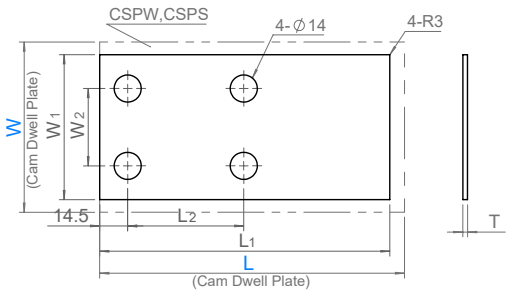

Model	W	L	T	W1	L1	W2	L2
25CMCSA	75	130	0.05 0.10	65	120	40	50
		150			140		45
	100	130		90	120	60	50
		150			140		45
		170			160		
		200			190		75
	125	130		115	120	85	50
		150			140		45
		170			160		
		200			190		75
	150	130		140	120	110	50
		150			140		45
		170			160		
		200			190		75

SUN RISE technologies
Tel: +662-324-3184-(89) Fax: +662-324-3190 / +662-324-3103
Website: www.sunrisegr.com Email: sale@sunrisegr.com

45Deg CAM Dwell Plate - แคมดเวลเพลท 45องศา

OF OIL FREE™



Model: 25CDPQW



Model: 25CDPQI

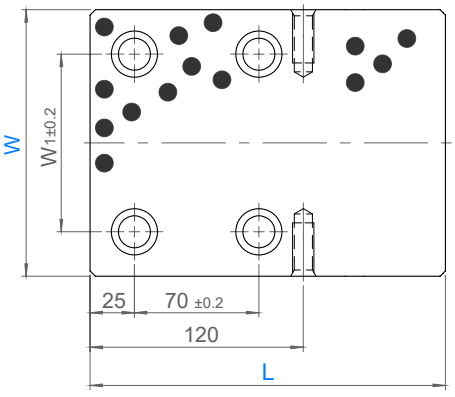

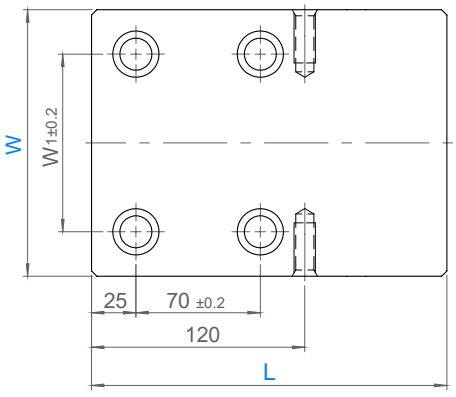

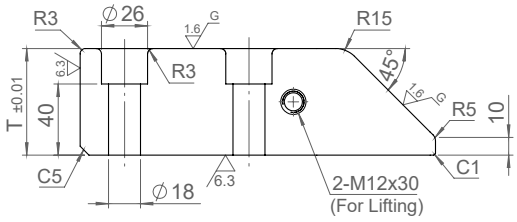

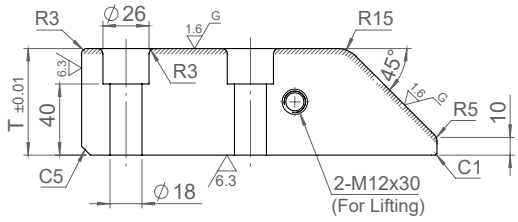

Ⓜ Copper Alloy + Oil Free™ Solid Lubricant

Ⓜ S45C

55HRC~(Induction Harden)

ORDER EXAMPLE: Model W - L → 25CDPQW150-170

Model	W	L	T	W1
25CDPQW 25CDPQI	150	170	60	100
		200	90	
	200	170	60	140
		200	90	

ชิ้นส่วนแคมสไลด์

Compact CAM Dwell Plate - แคมดเวลเพลท รุ่นคอมแพค

OIL FREE™



Model: 25CDPWL



Model: 25CDPIL

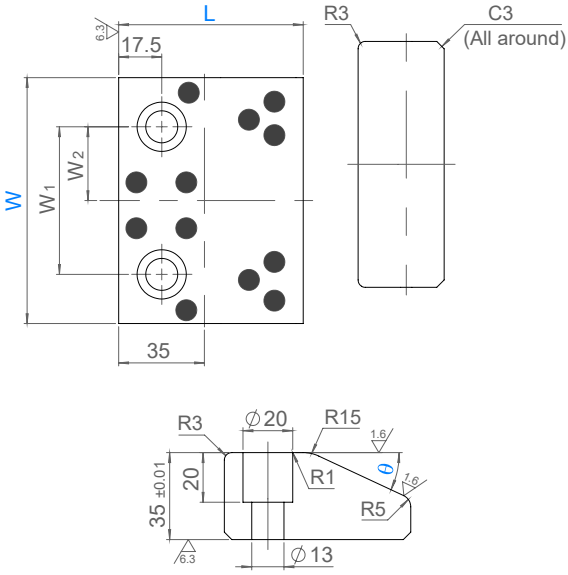

Ⓜ Copper Alloy + Oil Free™ Solid Lubricant

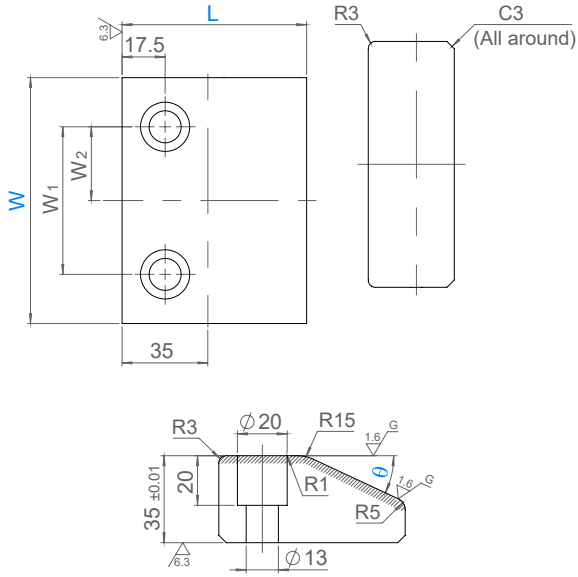

Ⓜ SK5

58-62HRC (Induction Harden)

ORDER EXAMPLE Model W - L

25CDPWL100-75

Model	W	L	θ	W1	Mounting Bolts
25CDPWL 25CDPIL	100	75	25	60	M12x40 (x2pcs)
			30		
	150		25	110	
			30		

Cam Slides

SUN RISE technologies
Tel: +662-324-3184-(89) Fax: +662-324-3190 / +662-324-3103
Website: www.sunrisegr.com Email: sale@sunrisegr.com

CAM Pad Guide Plate - แคมแพ็ทไกด์เพลท

OIL FREE™

Model: 25CPGPW

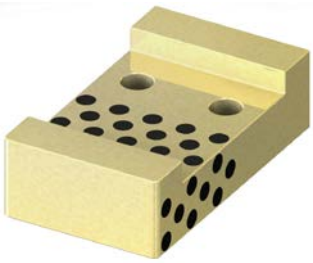

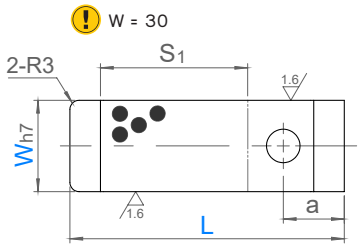

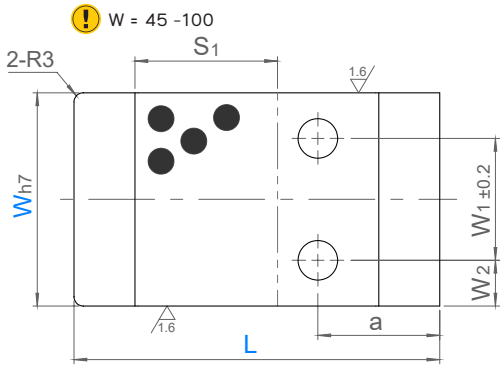

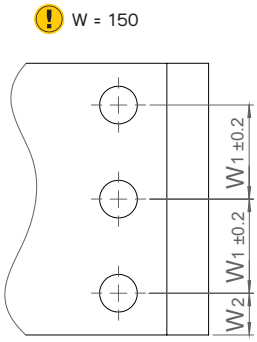

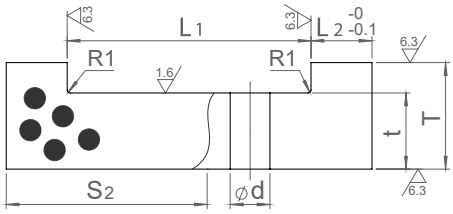

ORDER EXAMPLE Model W - L 25CPGPW45-70

Ⓜ Copper Alloy + Oil Free™ Solid Lubricant

Model	W	L	T	W1	W2	L1	L2	t	a	d	S1	S2	W h7	
25CPGPW	30	70	17	-	-	50	10	12	20	11	30	40	30	0 -0.021
		90				70					50	60		
	45	70	25	22	11.5	50	10	15	20	11	30	40	45	0 -0.025
		90				70					50	60		
	60	120	35	30	15	80	20	25	40	13	40	60	60	0 -0.030
		140				100					60	80		
		160				120					80	100		
	100	120	35	70	15	80	20	25	40	18	40	60	100	0 -0.035
		140				100					60	80		
		160				120					80	100		
	150	120	35	60	15	80	20	25	40	18	40	60	100	0 -0.040
		140				100					60	80		
		160				120					80	100		
		180				140					100	120		

ชิ้นส่วนแคมสไลด์

CAM Positive Return Follower - แคมโพซิทีฟรีเทอร์น

OIL FREE™

Model: 25CPRIH



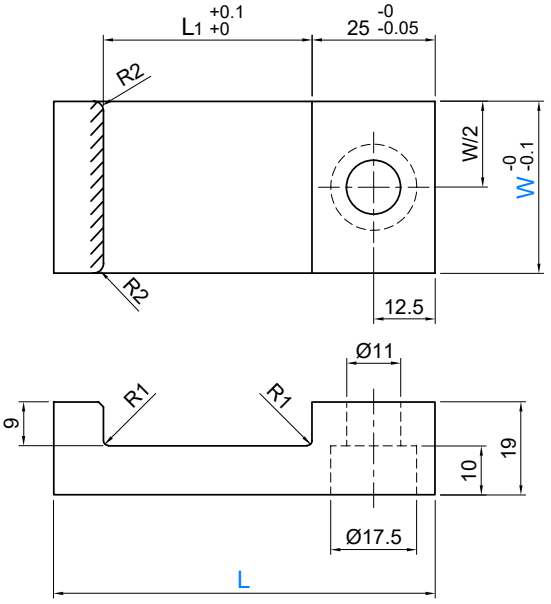

ORDER EXAMPLE: Model W - L → 25CPRIH30-67.5

M S45C

50~60HRC (Induction Harden)

Model	W	L	L1
25CPRIH	30	67.5	32.4
	35	77.5	42.4

Model: 25CPRI



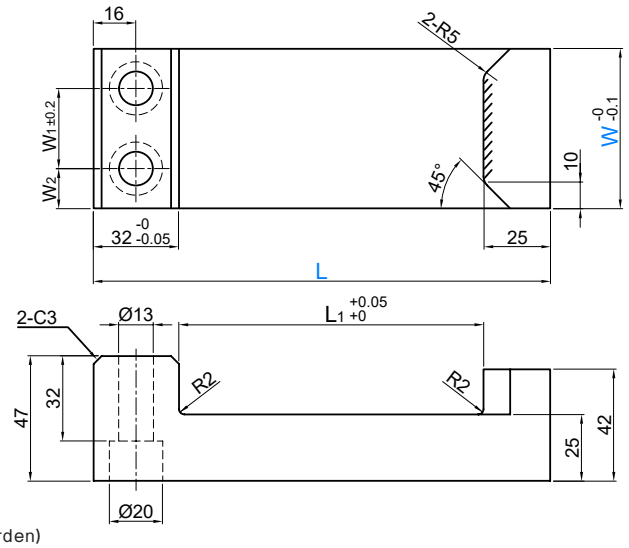

ORDER EXAMPLE: Model W - L → 25CPRI60-191

M S45C

55HRC~(Induction Harden)

Model	W	L	L1	W1	W2
25CPRI	60	171	114	30	15
		191	134		
	80	171	114	40	20
		191	134		

SUN RISE technologies
Tel: +662-324-3184-(89) Fax: +662-324-3190 / +662-324-3103
Website: www.sunrisegr.com Email: sale@sunrisegr.com

CAM Positive Return Follower - แคมโพซิทีฟรีเทอร์น

OIL FREE™

Model: 25CPRIE



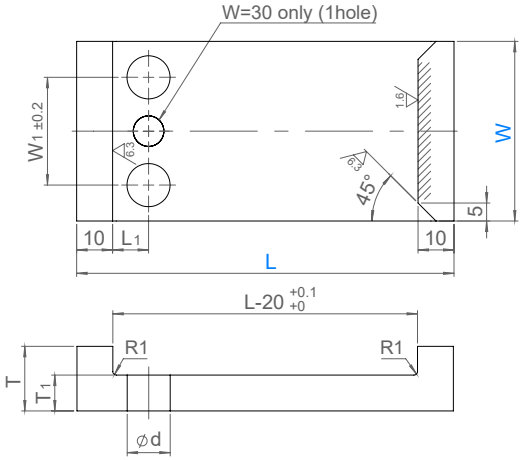

ORDER EXAMPLE: Model W - L | 25CPRIE30-55 | M S45C | 55HRC-(Induction Harden)

Model	W	L	W1	L1	d (Bolt Size)	T	T1	No. Bolt Holes
25CPRIE	30	55	-	7.5	10 (M8)	16	8	1
		75						
	50	65	30	10	12 (M10)	18	10	2
		85						
		105						

CAM Positive Return Follower - แคมโพซิทีฟรีเทอร์น

OIL FREE™

Model: 25CPRIF



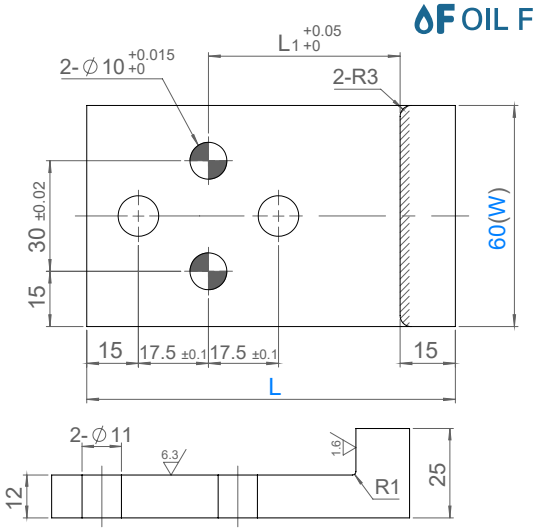

ORDER EXAMPLE: Model W - L | 25CPRIF60-100 | M SK5 | 55HRC-(Induction Harden)

Model	W	L	L1
25CPRIF	60	100	52.5
		120	72.5

ชิ้นส่วนแคมสไลด์

CAM Positive Return Follower - แคมโพซิทีฟรีเทอร์น

OF OIL FREE™

Model: 25CKRZW



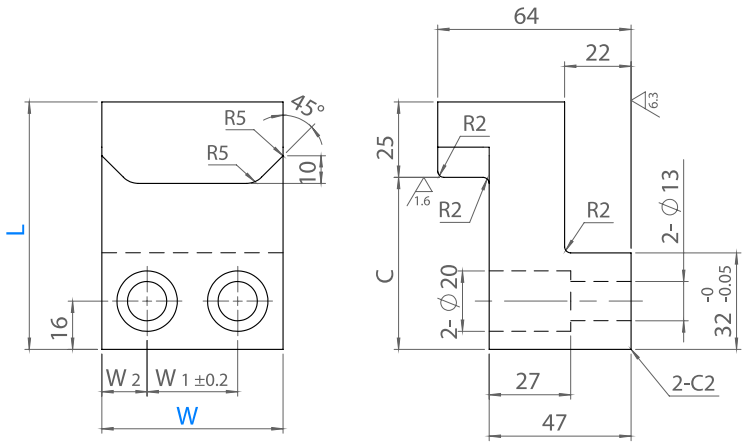

ORDER EXAMPLE Model W - L
25CKRZW60-82

Ⓜ Copper Alloy + Oil Free™ Solid Lubricant

Model	W	L	W1	W2	C
25CKRZW	60	82	30	15	57
		102			77
		112			87
	80	82	40	20	57
		102			77
		112			87

CAM Positive Return Follower - แคมโพซิทีฟรีเทิร์น

OF OIL FREE™

Model: 25CKRLW

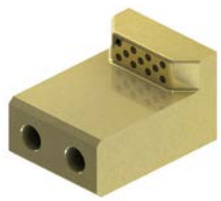

Model: 25CKRLI



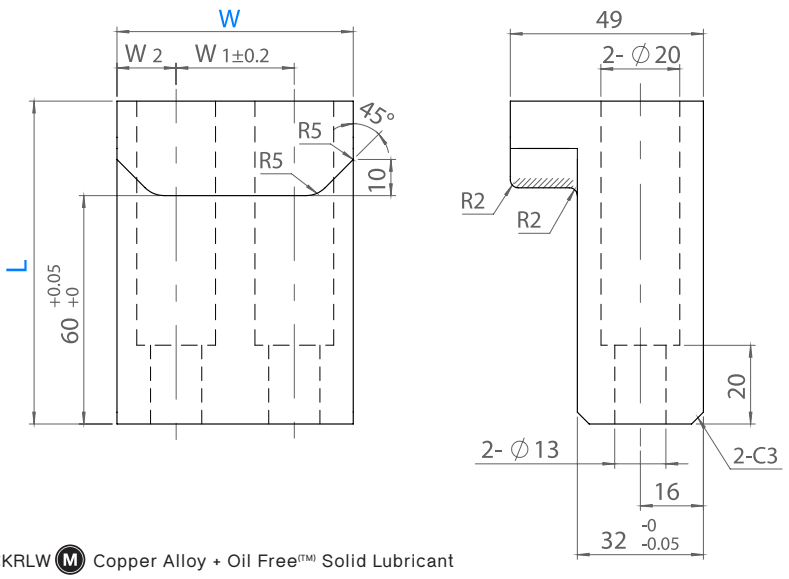

ORDER EXAMPLE Model W - L
25CKRLW60-85

25CKRLW Ⓜ Copper Alloy + Oil Free™ Solid Lubricant

25CKRLI Ⓜ S45C + Oil Free™ Solid Lubricant

55HRC-(Induction Harden)

Model	W	L	W1	W2
25CKRLW 25CKRLI	60	85	30	15
	80		40	20

SUN RISE technologies
Tel: +662-324-3184-(89) Fax: +662-324-3190 / +662-324-3103
Website: www.sunrisegr.com Email: sale@sunrisegr.com

CAM Positive Return Follower - แคมโพซิทีฟรีเทิร์น

OIL FREE™

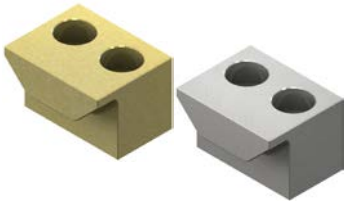

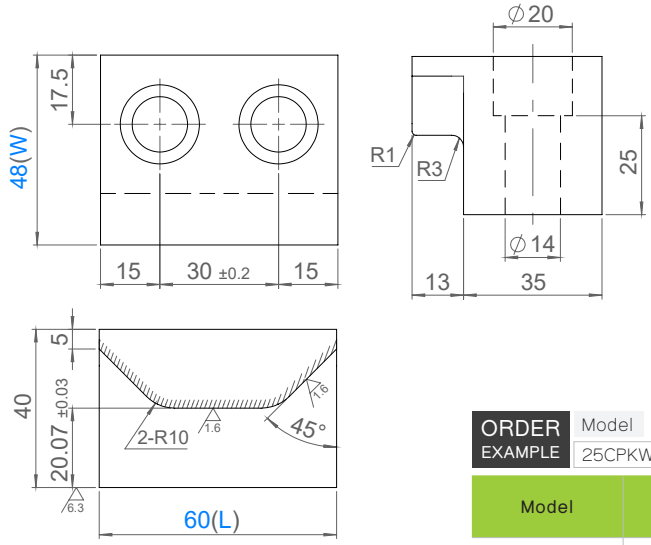

25CPKW (M) Copper Alloy + Oil Free™ Solid Lubricant

25CPKI (M) SS400

25CPKH (M) S45C + Oil Free™ Solid Lubricant

55HRC~(Induction Harden)

ORDER EXAMPLE Model W - L 25CPKW48-60

Model	W	L
25CPKW 25CPKS 25CPKK	48	60

CAM Positive Return Follower - แคมโพซิทีฟรีเทิร์น

OIL FREE™

Model: 25CPBW



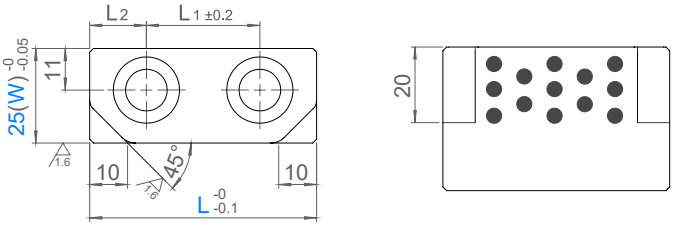

Model: 25CPBWS



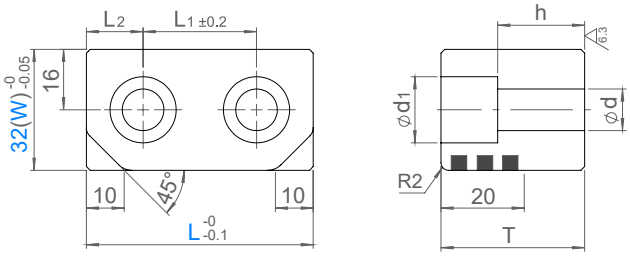

ORDER EXAMPLE Model W - L 25CPBW25-60

25CPBW (M) Copper Alloy + Oil Free™ Solid Lubricant

25CPBWS (M) Copper Alloy

Model	W	L	T	L1	L2	d	d1	h
25CPBW 25CPBWS	25	60	30	30	15	11	17.5	18
	32	60	38	30	15	13	20	23
		80		40	20			

ชิ้นส่วนแคมสไลด์

CAM Positive Return Plate - แคมโพซิทีฟรีเทอร์นเพลท

OF OIL FREE™

Model: 25CRPW

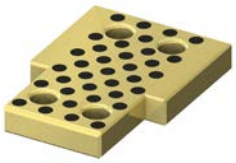

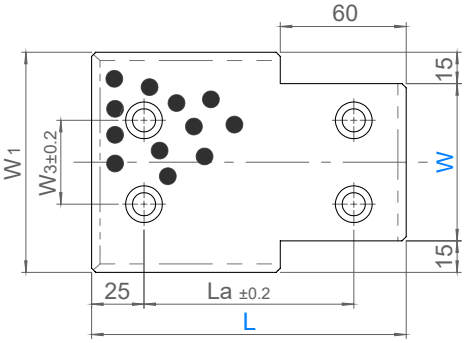

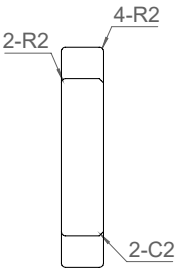

Model: 25CRPWL



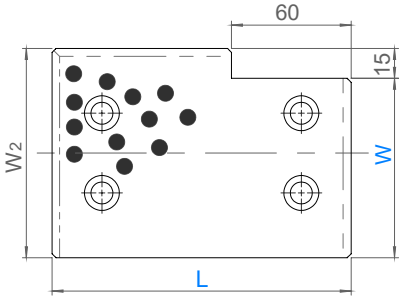

Model: 25CRPWR



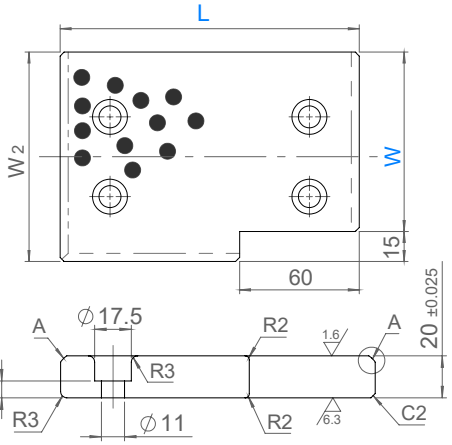

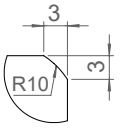

Detial A

ORDER EXAMPLE Model W - L
25CRPW75-100

Ⓜ Copper Alloy + Oil Free™ Solid Lubricant

Model	W	L	W1	W2	W3	La
25CRPW 25CRPWR 25CRPWL	75	100	105	90	40	50
		125				75
		150				100
	100	125	130	115	50	75
		150				100
	125	150	155	140	75	100
		200				150
		250				200
	150	200	180	165	100	150
		250				200

Cam Slides

SUN RISE technologies
Tel: +662-324-3184-(89) Fax: +662-324-3190 / +662-324-3103
Website: www.sunrisegr.com Email: sale@sunrisegr.com

CAM Stopper - ชุดหยุดแคม

OIL FREE™



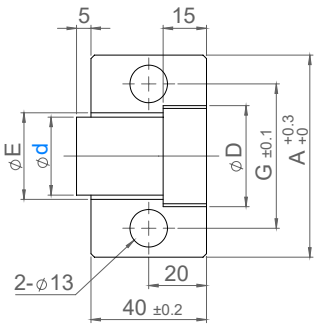

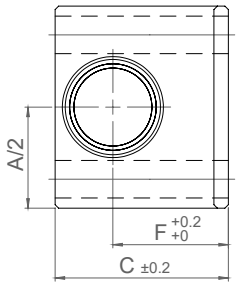

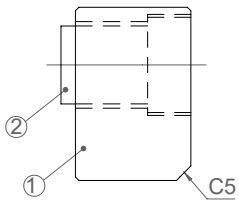

Model: 25CSTA

① Ⓜ SS400
② Urethane
Polyester Based
Hardness : Shore A90

ORDER EXAMPLE Model d 25CSTA27

Model	d	A	C	D	E	F	G	Load N
25CSTA	27	70	60	35	30	40	50	5200
	36	80	70	45	40	45	60	9800



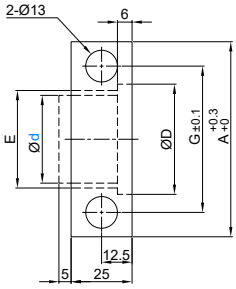

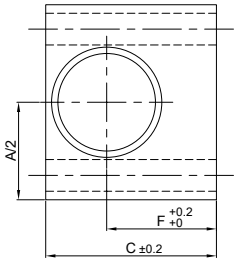

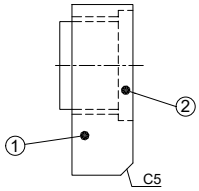

Model: 25CSTU

① Ⓜ SS400
② Urethane
Polyester Based
Hardness : Shore A90

ORDER EXAMPLE Model d 25CSTU27

Model	d	A	C	D	E	F	G	Load N
25CSTU	27	70	60	35.2	30	40	50	2100
	36	80	70	45.2	40	45	60	4200

Cam Slides

Shock Absorbing Stopper - ชุดรับแรงกระแทก

OIL FREE™



Model: 25UCST

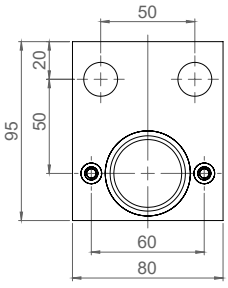

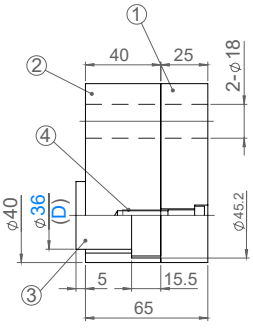

ORDER EXAMPLE Model D 25UCST36

Model	D
25UCST	36

No.	Description	Qty	Material and Remark
①	Set Plate	1	SS400
②	Holder Plate	1	SS400
③	Urethane Support	1	Urethane Shore A90
④	Hexagon Socket Head Bolt	2	SCM435 M6 X 30

ชิ้นส่วนแคมสไลด์

Spring Unit for Cam Return - ชุดสปริงรีเทอร์น

OIL FREE™

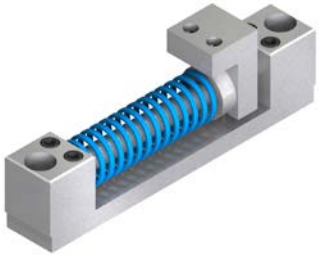

Model:
25TOKSL30

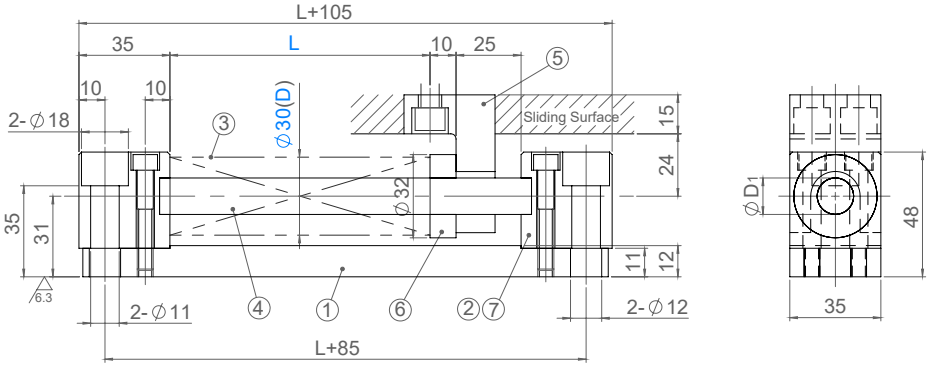

Model:
25TOKSF40
25TOKSL40

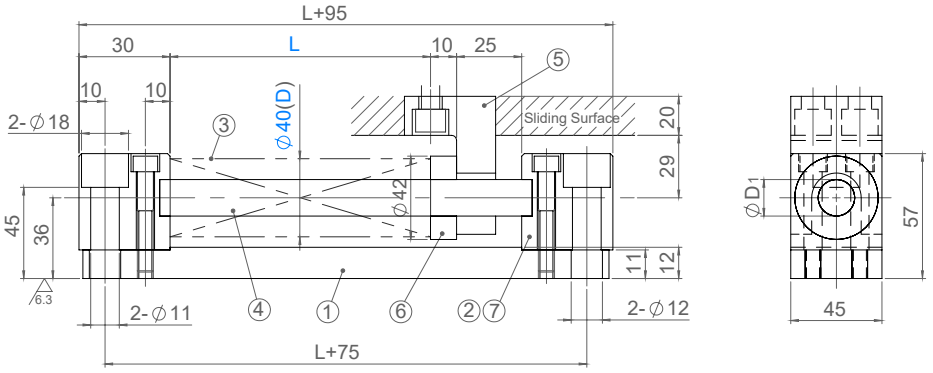

Model:
25TOKSF60
25TOKSL60

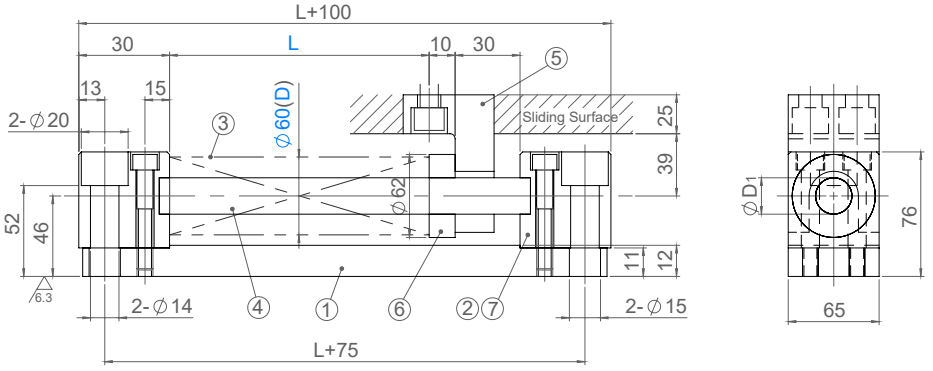

No.	Description	Qty	Material and Remark
①	Base Plate	1	SS400
②	Spring Block	2	SS400
③	Spring	1	19SL / 19SF
④	Spring Guide Pin	1	S45C

No.	Description	Qty	Material and Remark
⑤	Return Plate	1	SS400
⑥	Washer	1	FC250
⑦	Hexagon Socket Head Bolt	4	SCM435

SUN RISE technologies
Tel: +662-324-3184-(89) Fax: +662-324-3190 / +662-324-3103
Website: www.sunrisegr.com Email: sale@sunrisegr.com

Spring Unit for Cam Return - ชุดสปริงรีเทอร์น

OF OIL FREE™

ORDER EXAMPLE Model D - L
25TOKSL40-90

Model	Spring DxL		Spring Color	Spring (1M Strokes)		Spring (300K Strokes)		Spring Constant (N/mm)	D1
	D	L		Stroke	Load N	Stroke	Load N		
25TOKSL	30	100	Blue	32	951	40	1187	29.69	14
		125		40		50		23.76	
		150		48		60		19.80	
		175		56		70		16.97	
25TOKSF	40	90	Yellow	36	1000	45	1255	27.85	20
		125		50		62.5		20.05	
		150		60		75		16.71	
25TOKSL	40	125	Blue	40	1697	50	2120	42.29	19
		150		48		60		35.24	
		175		56		70		30.21	
		200		64		80		26.43	
		250		80		100		21.14	
25TOKSF	60	125	Yellow	50	2260	62.5	2820	45.16	31.8
		150		60		75		37.63	
		175		70		87.5		32.25	
		200		80		100		28.22	
		250		100		125		22.58	
		300		120		150		18.81	
25TOKSL	60	125	Blue	40	3810	50	4770	95.33	28.6
		150		48		60		79.44	
		175		56		70		68.1	
		200		64		80		59.58	
		250		80		100		47.67	
		300		96		120		39.72	

Model: 25TRP

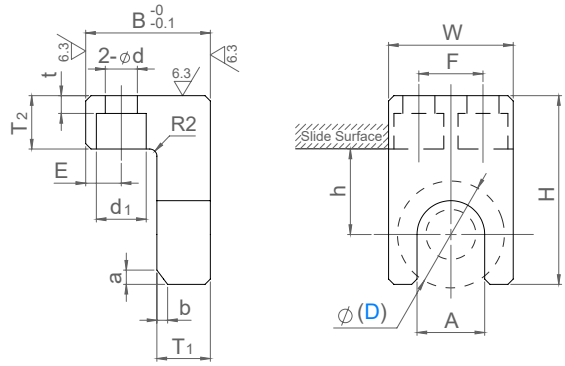

ORDER EXAMPLE Model D
25TRP40

M SS400

Model	D	W	B	H	A	h	T1	T2	F	E	d	d1	a	b	t
25TRP	30	35	35	53	21	24	15	15	18	10	9	14	4	3	5
	40	45	40	69	25	29	15	20	25	10	9	14	5	3	10
	60	65	50	94	37	39	20	25	4	15	13	20	10	5	10

ชิ้นส่วนแคมสไลด์

Spring Unit for Cam Return (Spring 40mm) - ชุดสปริงรีเทอร์น สปริงขนาด 40มม

OIL FREE™

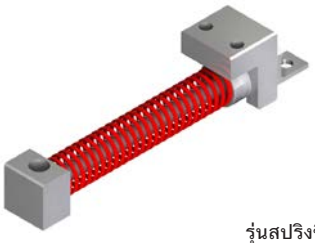

Model: 25SUL40
25SUM40

รุ่นสปริงชิ้นเดียว
One Spring Type

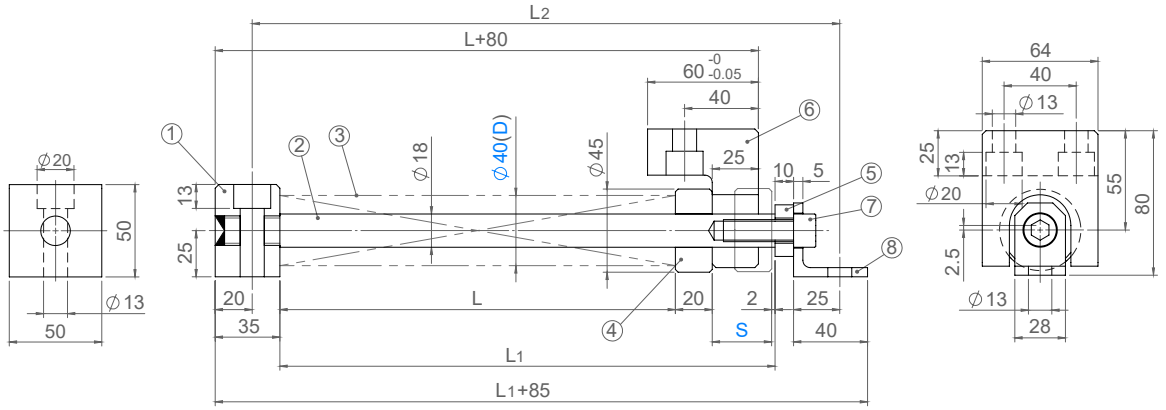

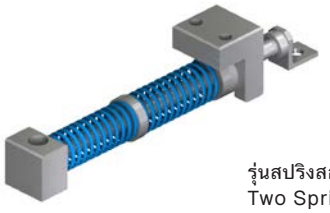

รุ่นสปริงสองชิ้น
Two Spring Type

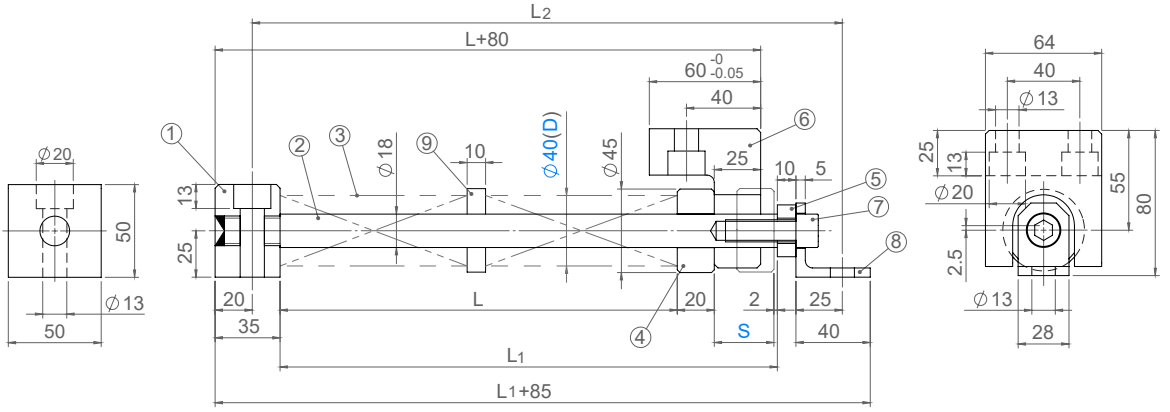

No.	Description	Qty	Material and Remark
①	Spring Block	1	SS400
②	Spring Guide Pin	1	S45C Hardness : HRC55 or more
③	Spring	1(2)	Refer to the standard table
④	Spring Retainer	1	FC250
⑤	Washer	1	SS400

No.	Description	Qty	Material and Remark
⑥	Return Plate	1	SS400
⑦	Hexagon Socket Head Bolt	1	SCM435 M12 X 40
⑧	Angle	1	SS400
⑨	Collar	1	FC250

SUN RISE technologies
Tel: +662-324-3184-(89) Fax: +662-324-3190 / +662-324-3103
Website: www.sunrisegr.com Email: sale@sunrisegr.com

Spring Unit for Cam Return (Spring 40mm) - ชุดสปริงรีเทอร์น สปริงขนาด 40มม

OF OIL FREE™

ORDER EXAMPLE | Model | D - S | 25SUL40-50

Model	D	Stroke S	Spring Size (DiaxLenght)	Spring No.	Spring Color	Load (N)		L	L1	L2
						min	max			
25SUL	40	20	40x100	1	Blue	635	1695	68	110	160
		25	40x125			632		85	132	182
		30	40x150			635		102	154	204
		35	40x150			459		102	159	209
		40	40x175			485		119	181	231
		45	40x200			503		136	203	253
		50	40x250			647		170	242	292
		55	40x250			539		170	247	297
		60	40x150	2		627		214	296	346
		65	40x150			547		214	301	351
		70	40x175			633		248	340	390
		75	40x175			562		248	345	395
		80	40x200			635		282	384	434
		85	40x200			568		282	389	439
		90	40x200			503		282	394	444
		95	40x200			436		282	399	449
		100	40x250			647		350	472	522
		105	40x250			593		350	477	527
		110	40x250			539		350	482	532
25SUM	40	20	40x125	1	Red	940	2510	93	135	185
		25	40x150			914		111	158	208
		30	40x200			1027		149	201	251
		35	40x225			957		168	225	275
		40	40x250			938		186	248	298
		45	40x300			1012		224	291	341
		50	40x175	2		1119		270	342	392
		55	40x175			979		270	347	397
		60	40x200			1027		308	390	440
		65	40x200			905		308	395	445
		70	40x225			1001		344	436	486
		75	40x250			1039		382	479	529
		80	40x250			941		382	484	534

ชิ้นส่วนแคมสไลด์

Spring Unit for Cam Return (Spring 50mm) - ชุดสปริงรีเทอร์น สปริงขนาด 50มม

OIL FREE™

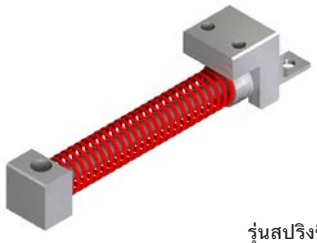

Model: 25SUL50
25SUM50

รุ่นสปริงชิ้นเดียว
One Spring Type

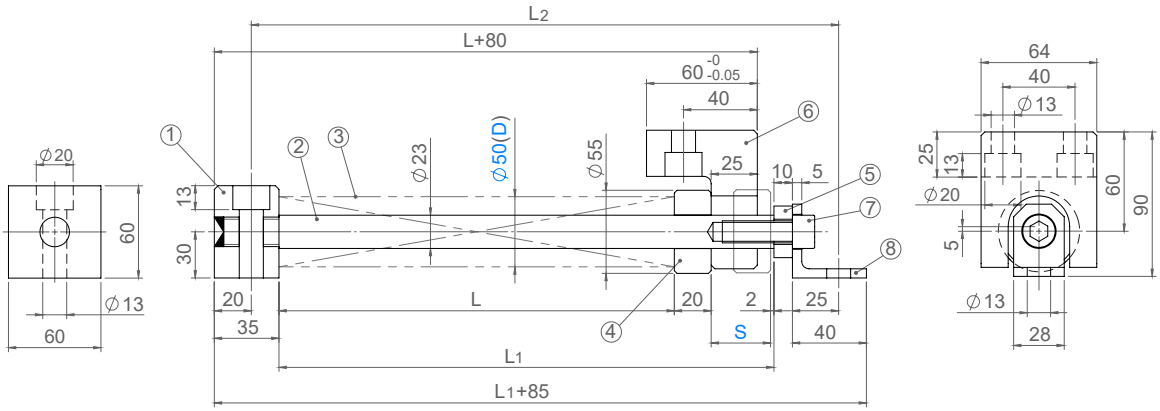

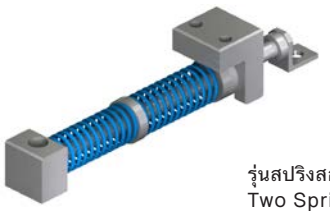

รุ่นสปริงสองชิ้น
Two Spring Type

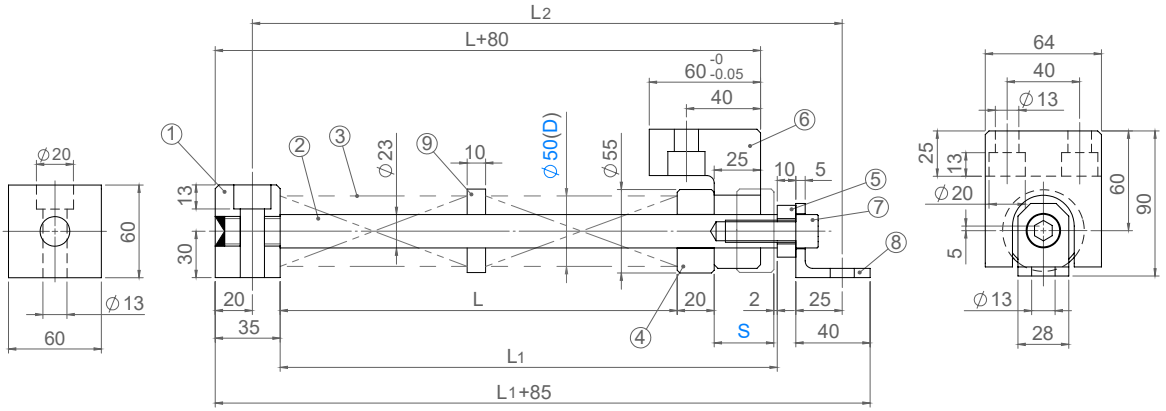

No.	Description	Qty	Material and Remark
①	Spring Block	1	SS400
②	Spring Guide Pin	1	S45C Hardness : HRC55 or more
③	Spring	1(2)	Refer to the standard table
④	Spring Retainer	1	FC250
⑤	Washer	1	SS400

No.	Description	Qty	Material and Remark
⑥	Return Plate	1	SS400
⑦	Hexagon Socket Head Bolt	1	SCM435 M12 X 40
⑧	Angle	1	SS400
⑨	Collar	1	FC250

SUN RISE technologies
Tel: +662-324-3184-(89) Fax: +662-324-3190 / +662-324-3103
Website: www.sunrisegr.com Email: sale@sunrisegr.com

Spring Unit for Cam Return (Spring 50mm) - ชุดสปริงรีเทอร์น สปริงขนาด 50มม

OF OIL FREE™

ORDER EXAMPLE Model D - S
25SUL50-75

Model	D	Stroke S	Spring Size (DiaxLenght)	Spring No.	Spring Color	Load (N)		L	L1	L2
						min	max			
25SUL	50	20	50x100	1	Blue	1020	2700	68	110	160
		25	50x125			1020		85	132	182
		30	50x150			1080		102	154	204
		35	50x150			728		102	159	209
		40	50x175			768		119	181	231
		45	50x200			798		136	203	253
		50	50x250			1020		170	242	292
		55	50x250			850		170	247	297
		60	50x300			1010		214	296	346
		65	50x300			868		214	301	351
		70	50x300			728		248	340	390
		75	50x175	2		888		248	345	395
		80	50x200			1010		282	384	434
		85	50x200			903		282	389	439
		90	50x200			798		282	394	444
		95	50x200			693		282	399	449
		100	50x250			1020		350	472	522
		105	50x250			935		350	477	527
		110	50x250			850		350	482	532
		115	50x250			765		350	487	537
		120	50x300			1010		418	560	610
		125	50x300			938		418	565	615
		130	50x300			868		418	570	620
		135	50x300			798		418	575	625
		140	50x300			728		418	580	630
		145	50x300			658		418	585	635
		150	50x300			588		418	590	640
25SUM	50	20	50x125	1	Red	1470	3920	93	135	185
		25	50x150			1428		111	158	208
		30	50x200			1607		149	201	251
		35	50x225			1496		168	225	275
		40	50x250			1470		186	248	298
		45	50x300			1580		224	291	341
		50	50x350			1705		270	342	392
		55	50x350			1486		270	347	397
		60	50x200	2		1990		308	390	440
		65	50x200			1799		308	395	445
		70	50x225			1904		344	436	486
		75	50x250			1929		382	479	529
		80	50x250			1776		382	484	534

ชิ้นส่วนแคมสไลด์

Spring Unit for Cam Return (Spring 60mm) - ชุดสปริงรีเทอร์น สปริงขนาด 60มม

OF OIL FREE™

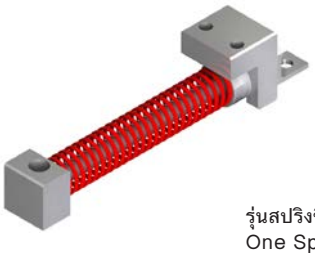

Model: 25SUL60
25SUM60

รุ่นสปริงชิ้นเดียว
One Spring Type

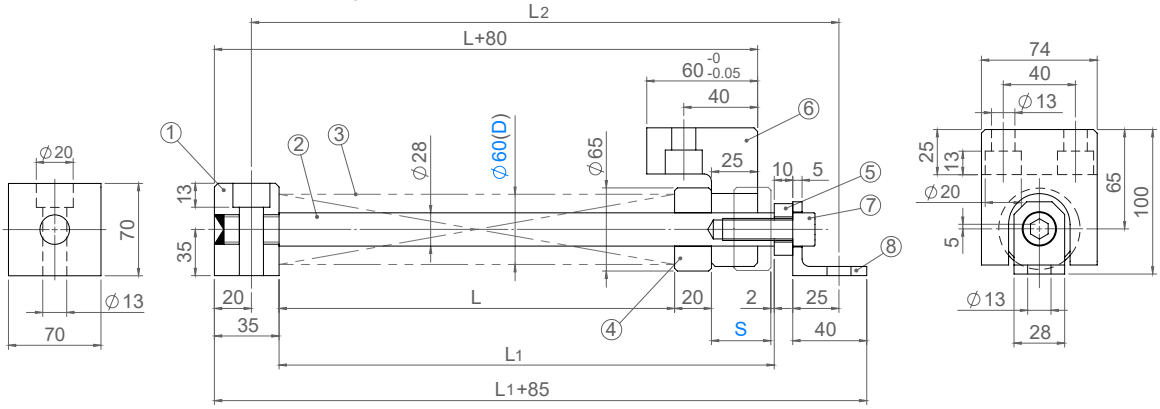

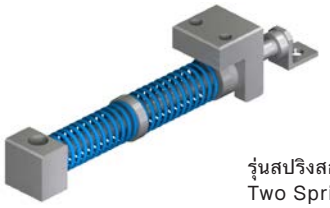

รุ่นสปริงสองชิ้น
Two Spring Type

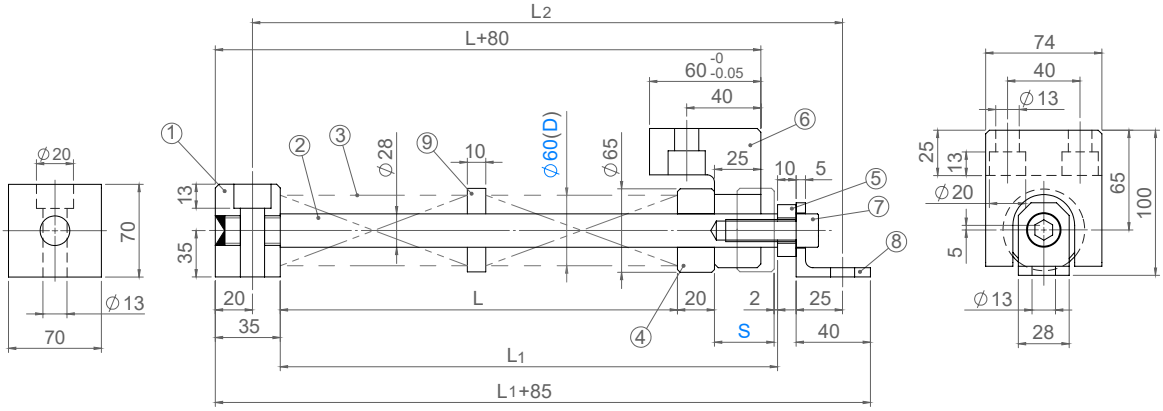

No.	Description	Qty	Material and Remark
①	Spring Block	1	SS400
②	Spring Guide Pin	1	S45C Hardness : HRC55 or more
③	Spring	1(2)	Refer to the standard table
④	Spring Retainer	1	FC250
⑤	Washer	1	SS400

No.	Description	Qty	Material and Remark
⑥	Return Plate	1	SS400
⑦	Hexagon Socket Head Bolt	1	SCM435 M12 X 40
⑧	Angle	1	SS400
⑨	Collar	1	FC250

SUN RISE technologies
Tel: +662-324-3184-(89) Fax: +662-324-3190 / +662-324-3103
Website: www.sunrisegr.com Email: sale@sunrisegr.com

Spring Unit for Cam Return (Spring 60mm) - ชุดสปริงรีเทอร์น สปริงขนาด 60มม

OF OIL FREE™

ORDER EXAMPLE Model D - S
25SUL60-75

Model	D	Stroke S	Spring Size (DiaxLenght)	Spring No.	Spring Color	Load (N)		L	L1	L2
						min	max			
25SUL	60	20	60x100	1	Blue	1464	3890	68	110	160
		25	60x125			1455		85	132	182
		30	60x150			1458		102	154	204
		35	60x150			1053		102	159	209
		40	60x175			1104		119	181	231
		45	60x200			1159		136	203	253
		50	60x250			1470		170	242	292
		55	60x250			1225		170	247	297
		60	60x300			1476		214	296	346
		65	60x300			1271		214	301	351
		70	60x300			1066		248	340	390
		75	60x175	2		1276		248	345	395
		80	60x200			1464		282	384	434
		85	60x200			1331		282	389	439
		90	60x200			1159		282	394	444
		95	60x200			1006		282	399	449
		100	60x250			1470		350	472	522
		105	60x250			1347		350	477	527
		110	60x250			1225		350	482	532
		115	60x250			1103		350	487	537
		120	60x300			1476		418	560	610
		125	60x300			1373		418	565	615
		130	60x300			1271		418	570	620
		135	60x300			1168		418	575	625
		140	60x300			1066		418	580	630
		145	60x300			963		418	585	635
		150	60x300			861		418	590	640
25SUM	60	20	60x125	1	Red	2116	5640	93	135	185
		25	60x150			2057		111	158	208
		30	60x200			2313		149	201	251
		35	60x225			2154		168	225	275
		40	60x250			2116		186	248	298
		45	60x300			2275		224	291	341
		50	60x350			2454		261	333	383
		55	60x350			2139		261	338	388
		60	60x200	2		2864		298	380	430
		65	60x200			2589		298	385	435
		70	60x225			2741		334	426	476
		75	60x250			2775		372	469	519
		80	60x250			2555		372	474	524

ชิ้นส่วนแคมสไลด์

Double Spring Unit for Cam Return (Spring 50mm) - ชุดสปริงรีเทอร์นคู่ สปริงขนาด 50มม

OIL FREE™

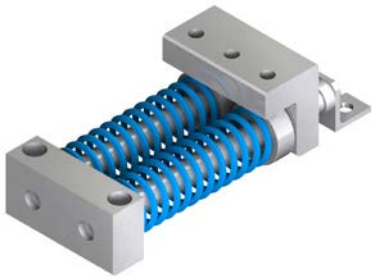

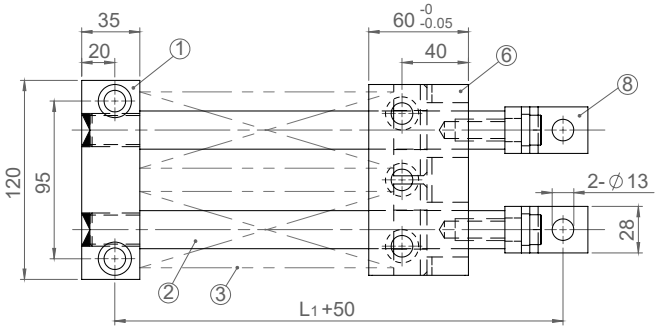

Model:
25SWUL50 (สีฟ้า Light Load)
25SWUM50 (สีแดง Medium Load)

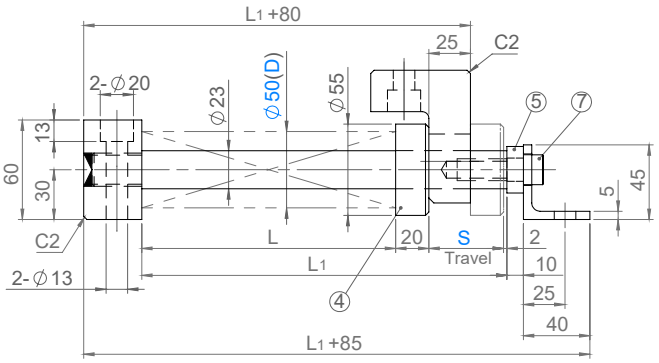

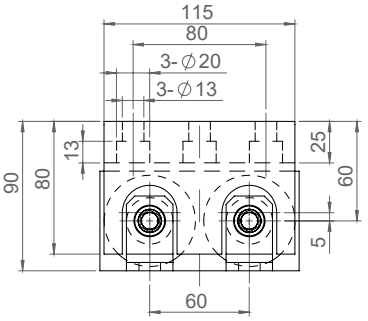

No.	Description	Qty	Material and Remark
①	Spring Block	1	SS400
②	Spring Guide Pin	2	S45C HRC55 ~
③	Spring	2(4)	standard table
④	Spring Retainer	2	FC250

No.	Description	Qty	Material and Remark
⑤	Washer	2	SS400
⑥	Return Plate	1	SS400
⑦	Hexagon Socket Bolt	2	SCM435 M12 X 40
⑧	Angle	2	SS400

ORDER EXAMPLE: Model D - S → 25SWUL50-50

Model	D	Stroke S	Spring Color	L	L1	Spring Size (DiaxLenght)	Spring No.	Spring Load (N) initial	Spring Load (N) end
25SWUL	50	20	Blue	68	110	50x100	2	2040	5400
		25		85	132	50x125		2040	
		30		102	154	50x150		2160	
		35			159	50x150		1456	
		40		119	181	50x175		1536	
		45		136	203	50x200		1596	
		50		170	242	50x250		2040	
		55			247	50x250		1700	
		60		204	286	50x300		2020	
		65			291	50x300		1736	
		70			296	50x300		1456	
25SWUM	50	20	Red	93	135	50x125	2	2940	7840
		25		111	158	50x150		2857	
		30		149	201	50x200		3215	
		35		168	225	50x225		2993	
		40		186	248	50x250		2940	
		45		224	291	50x300		3160	
		50		261	333	50x350		3409	
		55			338	50x350		2972	
		60		298	380	50x200	4	3980	
		65			385	50x200		3597	
		70		334	426	50x225		3809	

SUN RISE technologies
Tel: +662-324-3184-(89) Fax: +662-324-3190 / +662-324-3103
Website: www.sunrisegr.com Email: sale@sunrisegr.com

Double Spring Unit for Cam Return (Spring 60mm) - ชุดสปริงรีเทอร์นคู่ สปริงขนาด 60มม

OIL FREE™

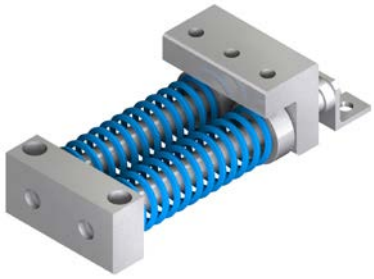

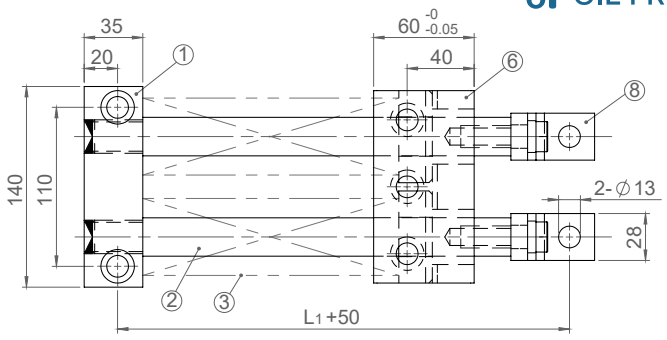

Model:
25SWUL60 (สีฟ้า Light Load)
25SWUM60 (สีแดง Medium Load)

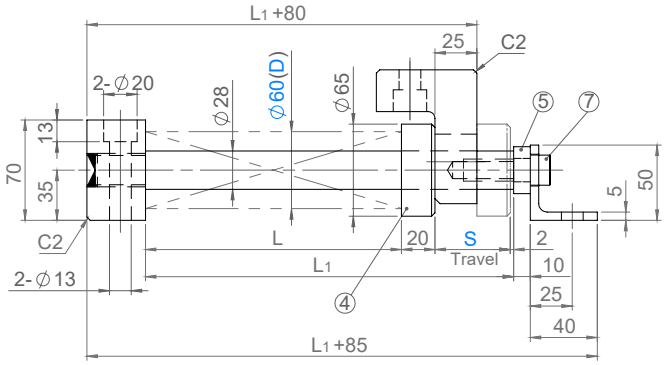

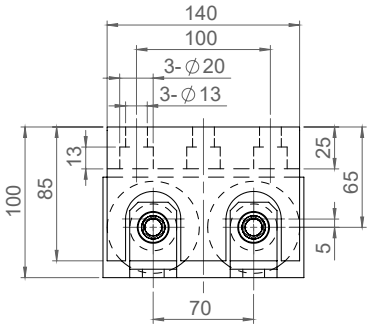

No.	Description	Qty	Material and Remark
①	Spring Block	1	SS400
②	Spring Guide Pin	2	S45C HRC55 -
③	Spring	2(4)	standard table
④	Spring Retainer	2	FC250

No.	Description	Qty	Material and Remark
⑤	Washer	2	SS400
⑥	Return Plate	1	SS400
⑦	Hexagon Socket Bolt	2	SCM435 M12 X 40
⑧	Angle	2	SS400

ORDER EXAMPLE: Model D - S → 25SWUL60-50

Model	D	Stroke S	Spring Color	L	L1	Spring Size (DiaxLenght)	Spring No.	Spring Load (N) initial	Spring Load (N) end
25SWUL	60	20	Blue	68	110	60x100	2	2928	7780
		25		85	132	60x125		2910	
		30		102	154	60x150		2916	
		35			159	60x150		2106	
		40		119	181	60x175		2208	
		45		136	203	60x200		2318	
		50		170	242	60x250		2940	
		55			247	60x250		2450	
		60		204	286	60x300		2952	
		65			291	60x300		2542	
		70			296	60x300		2132	
25SWUM	60	20	Red	93	135	60x125	2	4231	11280
		25		111	158	60x150		4113	
		30		149	201	60x200		4626	
		35		168	225	60x225		4308	
		40		186	248	60x250		4229	
		45		224	291	60x300		4551	
		50		261	333	60x350		4907	
		55			338	60x350		4278	
		60		298	380	60x200	4	5728	
		65			385	60x200		5177	
		70		334	426	60x225		5483	

ชิ้นส่วนแคมสไลด์

CAM Return Units - ชุดรีเทอร์นของแคม

OIL FREE™



Model: 25SUKI (ชุดเต็ม Complete Set)

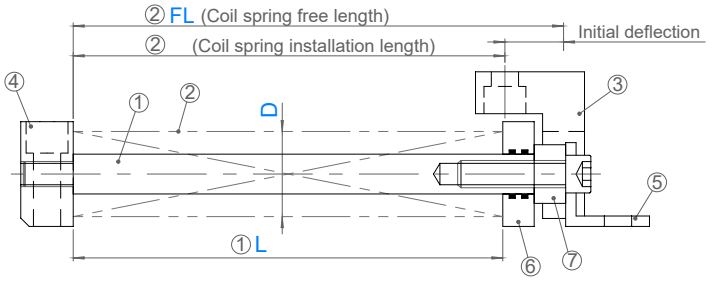



Model: 25SUKS (with Slide Angle)

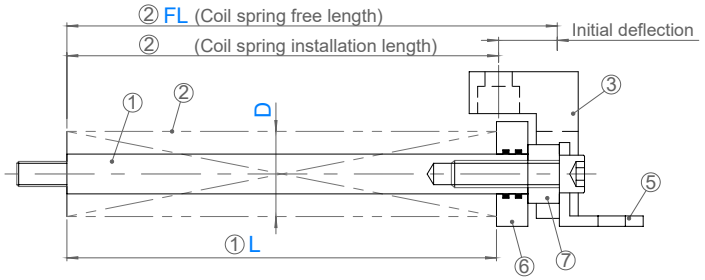



Model: 25SUKA (with Fixed Plate)

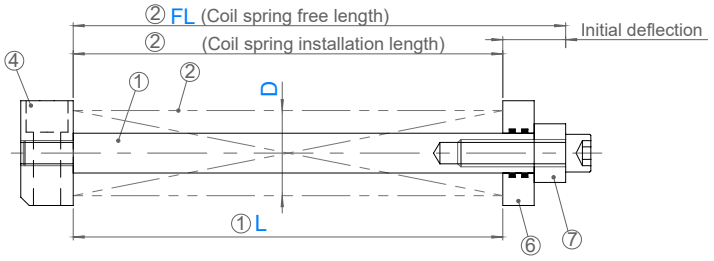

① Ⓜ Guide Pin
S45C
50HRC~
(Induction Harden)

② Coil Spring

③ Ⓜ Slide Angle
SS400

④ Ⓜ Fixed Plate
SS400
Hex Socket Head Bolt

⑤ Ⓜ Support Angle
SS400

⑥ Ⓜ Separate Disk
FC250
Oil Free™ Solid Lubricant

⑦ Ⓜ Pressure Disk
SS400

ข้อมูลขนาดอื่นๆในหน้าถัดไป
Other dimensions in next page

ORDER EXAMPLE Model D - Spring Type - FL - L
25SUKI60-F-150-L140

ความยาว FL 400 ขึ้นไปมีเฉพาะสปริงแบบ F เท่านั้น
FL 400 and over only available for Spring Type F

D	Spring Type	FL	L (1mm increments)										
			FL 90	FL 100	FL 125	FL 150	FL 175	FL 200	FL 250	FL 300	FL 350	FL *400	FL *450	FL *500
40	F (Yellow) L (Blue)	90 100 125 150 175 200 250	68 - 90	80 - 100	90 - 125	105 - 150	130 - 175	145 - 200	195 - 250	-	-	-	-	-
50					95 - 125	110 - 150	120 - 175	135 - 200	185 - 250	225 - 300	275 - 350	325 - 400	375 - 450	425 - 500
60														
70												-	-	-
40	M (Red) H (Green)	300 350 400 450 500	68 - 90	80 - 100	90 - 125	105 - 150	130 - 175	145 - 200	195 - 250	-	-			
50					95 - 125	110 - 150	120 - 175	135 - 200	185 - 250	225 - 300	275 - 350			
60														

SUN RISE technologies
Tel: +662-324-3184-(89) Fax: +662-324-3190 / +662-324-3103
Website: www.sunrisegr.com Email: sale@sunrisegr.com

CAM Return Units - ชุดรีเทอร์นของแคม

OF OIL FREE™

D	① Guide Pin					③ Slide Angle									④ Fixed Plate					⑤ Support Angle			
	D1	D2	D3	MxP	ℓ	H	h	W	B	P	T	t1	t2	P1	T1	A	P2	H1	t3	a	H2	h1	d
40	19	50	28	12x1.75	24	70	25	60	33	30	50	20	20	35	25	55	30	50	15	27	40	25	19
50	24	60	36	16x2.0	28	85	30	70	41	40	60	25	25	40	32	60	35	60	20	35	48	30	25
60	29	70	43			95	35	80	48	50						70	40	70	30	42	56	35	
70	35	80	48	20x2.5	33	97	27	90	54	50	63	28	28	43	35	80	45	80	30	43	65	40	31

③ Model: 25SUKSA (Slide Angle)

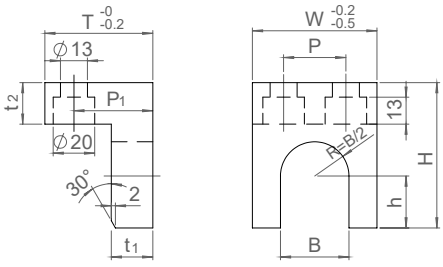

④ Model: 25SUKFP (Fixed Plate)

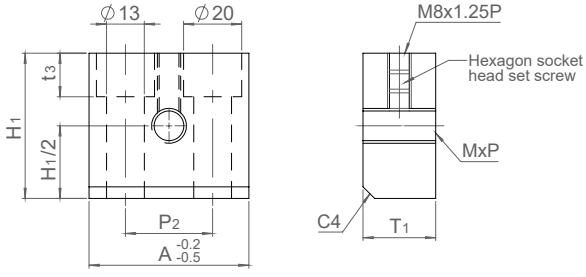

⑤ Model: 25SUKFA (Support Angle)

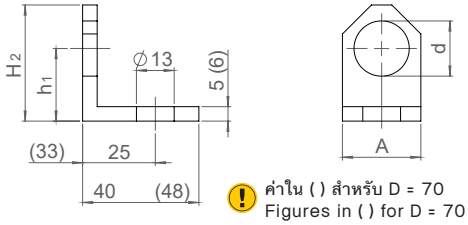

ค่าใน ( ) สำหรับ D = 70
Figures in ( ) for D = 70

ORDER EXAMPLE Model D
25SUKSA50

Model	D	Spring OD
25SUKSA 25SUKFP 25SUKFA	40	40
	50	50
	60	60
	70	70

Cam Slides

สปริงแม่พิมพ์
DIE SPRINGS

Name	Ultra High Deflection	Super High Deflection	High Deflection	Medium Deflection	Lightest Load	Light Load	Medium Load
							
Model	19SSY	19SSU	19SSR	19SSS	19SF	19SL	19SM
Page	273-274	275-276	277-278	279	280-284	285-290	291-296

Name	Heavy Load	Extra Heavy Load	Super Heavy Load	Spring Guide Unit	Spring Guide Flange	Spring Guide Pins	Spring Guide Retainers
							
Model	19SH	19SB	19SG	25SUK	25WUNT	25SGA	25SGR
Page	297-302	303-307	308-311	312-313	314	314	315-316

ข้อควรระวังในการใช้สปริง | Spring Usage Precautions

OIL FREE™ CORE

- ควรใช้ร่วมกับสปริงไกด์ เพื่อยืดอายุการใช้งานสปริง และลดอุบัติเหตุจากการทำงาน
  Use with Spring Guide to increase spring life time and reduce accident
- ขนาดของแกนไกด์ควรเล็กกว่าค่ารูในของสปริง 1มม (d - 1)
  Guide diameter should be 1mm smaller than spring inside diameter (d - 1)
- ขนาดของช่องสวมสปริงควรโตกว่าค่าโตนอกของสปริง 1.5มม (D + 1)
  Spring housing should be 1.5mm larger than the spring outer diamter (D + 1)
- ความยาวไกด์ขั้นต่ำอยู่ที่ 150% ของความสูงเริ่มต้น และแกนไกด์ควรทำแชมเฟอร์ที่ระดับ C3
  Guide length minimum at 150% of initial set height, and should be C3 chamfer
- กำหนดค่ายุบตัวเริ่มต้น เพื่อรักษาสภาพส่วนหัวและท้ายของสปริง
  Setting an initial deflection to stabilize the top and bottom ends of the spring
- สปริงแต่ละตัวควรวางในตำแหน่งของดายที่ขนาดกัน
  The mounting surface of springs should be sufficient parallel
- ไม่ควรใช้สปริงเกินค่าขีดจำกัด
  Do not use spring over their allow limits
- ไม่ควรใช้งานเมื่อมีสิ่งแปลกปลอมเข้าไปติดค้างในสปริง
  Do not use when foreign objects are caught in the spring
- ไม่ควรนำสปริงมาต่อกันด้านหัวท้าย ควรเลือกความยาวที่ถูกต้องหรือสอบถามเพื่อสั่งทำขนาดพิเศษ
  Do not stack springs to increase length, choose the right length or ask for customize length
- ไม่ควรนำสปริงมาซ้อนกันสองชั้น (ตัวเล็กในตัวใหญ่)
  Do not use spring inside another spring
- ไม่ควรใช้สปริงในแนวนอน
  Do not use spring horizontally

SUN RISE technologies
Tel: +662-324-3184-(89) Fax: +662-324-3190 / +662-324-3103
Website: www.sunrisegr.com Email: sale@sunrisegr.com

ตารางการเลือกสปริง
Spring Selection Chart

Spring Load Chart

Light ← → Heavy

Type		Model	Color	Outer Diameter		Free Length		1,000,000 Free Length %	Load N (kgf)	
				Min	Max	Min	Max		Min	Max
Ultra High Deflection		19SSY	Light Green	Ø11	Ø42	20	300	65.0%	29.4 (3.0)	392.3 (40.0)
Super High Deflection		19SSU	Light Blue	Ø10.5	Ø43	15	300	60.0%	68.6 (7.0)	588.4 (60.0)
High Deflection		19SSR	Ivory White	Ø10.5	Ø46	15	300	50.0%	127.5 (13)	3579.4 (110)
Medium Deflection		19SSS	Orange	Ø10.5	Ø46	30	300	40.0%	976.15 (30)	4230.2 (130)
Lightest Load		19SF	Yellow	Ø6	Ø70	10	500	40.0%	58.8 (6)	2255.5 (230)
Light Load		19SL	Dark Blue	Ø6	Ø70	10	500	32.0%	78.5 (8)	3814.4 (389)
Medium Load		19SM	Red	Ø6	Ø70	10	350	25.6%	107.9 (11)	5638.8 (525)
Heavy Load		19SH	Dark Green	Ø6	Ø70	10	350	19.2%	166.7 (17)	8472.9 (864)
Extra Heavy Load		19SB	Brown	Ø6	Ø70	10	350	16.0%	255.0 (26)	11297.3 (152)
Super Heavy Load		19SG	Grey	Ø10	Ø50	15	300	16.0%	392.3 (40)	10101.2 (1040)

Spring Tolerance

Outer Dia	Inner Dia	Free Length		Load (kgf)	Coil Direction
		< 50mm	> 55mm		
+ 0mm - 0mm	+ 0.7mm - 0.1mm	±0.5mm	±1%	±10%	Right

วิธีคำนวนค่ารับแรงกดของสปริง
Spring force calculation

Force = Spring Constant x Deflection
N = N/mm x Deflection
kgf = kgf/mm x Deflection

Ultra-High Deflection Spring - สปริงยุบตัวได้สูงมากพิเศษ

OIL FREE™ ACORE



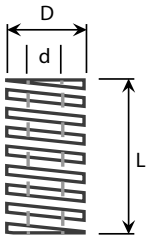

สปริงสีเขียวอ่อน
Light Green Spring
Model: 19SSY

Spring Load Chart

Light ← → Heavy

แรงกด Load	±10%
ความได้ฉาก Perpendicularity	3° or less
ระยะเผื่อความยาว Free Length	≤ 50 ±0.5mm ≥ 55 ±1.5%

ORDER EXAMPLE: Model D - L → 19SSY12.5-050

M SAE9245

i JIS Standard

D	L	d	Solid Length	Spring Constant N/mm (kgf/mm)	1,000,000 times 65% Deflection	1,000,000 times Load N (kgf)
11	20	7	5.0	2.26 (0.23)	13.0	29.4 (3.0)
	25		6.3	1.81 (0.18)	16.3	
	30		7.5	1.51 (0.15)	19.5	
	35		8.8	1.29 (0.13)	22.8	
	40		10.0	1.13 (0.12)	26.0	
	45		11.3	1.01 (0.10)	29.3	
	50		12.5	0.91 (0.092)	32.5	
	55		13.8	0.82 (0.084)	35.8	
	60		15.0	0.75 (0.077)	39.0	
	65		16.3	0.70 (0.071)	42.3	
	70		17.5	0.65 (0.066)	45.5	
	75		18.8	0.60 (0.061)	48.8	
	80		20.0	0.57 (0.058)	52.0	
	90		22.5	0.50 (0.051)	58.8	
	100		25.0	0.45 (0.046)	65.0	
12.5	20	6.5	5.0	3.09 (0.32)	13.0	40.2 (4.1)
	25		6.3	2.47 (0.25)	16.3	
	30		7.5	2.06 (0.21)	19.5	
	35		8.8	1.77 (0.18)	22.8	
	40		10.0	1.55 (0.16)	26.0	
	45		11.3	1.37 (0.14)	29.3	
	50		12.5	1.24 (0.13)	32.5	
	55		13.8	1.12 (0.11)	35.8	
	60		15.0	1.03 (0.11)	39.0	
	65		16.3	0.95 (0.10)	42.3	
	70		17.5	0.88 (0.090)	45.5	
	75		18.8	0.82 (0.084)	48.8	
	80		20.0	0.77 (0.079)	52.0	
	90		22.5	0.69 (0.070)	58.5	
	100		25.0	0.62 (0.063)	65.0	
	110		27.5	0.56 (0.057)	71.5	
	120		30.0	0.52 (0.053)	78.0	
	125		31.3	0.49 (0.050)	81.3	

D	L	d	Solid Length	Spring Constant N/mm (kgf/mm)	1,000,000 times 65% Deflection	1,000,000 times Load N (kgf)
16.5	20	10.5	5.0	7.02 (0.72)	13.0	91.2 (9.3)
	25		6.3	5.61 (0.57)	16.3	
	30		7.5	4.68 (0.48)	19.5	
	35		8.8	4.01 (0.41)	22.8	
	40		10.0	3.51 (0.36)	26.0	
	45		11.3	3.12 (0.32)	29.3	
	50		12.5	2.81 (0.29)	32.5	
	55		13.8	2.55 (0.26)	35.8	
	60		15.0	2.34 (0.24)	39.0	
	65		16.3	2.16 (0.22)	42.3	
	70		17.5	2.00 (0.20)	45.5	
	75		18.8	1.87 (0.19)	48.8	
	80		20.0	1.75 (0.18)	52.0	
	90		22.5	1.56 (0.16)	58.5	
	100		25.0	1.40 (0.14)	65.0	
	110		27.5	1.28 (0.13)	71.5	
	120		30.0	1.17 (0.12)	78.0	
	125		31.3	1.12 (0.11)	81.3	
	150		37.5	0.94 (0.10)	97.5	
20.5	30	13.5	7.5	5.58 (0.57)	19.5	108.9 (11.1)
	35		8.8	4.78 (0.49)	22.8	
	40		10.0	4.19 (0.43)	26.0	
	45		11.3	3.72 (0.38)	29.3	
	50		12.5	3.35 (0.34)	32.5	
	55		13.8	3.04 (0.31)	35.8	
	60		15.0	2.79 (0.28)	39.0	
	65		16.3	2.58 (0.26)	42.3	
	70		17.5	2.39 (0.24)	45.5	
	75		18.8	2.23 (0.23)	48.8	
	80		20.0	2.09 (0.21)	52.0	
	90		22.5	1.86 (0.19)	58.5	
	100		25.0	1.67 (0.17)	65.0	
	110		27.5	1.52 (0.16)	71.5	
	120		30.0	1.40 (0.14)	78.0	
	125		31.3	1.34 (0.14)	81.3	
	130		32.5	1.29 (0.13)	84.5	
	140		35.0	1.20 (0.12)	91.0	
	150		37.5	1.12 (0.11)	97.5	

SUN RISE technologies
Tel: +662-324-3184-(89) Fax: +662-324-3190 / +662-324-3103
Website: www.sunrisegr.com Email: sale@sunrisegr.com

Ultra-High Deflection Spring - สปริงยุบตัวได้สูงมากพิเศษ

ORDER EXAMPLE | Model D - L | 19SSY12.5-050

สปริงสีเขียวอ่อน
Light Green Spring
Model: 19SSY

Spring Load Chart

Light ← → Heavy

OIL FREE™ ACORE

D	L	d	Solid Length	Spring Constant N/mm (kgf/mm)	1,000,000 times	
					65% Deflection	Load N (kgf)
24.5	30	16.5	7.5	6.99 (0.71)	19.5	136.3 (13.9)
	35		8.8	5.99 (0.61)	22.8	
	40		10.0	5.24 (0.53)	26.0	
	45		11.3	4.66 (0.48)	29.3	
	50		12.5	4.19 (0.43)	32.5	
	55		13.8	3.81 (0.39)	35.8	
	60		15.0	3.50 (0.36)	39.0	
	65		16.3	3.23 (0.33)	42.3	
	70		17.5	3.00 (0.31)	45.5	
	75		18.8	2.80 (0.29)	48.8	
	80		20.0	2.62 (0.27)	52.0	
	90		22.5	2.33 (0.24)	58.5	
	100		25.0	2.10 (0.21)	65.0	
	110		27.5	1.91 (0.19)	71.5	
	120		30.0	1.75 (0.18)	78.0	
	125		31.3	1.68 (0.17)	81.3	
	130		32.5	1.61 (0.16)	84.5	
	140		35.0	1.50 (0.15)	91.0	
	150		37.5	1.40 (0.14)	97.5	
	175		43.8	1.20 (0.12)	113.8	
	200		50.0	1.05 (0.11)	130.0	
30	35	21	8.8	8.79 (0.90)	22.8	200.1 (20.4)
	40		10.0	7.69 (0.78)	26.0	
	45		11.3	6.84 (0.70)	29.3	
	50		12.5	6.16 (0.63)	32.5	
	55		13.8	5.60 (0.57)	35.8	
	60		15.0	5.13 (0.52)	39.0	
	65		16.3	4.74 (0.48)	42.3	
	70		17.5	4.40 (0.45)	45.5	
	75		18.8	4.10 (0.42)	48.8	
	80		20.0	3.85 (0.39)	52.0	
	90		22.5	3.42 (0.35)	58.5	
	100		25.0	3.08 (0.31)	65.0	
	110		27.5	2.80 (0.29)	71.5	
	120		30.0	2.56 (0.26)	78.0	
	125		31.3	2.46 (0.25)	81.3	
	130		32.5	2.37 (0.24)	84.5	
	140		35.0	2.20 (0.22)	91.0	
	150		37.5	2.05 (0.21)	97.5	
	160		40.0	1.92 (0.20)	104.0	
	170		42.5	1.81 (0.18)	110.5	
	175		43.8	1.76 (0.18)	113.8	
	180		45.0	1.71 (0.17)	117.0	
	190		47.5	1.62 (0.17)	123.5	
	200		50.0	1.54 (0.16)	130.0	
	250		62.5	1.23 (0.13)	162.5	
	300		75.0	1.03 (0.10)	195.0	

D	L	d	Solid Length	Spring Constant N/mm (kgf/mm)	1,000,000 times	
					65% Deflection	Load N (kgf)
37	40	26	10.0	11.32 (1.15)	26.0	294.2 (30.0)
	45		11.3	10.06 (1.03)	29.3	
	50		12.5	9.05 (0.92)	32.5	
	55		13.8	8.23 (0.84)	35.8	
	60		15.0	7.54 (0.77)	39.0	
	65		16.3	6.96 (0.71)	42.3	
	70		17.5	6.47 (0.66)	45.5	
	75		18.8	6.03 (0.62)	48.8	
	80		20.0	5.66 (0.58)	52.0	
	90		22.5	5.03 (0.51)	58.5	
	100		25.0	4.53 (0.46)	65.0	
	110		27.5	4.11 (0.42)	71.5	
	120		30.0	3.77 (0.38)	78.0	
	130		32.5	3.48 (0.36)	84.5	
	140		35.0	3.23 (0.33)	91.0	
	150		37.5	3.02 (0.31)	97.5	
	160		40.0	2.83 (0.29)	104.0	
	170		42.5	2.66 (0.27)	110.5	
	180		45.0	2.51 (0.26)	117.0	
	190		47.5	2.38 (0.24)	123.5	
	200		50.0	2.26 (0.23)	130.0	
	225		56.3	2.01 (0.21)	146.3	
	250		62.5	1.81 (0.18)	162.5	
	275		68.8	1.65 (0.17)	178.8	
	300		75.0	1.51 (0.15)	195.0	
42	50	31	12.5	12.07 (1.23)	32.5	392.3 (40.0)
	60		15.0	10.06 (1.03)	39.0	
	70		17.5	8.62 (0.88)	45.5	
	80		20.0	7.54 (0.77)	52.0	
	90		22.5	6.71 (0.68)	58.5	
	100		25.0	6.03 (0.62)	65.0	
	110		27.5	5.49 (0.56)	71.5	
	120		30.0	5.03 (0.51)	78.0	
	130		32.5	4.64 (0.47)	84.5	
	140		35.0	4.31 (0.44)	91.0	
	150		37.5	4.02 (0.41)	97.5	
	160		40.0	3.77 (0.38)	104.0	
	170		42.5	3.55 (0.36)	110.5	
	180		45.0	3.35 (0.34)	117.0	
	190		47.5	3.18 (0.32)	123.5	
	200		50.0	3.02 (0.31)	130.0	
	225		56.3	2.68 (0.27)	146.3	
	250		62.5	2.41 (0.25)	162.5	
	275		68.8	2.19 (0.22)	178.8	
	300		75.0	2.01 (0.21)	195.0	

Super-High Deflection Spring - สปริงยุบตัวได้สูงมาก



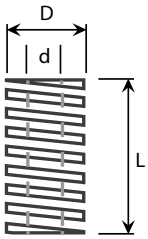

สปริงสีฟ้าอ่อน
Light Blue Spring
Model: 19SSU

OIL FREE™ CORE

Spring Load Chart

Light ← → Heavy

แรงกด Load	±10%
ความได้ฉาก Perpendicularity	3° or less
ระยะเผื่อความยาว Free Length	≤ 50 ±0.5mm ≥ 55 ±1.5%

ORDER EXAMPLE | Model | D - L | 19SSU12.5-050

SAE9245

JIS Standard

D	L	d	Solid Length	Spring Constant N/mm (kgf/mm)	1,000,000 times 60% Deflection	1,000,000 times Load N (kgf)
10.5	15	6	4.5	7.63 (0.78)	9	68.6 (7.0)
	20		6.0	5.72 (0.58)	12	
	25		7.5	4.58 (0.47)	15	
	30		9.0	3.81 (0.39)	18	
	35		10.5	3.27 (0.33)	21	
	40		12.0	2.86 (0.29)	24	
	45		13.5	2.54 (0.26)	27	
	50		15.0	2.29 (0.23)	30	
	55		16.5	2.08 (0.21)	33	
	60		18.0	1.91 (0.19)	36	
	65		19.5	1.76 (0.18)	39	
	70		21.0	1.63 (0.17)	42	
	75		22.5	1.53 (0.16)	45	
	80		24.0	1.43 (0.15)	48	
12.5	15	7	4.5	8.72 (0.89)	9	78.5 (8.0)
	20		6.0	6.54 (0.67)	12	
	25		7.5	5.23 (0.53)	15	
	30		9.0	4.36 (0.44)	18	
	35		10.5	3.74 (0.38)	21	
	40		12.0	3.27 (0.33)	24	
	45		13.5	2.91 (0.30)	27	
	50		15.0	2.62 (0.27)	30	
	55		16.5	2.38 (0.24)	33	
	60		18.0	2.18 (0.22)	36	
	65		19.5	2.01 (0.21)	39	
	70		21.0	1.87 (0.19)	42	
	75		22.5	1.74 (0.18)	45	
	80		24.0	1.63 (0.17)	48	
	90		27.0	1.45 (0.15)	54	
	100		30.0	1.31 (0.13)	60	
14.5	15	8.5	4.5	10.90 (1.11)	9	98.1 (10.0)
	20		6.0	8.17 (0.83)	12	
	25		7.5	6.54 (0.67)	15	
	30		9.0	5.45 (0.56)	18	
	35		10.5	4.67 (0.48)	21	
	40		12.0	4.09 (0.42)	24	
	45		13.5	3.63 (0.37)	27	
	50		15.0	3.27 (0.33)	30	
	55		16.5	2.97 (0.30)	33	
	60		18.0	2.72 (0.28)	36	
	65		19.5	2.51 (0.26)	39	
	70		21.0	2.33 (0.24)	42	
	75		22.5	2.18 (0.22)	45	
	80		24.0	2.04 (0.21)	48	
	90		27.0	1.82 (0.19)	54	
	100		30.0	1.63 (0.17)	60	
	110		33.0	1.49 (0.15)	66	
	120		36.0	1.36 (0.14)	72	
	125		37.5	1.31 (0.13)	75	
	150		45.0	1.09 (0.11)	90	

D	L	d	Solid Length	Spring Constant N/mm (kgf/mm)	1,000,000 times 60% Deflection	1,000,000 times Load N (kgf)
17	20	10.5	6.0	12.26 (1.25)	12	147.1 (15.0)
	25		7.5	9.81 (1.00)	15	
	30		9.0	8.17 (0.83)	18	
	35		10.5	7.00 (0.71)	21	
	40		12.0	6.13 (0.63)	24	
	45		13.5	5.45 (0.56)	27	
	50		15.0	4.90 (0.50)	30	
	55		16.5	4.46 (0.45)	33	
	60		18.0	4.09 (0.42)	36	
	65		19.5	3.77 (0.38)	39	
	70		21.0	3.50 (0.36)	42	
	75		22.5	3.27 (0.33)	45	
	80		24.0	3.06 (0.31)	48	
	90		27.0	2.72 (0.28)	54	
	100		30.0	2.45 (0.25)	60	
	110		33.0	2.23 (0.23)	66	
	120		36.0	2.04 (0.21)	72	
	125		37.5	1.96 (0.20)	75	
	150		45.0	1.63 (0.17)	90	
	175		52.5	1.40 (0.14)	105	
21	25	13.5	7.5	15.04 (1.53)	15	225.6 (23.0)
	30		9.0	12.53 (1.28)	18	
	35		10.5	10.74 (1.10)	21	
	40		12.0	9.40 (0.96)	24	
	45		13.5	8.35 (0.85)	27	
	50		15.0	7.52 (0.77)	30	
	55		16.5	6.83 (0.70)	33	
	60		18.0	6.27 (0.64)	36	
	65		19.5	5.78 (0.59)	39	
	70		21.0	5.37 (0.55)	42	
	75		22.5	5.01 (0.51)	45	
	80		24.0	4.70 (0.48)	48	
	90		27.0	4.18 (0.43)	54	
	100		30.0	3.76 (0.38)	60	
	110		33.0	3.42 (0.35)	66	
	120		36.0	3.13 (0.32)	72	
	125		37.5	3.01 (0.31)	75	
	130		39.0	2.89 (0.29)	78	
	140		42.0	2.69 (0.27)	84	
	150		45.0	2.51 (0.26)	90	
	175		52.5	2.15 (0.22)	105	
	200		60.0	1.88 (0.19)	120	

SUN RISE technologies
Tel: +662-324-3184-(89) Fax: +662-324-3190 / +662-324-3103
Website: www.sunrisegr.com Email: sale@sunrisegr.com

Super-High Deflection Spring - สปริงยุบตัวได้สูงมาก

ORDER EXAMPLE | Model | D - L | 19SSU12.5-050

สปริงสีฟ้าอ่อน
Light Blue Spring
Model: 19SSU

Spring Load Chart
Light ← → Heavy

OIL FREE™ ACORE

D	L	d	Solid Length	Spring Constant N/mm (kgf/mm)	1,000,000 times	
					60% Deflection	Load N (kgf)
26	30	16.5	9.0	16.34 (1.67)	18	294.2 (30.0)
	35		10.5	14.01 (1.43)	21	
	40		12.0	12.26 (1.25)	24	
	45		13.5	10.90 (1.11)	27	
	50		15.0	9.81 (1.00)	30	
	55		16.5	8.92 (0.91)	33	
	60		18.0	8.17 (0.83)	36	
	65		19.5	7.54 (0.77)	39	
	70		21.0	7.00 (0.71)	42	
	75		22.5	6.54 (0.67)	45	
	80		24.0	6.13 (0.63)	48	
	90		27.0	5.45 (0.56)	54	
	100		30.0	4.90 (0.50)	60	
	110		33.0	4.46 (0.45)	66	
	120		36.0	4.09 (0.42)	72	
	125		37.5	3.92 (0.40)	75	
	130		39.0	3.77 (0.38)	78	
	140		42.0	3.50 (0.36)	84	
	150		45.0	3.27 (0.33)	90	
	175		52.5	2.80 (0.29)	105	
	200		60.0	2.45 (0.25)	120	
	225		67.5	2.18 (0.22)	135	
	250		75.0	1.96 (0.20)	150	
31	35	21	10.5	17.75 (1.81)	21	372.7 (38.0)
	40		12.0	15.53 (1.58)	24	
	45		13.5	13.80 (1.41)	27	
	50		15.0	12.42 (1.27)	30	
	55		16.5	11.29 (1.15)	33	
	60		18.0	10.35 (1.06)	36	
	65		19.5	9.56 (0.97)	39	
	70		21.0	8.87 (0.90)	42	
	75		22.5	8.28 (0.84)	45	
	80		24.0	7.76 (0.79)	48	
	90		27.0	6.90 (0.70)	54	
	100		30.0	6.21 (0.63)	60	
	110		33.0	5.65 (0.58)	66	
	120		36.0	5.18 (0.53)	72	
	125		37.5	4.97 (0.51)	75	
	130		39.0	4.78 (0.49)	78	
	140		42.0	4.44 (0.45)	84	
	150		45.0	4.14 (0.42)	90	
	160		48.0	3.88 (0.40)	96	
	170		51.0	3.65 (0.37)	102	
	175		52.5	3.55 (0.36)	105	
	180		54.0	3.45 (0.35)	108	
	190		57.0	3.27 (0.33)	114	
	200		60.0	3.11 (0.32)	120	
	250		75.0	2.48 (0.25)	150	
	300		90.0	2.07 (0.21)	180	

D	L	d	Solid Length	Spring Constant N/mm (kgf/mm)	1,000,000 times	
					60% Deflection	Load N (kgf)
37	40	26	12.0	19.20 (1.96)	24	460.9 (47.0)
	45		13.5	17.07 (1.74)	27	
	50		15.0	15.36 (1.57)	30	
	55		16.5	13.97 (1.42)	33	
	60		18.0	12.80 (1.31)	36	
	65		19.5	11.82 (1.21)	39	
	70		21.0	10.97 (1.12)	42	
	75		22.5	10.24 (1.04)	45	
	80		24.0	9.60 (0.98)	48	
	90		27.0	8.54 (0.87)	54	
	100		30.0	7.68 (0.78)	60	
	110		33.0	6.98 (0.71)	66	
	120		36.0	6.40 (0.65)	72	
	130		39.0	5.91 (0.60)	78	
	140		42.0	5.49 (0.56)	84	
	150		45.0	5.12 (0.52)	90	
	160		48.0	4.80 (0.49)	96	
	170		51.0	4.52 (0.46)	102	
	180		54.0	4.27 (0.44)	108	
	190		57.0	4.04 (0.41)	114	
	200		60.0	3.84 (0.39)	120	
	225		67.5	3.41 (0.35)	135	
	250		75.0	3.07 (0.31)	150	
	275		82.5	2.79 (0.28)	165	
	300		90.0	2.56 (0.26)	180	
43	50	31	15.0	19.61 (2.00)	30	588.4 (60.0)
	60		18.0	16.34 (1.67)	36	
	70		21.0	14.01 (1.43)	42	
	80		24.0	12.26 (1.25)	48	
	90		27.0	10.90 (1.11)	54	
	100		30.0	9.81 (1.00)	60	
	110		33.0	8.92 (0.91)	66	
	120		36.0	8.17 (0.83)	72	
	130		39.0	7.54 (0.77)	78	
	140		42.0	7.00 (0.71)	84	
	150		45.0	6.54 (0.67)	90	
	160		48.0	6.13 (0.63)	96	
	170		51.0	5.77 (0.59)	102	
	180		54.0	5.45 (0.56)	108	
	190		57.0	5.16 (0.53)	114	
	200		60.0	4.90 (0.50)	120	
	225		67.5	4.36 (0.44)	135	
	250		75.0	3.92 (0.40)	150	
	275		82.5	3.57 (0.36)	165	
	300		90.0	3.27 (0.33)	180	

สปริงแม่พิมพ์

High Deflection Spring - สปริงยุบตัวได้สูง



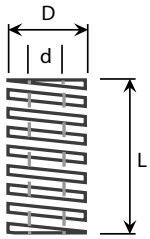

สปริงสีขาวงาช้าง
Ivory White Spring
Model: 19SSR

OIL FREE™ CORE

Spring Load Chart

Light ← → Heavy

แรงกด Load	±10%
ความได้ฉาก Perpendicularity	3° or less
ระยะเผื่อความยาว Free Length	≤ 50 ±0.5mm ≥ 55 ±1.5%

ORDER EXAMPLE

Model	D - L
19SSR12.5-050	

SAE9245

JIS Standard

D	L	d	Solid Length	Spring Constant N/mm (kgf/mm)	1,000,000 times	
					50% Deflection	Load N (kgf)
10.5	15	6	6	10.46 (1.07)	7.5	78.5 (8.0)
	20		8	7.85 (0.80)	10.0	
	25		10	6.28 (0.64)	12.5	
	30		12	5.23 (0.53)	15.0	
	35		14	4.48 (0.46)	17.5	
	40		16	3.92 (0.40)	20.0	
	45		18	3.49 (0.36)	22.5	
	50		20	3.14 (0.32)	25.0	
	55		22	2.85 (0.29)	27.5	
	60		24	2.62 (0.27)	30.0	
	65		26	2.41 (0.25)	32.5	
	70		28	2.24 (0.23)	35.0	
	75		30	2.09 (0.21)	37.5	
	80		32	1.96 (0.20)	40.0	
12.5	15	7	6	11.77 (1.20)	7.5	88.3 (9.0)
	20		8	8.83 (0.90)	10.0	
	25		10	7.06 (0.72)	12.5	
	30		12	5.88 (0.60)	15.0	
	35		14	5.04 (0.51)	17.5	
	40		16	4.41 (0.45)	20.0	
	45		18	3.92 (0.40)	22.5	
	50		20	3.53 (0.36)	25.0	
	55		22	3.21 (0.33)	27.5	
	60		24	2.94 (0.30)	30.0	
	65		26	2.72 (0.28)	32.5	
	70		28	2.52 (0.26)	35.0	
	75		30	2.35 (0.24)	37.5	
	80		32	2.21 (0.23)	40.0	
	90		36	1.96 (0.20)	45.0	
	100		40	1.77 (0.18)	50.0	

D	L	d	Solid Length	Spring Constant N/mm (kgf/mm)	1,000,000 times	
					50% Deflection	Load N (kgf)
14.5	15	8.5	6	17.00 (1.73)	7.5	127.5 (13.0)
	20		8	12.75 (1.30)	10.0	
	25		10	10.20 (1.04)	12.5	
	30		12	8.50 (0.87)	15.0	
	35		14	7.28 (0.74)	17.5	
	40		16	6.37 (0.65)	20.0	
	45		18	5.67 (0.58)	22.5	
	50		20	5.10 (0.52)	25.0	
	55		22	4.64 (0.47)	27.5	
	60		24	4.25 (0.43)	30.0	
	65		26	3.92 (0.40)	32.5	
	70		28	3.64 (0.37)	35.0	
	75		30	3.40 (0.35)	37.5	
	80		32	3.19 (0.33)	40.0	
	90		36	2.83 (0.29)	45.0	
	100		40	2.55 (0.26)	50.0	
	125		50	2.04 (0.21)	62.5	
	150		60	1.70 (0.17)	75.0	
17	25	10.5	10	15.69 (1.60)	12.5	196.1 (20.0)
	30		12	13.08 (1.33)	15.0	
	35		14	11.21 (1.14)	17.5	
	40		16	9.81 (1.00)	20.0	
	45		18	8.72 (0.89)	22.5	
	50		20	7.85 (0.80)	25.0	
	55		22	7.13 (0.73)	27.5	
	60		24	6.54 (0.67)	30.0	
	65		26	6.03 (0.62)	32.5	
	70		28	5.60 (0.57)	35.0	
	75		30	5.23 (0.53)	37.5	
	80		32	4.90 (0.50)	40.0	
	90		36	4.36 (0.44)	45.0	
	100		40	3.92 (0.40)	50.0	
	125		50	3.14 (0.32)	62.5	
	150		60	2.62 (0.27)	75.0	
	175		70	2.24 (0.23)	87.5	

SUN RISE technologies
Tel: +662-324-3184-(89) Fax: +662-324-3190 / +662-324-3103
Website: www.sunrisegr.com Email: sale@sunrisegr.com

High Deflection Spring - สปริงยุบตัวได้สูง

ORDER EXAMPLE | Model D - L | 19SSR12.5-050

สปริงสีขาวงาช้าง
Ivory White Spring
Model: 19SSR

Spring Load Chart
Light ← → Heavy

OIL FREE™ ACORE

D	L	d	Solid Length	Spring Constant N/mm (kgf/mm)	1,000,000 times 50% Deflection	1,000,000 times Load N (kgf)
21	25	13.5	10	23.54 (2.40)	12.5	294.2 (30.0)
	30		12	19.61 (2.00)	15.0	
	35		14	16.81 (1.71)	17.5	
	40		16	14.71 (1.50)	20.0	
	45		18	13.08 (1.33)	22.5	
	50		20	11.77 (1.20)	25.0	
	55		22	10.70 (1.09)	27.5	
	60		24	9.81 (1.00)	30.0	
	65		26	9.05 (0.92)	32.5	
	70		28	8.41 (0.86)	35.0	
	75		30	7.85 (0.80)	37.5	
	80		32	7.35 (0.75)	40.0	
	90		36	6.54 (0.67)	45.0	
	100		40	5.88 (0.60)	50.0	
	110		44	5.35 (0.55)	55.0	
	120		48	4.90 (0.50)	60.0	
	125		50	4.71 (0.48)	62.5	
	130		52	4.53 (0.46)	65.0	
	140		56	4.20 (0.43)	70.0	
	150		60	3.92 (0.40)	75.0	
	175		70	3.36 (0.34)	87.5	
	200		80	2.94 (0.30)	100.0	
26	25	16.5	10	31.38 (3.20)	12.5	392.3 (40.0)
	30		12	26.15 (2.67)	15.0	
	35		14	22.42 (2.29)	17.5	
	40		16	19.61 (2.00)	20.0	
	45		18	17.43 (1.78)	22.5	
	50		20	15.69 (1.60)	25.0	
	55		22	14.26 (1.45)	27.5	
	60		24	13.08 (1.33)	30.0	
	65		26	12.07 (1.23)	32.5	
	70		28	11.21 (1.14)	35.0	
	75		30	10.46 (1.07)	37.5	
	80		32	9.81 (1.00)	40.0	
	90		36	8.72 (0.89)	45.0	
	100		40	7.85 (0.80)	50.0	
	110		44	7.13 (0.73)	55.0	
	120		48	6.54 (0.67)	60.0	
	125		50	6.28 (0.64)	62.5	
	130		52	6.03 (0.62)	65.0	
	140		56	5.60 (0.57)	70.0	
	150		60	5.23 (0.53)	75.0	
	175		70	4.48 (0.46)	87.5	
	200		80	3.92 (0.40)	100.0	
	225		90	3.49 (0.36)	112.5	
	250		100	3.14 (0.32)	125.0	
31	35	21	14	28.02 (2.86)	17.5	490.3 (50.0)
	40		16	24.52 (2.50)	20.0	
	45		18	21.79 (2.22)	22.5	
	50		20	19.61 (2.00)	25.0	
	55		22	17.83 (1.82)	27.5	
	60		24	16.34 (1.67)	30.0	
	65		26	15.09 (1.54)	32.5	
	70		28	14.01 (1.43)	35.0	
	75		30	13.08 (1.33)	37.5	
	80		32	12.26 (1.25)	40.0	
	90		36	10.90 (1.11)	45.0	
	100		40	9.81 (1.00)	50.0	
	110		44	8.92 (0.91)	55.0	
	120		48	8.17 (0.83)	60.0	
	125		50	7.85 (0.80)	62.5	
	130		52	7.54 (0.77)	65.0	
	140		56	7.00 (0.71)	70.0	
	150		60	6.54 (0.67)	75.0	
31	160	21	67	6.13 (0.63)	80.0	490.3 (50.0)
	170		68	5.77 (0.59)	85.0	
	175		70	5.60 (0.57)	87.5	
	180		72	5.45 (0.56)	90.0	
	190		76	5.16 (0.53)	95.0	
	200		80	4.90 (0.50)	100.0	
	250		100	3.92 (0.40)	125.0	
	300		120	3.27 (0.33)	150.0	
39	35	26	14	33.62 (3.43)	17.5	588.4 (60.0)
	40		16	29.42 (3.00)	20.0	
	45		18	26.15 (2.67)	22.5	
	50		20	23.54 (2.40)	25.0	
	55		22	21.40 (2.18)	27.5	
	60		24	19.61 (2.00)	30.0	
	65		26	18.10 (1.85)	32.5	
	70		28	16.81 (1.71)	35.0	
	75		30	15.69 (1.60)	37.5	
	80		32	14.71 (1.50)	40.0	
	90		36	13.08 (1.33)	45.0	
	100		40	11.77 (1.20)	50.0	
	110		44	10.70 (1.09)	55.0	
	120		48	9.81 (1.00)	60.0	
	125		50	9.41 (0.96)	62.5	
	130		52	9.05 (0.92)	65.0	
	140		56	8.41 (0.86)	70.0	
	150		60	7.85 (0.80)	75.0	
	160		64	7.35 (0.75)	80.0	
	170		68	6.92 (0.71)	85.0	
	175		70	6.72 (0.69)	87.5	
	180		72	6.54 (0.67)	90.0	
	190		76	6.19 (0.63)	95.0	
	200		80	5.88 (0.60)	100.0	
	250		100	4.71 (0.48)	125.0	
	300		120	3.92 (0.40)	150.0	
46	50	33	20	43.15 (4.40)	25.0	1079 (110)
	60		24	35.96 (3.67)	30.0	
	70		28	30.82 (3.14)	35.0	
	80		32	26.97 (2.75)	40.0	
	90		36	23.97 (2.44)	45.0	
	100		40	21.57 (2.20)	50.0	
	110		44	19.61 (2.00)	55.0	
	120		48	17.98 (1.83)	60.0	
	125		50	17.26 (1.76)	62.5	
	130		52	16.60 (1.69)	65.0	
	140		56	15.41 (1.57)	70.0	
	150		60	14.38 (1.47)	75.0	
	175		70	12.33 (1.26)	87.5	
	200		80	10.79 (1.10)	100.0	
	225		90	9.59 (0.98)	112.5	
	250		100	8.63 (0.88)	125.0	
	275		110	7.85 (0.80)	137.5	
	300		120	7.19 (0.73)	150.0	

สปริงแม่พิมพ์

Medium Deflection Spring - สปริงยุบตัวได้ปานกลาง



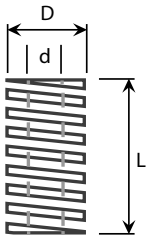

สปริงสีส้ม
Orange Spring
Model: 19SSS

OIL FREE™ CORE

Spring Load Chart

Light ← → Heavy

แรงกด Load	+20% -10%
ความได้ฉาก Perpendicularity	3° or less
ระยะเผื่อความยาว Free Length	±2%

ORDER EXAMPLE

Model D - L

19SSS21-050

SAE9245

JIS Standard

D	L	d	Solid Length	Spring Constant N/mm (kgf/mm)	1,000,000 times 40% Deflection	1,000,000 times Load N (kgf)
17	30	10.5	15.0	24.52 (2.50)	12	294.2 (30.0)
	40		20.0	18.39 (1.88)	16	
	50		25.0	14.71 (1.50)	20	
	60		30.0	12.26 (1.25)	24	
	70		35.0	10.51 (1.07)	28	
	80		40.0	9.19 (0.94)	32	
	90		45.0	8.17 (0.83)	36	
	100		50.0	7.35 (0.75)	40	
21	30	13.5	15.0	35.17 (3.59)	12	422.0 (43.0)
	40		20.0	26.38 (2.69)	16	
	50		25.0	21.10 (2.15)	20	
	60		30.0	17.58 (1.79)	24	
	70		35.0	15.07 (1.54)	28	
	80		40.0	13.19 (1.34)	32	
	90		45.0	11.72 (1.20)	36	
	100		50.0	10.55 (1.08)	40	
	110		55.0	9.59 (0.98)	44	
	125		62.5	8.44 (0.86)	50	
26	30	16.5	15.0	47.42 (4.84)	12	569.0 (58.0)
	40		20.0	35.56 (3.63)	16	
	50		25.0	28.45 (2.90)	20	
	60		30.0	23.71 (2.42)	24	
	70		35.0	20.32 (2.07)	28	
	80		40.0	17.78 (1.81)	32	
	90		45.0	15.81 (1.61)	36	
	100		50.0	14.23 (1.45)	40	
	110		55.0	12.93 (1.32)	44	
	125		62.5	11.38 (1.16)	50	
	150		75.0	9.48 (0.97)	60	

D	L	d	Solid Length	Spring Constant N/mm (kgf/mm)	1,000,000 times 40% Deflection	1,000,000 times Load N (kgf)
31	40	21	20.0	49.00 (5.00)	16	784.0 (79.9)
	50		25.0	39.20 (4.00)	20	
	60		30.0	32.67 (3.33)	24	
	70		35.0	28.00 (2.86)	28	
	80		40.0	24.50 (2.50)	32	
	90		45.0	21.78 (2.22)	36	
	100		50.0	19.60 (2.00)	40	
	110		55.0	17.82 (1.82)	44	
	125		62.5	15.68 (1.60)	50	
	150		75.0	13.07 (1.33)	60	
	175		87.5	11.20 (1.14)	70	
	200		100.0	9.80 (1.00)	80	
37	40	26	20.0	52.13 (5.32)	16	834.0 (85.0)
	50		25.0	41.70 (4.25)	20	
	60		30.0	34.75 (3.54)	24	
	70		35.0	29.79 (3.04)	28	
	80		40.0	26.06 (2.66)	32	
	90		45.0	23.17 (2.36)	36	
	100		50.0	20.85 (2.13)	40	
	110		55.0	18.95 (1.93)	44	
	125		62.5	16.68 (1.70)	50	
	150		75.0	13.90 (1.42)	60	
	175		87.5	11.91 (1.21)	70	
	200		100.0	10.43 (1.06)	80	
46	50	33	25.0	63.74 (6.50)	20	1275 (130)
	60		30.0	53.12 (5.42)	24	
	70		35.0	45.53 (4.64)	28	
	80		40.0	39.84 (4.06)	32	
	90		45.0	35.41 (3.61)	36	
	100		50.0	31.87 (3.25)	40	
	110		55.0	28.97 (2.95)	44	
	125		62.5	25.50 (2.60)	50	
	150		75.0	21.25 (2.17)	60	
	175		87.5	18.21 (1.86)	70	
	200		100.0	15.94 (1.63)	80	
	250		125.0	12.75 (1.30)	100	
	300		150.0	10.62 (1.08)	120	

Tel: +662-324-3184-(89) Fax: +662-324-3190 / +662-324-3103
Website: www.sunrisegr.com Email: sale@sunrisegr.com

Lightest Load Spring - สปริงรับแรงกดที่มีค่าน้อยมาก

OIL FREE™ CORE



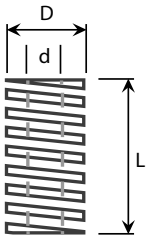

สปริงสีเหลือง
Yellow Spring
Model: 19SF

Spring Load Chart

Light ← → Heavy

แรงกด Load	±10%
ความได้ฉาก Perpendicularity	2° or less
ระยะเผื่อความยาว Free Length	≤ 50 ±0.5mm ≥ 55 ±1

ORDER EXAMPLE

Model D - L
19SF25-050

M SAE9245

i JIS Standard

D	L	d	Spring Constant (kgf/mm)	300,000 times		500,000 times		1,000,000 times	
				50% Deflection	Load N (kgf)	45% Deflection	Load N (kgf)	40% Deflection	Load N (kgf)
6	15	3	0.80	7.5	59 (6)	6.8	53 (5.4)	6.0	47 (4.8)
	20		0.60	10.0		9.0		8.0	
	25		0.48	12.5		11.3		10.0	
	30		0.40	15.0		13.5		12.0	
	35		0.34	17.5		15.8		14.0	
	40		0.30	20.0		18.0		16.0	
	45		0.27	22.5		20.3		18.0	
	50		0.24	25.0		22.5		20.0	
	55		0.22	27.5		24.8		22.0	
	60		0.20	30.0		27.0		24.0	
8	10	4	1.56	5.0	79 (8)	4.5	71 (7.2)	4.0	63 (6.4)
	15		1.04	7.5		6.8		6.0	
	20		0.78	10.0		9.0		8.0	
	25		0.62	12.5		11.2		10.0	
	30		0.52	15.0		13.5		12.0	
	35		0.44	17.5		15.7		14.0	
	40		0.39	20.0		18.0		16.0	
	45		0.35	22.5		20.2		18.0	
	50		0.31	25.0		22.5		20.0	
	55		0.28	27.5		24.7		22.0	
	60		0.26	30.0		27.0		24.0	
	65		0.24	32.5		29.2		26.0	
	70		0.22	35.0		31.5		28.0	
	75		0.21	37.5		33.7		30.0	
	80		0.20	40.0		36.0		32.0	
	90		0.17	45.0		40.5		36.0	
	100		0.16	50.0		45.0		40.0	
10	10	5	2.00	5.0	98 (10)	4.5	88 (9)	4.0	78 (8)
	15		1.32	7.5		6.8		6.0	
	20		1.00	10.0		9.0		8.0	
	25		0.80	12.5		11.2		10.0	
	30		0.67	15.0		13.5		12.0	
	35		0.57	17.5		15.7		14.0	
	40		0.50	20.0		18.0		16.0	
	45		0.44	22.5		20.2		18.0	
	50		0.40	25.0		22.5		20.0	
	55		0.36	27.5		24.7		22.0	
	60		0.33	30.0		27.0		24.0	
	65		0.31	32.5		29.2		26.0	
	70		0.29	35.0		31.5		28.0	
	75		0.27	37.5		33.7		30.0	
	80		0.25	40.0		36.0		32.0	
	90		0.22	45.0		40.5		36.0	
	100		0.20	50.0		45.0		40.0	
	125		0.16	62.5		56.2		50.0	

สปริงแม่พิมพ์

Lightest Load Spring - สปริงรับแรงกดที่มีค่าน้อยมาก

ORDER EXAMPLE | Model D - L | 19SF25-050

สปริงสีเหลือง
Yellow Spring
Model: 19SF

Spring Load Chart

Light ← → Heavy

OIL FREE™ ACORE

D	L	d	Spring Constant (kgf/mm)	300,000 times		500,000 times		1,000,000 times	
				50% Deflection	Load N (kgf)	45% Deflection	Load N (kgf)	40% Deflection	Load N (kgf)
12	20	6	1.40	10.0	137 (14)	9.0	124 (13)	8.0	110 (11)
	25		1.12	12.5		11.2		10.0	
	30		0.93	15.0		13.5		12.0	
	35		0.80	17.5		15.7		14.0	
	40		0.70	20.0		18.0		16.0	
	45		0.62	22.5		20.2		18.0	
	50		0.56	25.0		22.5		20.0	
	55		0.51	27.5		24.7		22.0	
	60		0.47	30.0		27.0		24.0	
	65		0.43	32.5		29.2		26.0	
	70		0.40	35.0		31.5		28.0	
	75		0.37	37.5		33.7		30.0	
	80		0.35	40.0		36.0		32.0	
	90		0.31	45.0		40.5		36.0	
	100		0.28	50.0		45.0		40.0	
	125		0.22	62.5		56.2		50.0	
14	20	7	1.78	10.0	177 (18)	9.0	159 (16)	8.0	141 (14)
	25		1.44	12.5		11.2		10.0	
	30		1.20	15.0		13.5		12.0	
	35		1.03	17.5		15.7		14.0	
	40		0.90	20.0		18.0		16.0	
	45		0.80	22.5		20.2		18.0	
	50		0.72	25.0		22.5		20.0	
	55		0.65	27.5		24.7		22.0	
	60		0.60	30.0		27.0		24.0	
	65		0.55	32.5		29.2		26.0	
	70		0.51	35.0		31.5		28.0	
	75		0.48	37.5		33.7		30.0	
	80		0.45	40.0		36.0		32.0	
	90		0.40	45.0		40.5		36.0	
	100		0.36	50.0		45.0		40.0	
	125		0.29	62.5		56.2		50.0	
16	20	8	2.11	10.0	206 (21)	9.0	185 (19)	8.0	165 (17)
	25		1.68	12.5		11.2		10.0	
	30		1.40	15.0		13.5		12.0	
	35		1.20	17.5		15.7		14.0	
	40		1.05	20.0		18.0		16.0	
	45		0.94	22.5		20.2		18.0	
	50		0.84	25.0		22.5		20.0	
	55		0.77	27.5		24.7		22.0	
	60		0.70	30.0		27.0		24.0	
	65		0.65	32.5		29.2		26.0	
	70		0.60	35.0		31.5		28.0	
	75		0.56	37.5		33.7		30.0	
	80		0.53	40.0		36.0		32.0	
	90		0.47	45.0		40.5		36.0	
	100		0.42	50.0		45.0		40.0	
	125		0.34	62.5		56.2		50.0	
18	20	9	2.56	10.0	255 (26)	9.0	229 (23)	8.0	204 (21)
	25		2.08	12.5		11.2		10.0	
	30		1.74	15.0		13.5		12.0	
	35		1.49	17.5		15.7		14.0	
	40		1.30	20.0		18.0		16.0	
	45		1.16	22.5		20.2		18.0	
	50		1.04	25.0		22.5		20.0	
	55		0.95	27.5		24.7		22.0	
	60		0.87	30.0		27.0		24.0	
	65		0.80	32.5		29.2		26.0	
	70		0.74	35.0		31.5		28.0	
	75		0.70	37.5		33.7		30.0	
	80		0.65	40.0		36.0		32.0	
	90		0.58	45.0		40.5		36.0	
	100		0.52	50.0		45.0		40.0	
	125		0.42	62.5		56.2		50.0	
	150		0.34	75.0		67.5		60.0	

SUN RISE technologies
Tel: +662-324-3184-(89) Fax: +662-324-3190 / +662-324-3103
Website: www.sunrisegr.com Email: sale@sunrisegr.com

Lightest Load Spring - สปริงรับแรงกดที่มีค่าน้อยมาก

ORDER EXAMPLE | Model | D - L | 19SF25-050

สปริงสีเหลือง
Yellow Spring
Model: 19SF

Spring Load Chart
Light ← → Heavy

OIL FREE™ ACORE

D	L	d	Spring Constant (kgf/mm)	300,000 times 50% Deflection	300,000 times Load N (kgf)	500,000 times 45% Deflection	500,000 times Load N (kgf)	1,000,000 times 40% Deflection	1,000,000 times Load N (kgf)
20	20	11	3.22	10.0	314 (32)	9.0	282 (29)	8.0	251 (26)
	25		2.56	12.5		11.2		10.0	
	30		2.13	15.0		13.5		12.0	
	35		1.83	17.5		15.7		14.0	
	40		1.60	20.0		18.0		16.0	
	45		1.42	22.5		20.2		18.0	
	50		1.28	25.0		22.5		20.0	
	55		1.16	27.5		24.7		22.0	
	60		1.07	30.0		27.0		24.0	
	65		0.98	32.5		29.2		26.0	
	70		0.91	35.0		31.5		28.0	
	75		0.85	37.5		33.7		30.0	
	80		0.80	40.0		36.0		32.0	
	90		0.71	45.0		40.5		36.0	
	100		0.64	50.0		45.0		40.0	
	125		0.51	62.5		56.2		50.0	
	150		0.43	75.0		67.5		60.0	
	175		0.37	87.5		78.7		70.0	
22	25	11	3.20	12.5	392 (40)	11.2	353 (36)	10.0	314 (32)
	30		2.67	15.0		13.5		12.0	
	35		2.29	17.5		15.7		14.0	
	40		2.00	20.0		18.0		16.0	
	45		1.78	22.5		20.2		18.0	
	50		1.60	25.0		22.5		20.0	
	55		1.46	27.5		24.7		22.0	
	60		1.33	30.0		27.0		24.0	
	65		1.23	32.5		29.2		26.0	
	70		1.14	35.0		31.5		28.0	
	75		1.07	37.5		33.7		30.0	
	80		1.00	40.0		36.0		32.0	
	90		0.89	45.0		40.5		36.0	
	100		0.80	50.0		45.0		40.0	
	125		0.64	62.5		56.2		50.0	
	150		0.53	75.0		67.5		60.0	
	175		0.46	87.5		78.7		70.0	
25	25	13.5	4.00	12.5	490 (50)	11.2	441 (45)	10.0	392 (40)
	30		3.33	15.0		13.5		12.0	
	35		2.85	17.5		15.7		14.0	
	40		2.50	20.0		18.0		16.0	
	45		2.22	22.5		20.2		18.0	
	50		2.00	25.0		22.5		20.0	
	55		1.82	27.5		24.7		22.0	
	60		1.67	30.0		27.0		24.0	
	65		1.54	32.5		29.2		26.0	
	70		1.43	35.0		31.5		28.0	
	75		1.33	37.5		33.7		30.0	
	80		1.25	40.0		36.0		32.0	
	90		1.11	45.0		40.5		36.0	
	100		1.00	50.0		45.0		40.0	
	125		0.80	62.5		56.2		50.0	
	150		0.67	75.0		67.5		60.0	
	175		0.57	87.5		78.7		70.0	
	200		0.50	100.0		90.0		80.0	
27	25	13.5	4.80	12.5	588 (60)	11.2	530 (54)	10.0	471 (48)
	30		4.00	15.0		13.5		12.0	
	35		3.43	17.5		15.7		14.0	
	40		3.00	20.0		18.0		16.0	
	45		2.67	22.5		20.2		18.0	
	50		2.40	25.0		22.5		20.0	
	55		2.18	27.5		24.7		22.0	
	60		2.00	30.0		27.0		24.0	
	65		1.85	32.5		29.2		26.0	
	70		1.71	35.0		31.5		28.0	
	75		1.60	37.5		33.7		30.0	
	80		1.50	40.0		36.0		32.0	
	90		1.33	45.0		40.5		36.0	
	100		1.20	50.0		45.0		40.0	
	125		0.96	62.5		56.2		50.0	
	150		0.80	75.0		67.5		60.0	
	175		0.96	87.5		78.7		70.0	
	200		0.60	100.0		90.0		80.0	

Lightest Load Spring - สปริงรับแรงกดที่มีค่าน้อยมาก

ORDER EXAMPLE | Model | D - L | 19SF25-050

สปริงสีเหลือง
Yellow Spring
Model: 19SF

Spring Load Chart
Light ← → Heavy

OIL FREE™ ACORE

D	L	d	Spring Constant (kgf/mm)	300,000 times		500,000 times		1,000,000 times	
				50% Deflection	Load N (kgf)	45% Deflection	Load N (kgf)	40% Deflection	Load N (kgf)
30	25	16	5.80	12.5	760 (72)	11.2	635 (65)	10.0	565 (58)
	30		4.83	15.0		13.5		12.0	
	35		4.13	17.5		15.7		14.0	
	40		3.60	20.0		18.0		16.0	
	45		3.21	22.5		20.2		18.0	
	50		2.88	25.0		22.5		20.0	
	55		2.63	27.5		24.7		22.0	
	60		2.40	30.0		27.0		24.0	
	65		2.22	32.5		29.2		26.0	
	70		2.05	35.0		31.5		28.0	
	75		1.93	37.5		33.7		30.0	
	80		1.80	40.0		36.0		32.0	
	90		1.60	45.0		40.5		36.0	
	100		1.44	50.0		45.0		40.0	
	125		1.15	62.5		56.2		50.0	
	150		0.96	75.0		67.5		60.0	
	175		0.82	87.5		78.7		70.0	
	200		0.72	100.0		90.0		80.0	
35	35	19	5.60	17.5	768 (78)	15.7	864 (88)	14.0	768 (78)
	40		4.90	20.0		18.0		16.0	
	45		4.36	22.5		20.2		18.0	
	50		3.92	25.0		22.5		20.0	
	55		3.56	27.5		24.7		22.0	
	60		3.26	30.0		27.0		24.0	
	65		3.02	32.5		29.2		26.0	
	70		2.80	35.0		31.5		28.0	
	75		2.61	37.5		33.7		30.0	
	80		2.45	40.0		36.0		32.0	
	90		2.17	45.0		40.5		36.0	
	100		1.96	50.0		45.0		40.0	
	125		1.57	62.5		56.2		50.0	
	150		1.30	75.0		67.5		60.0	
	175		1.12	87.5		78.7		70.0	
	200		0.98	100.0		90.0		80.0	
40	40	22	6.38	20.0	1254 (128)	18.0	1129 (115)	16.0	1003 (102)
	45		5.67	22.5		20.2		18.0	
	50		5.12	22.5		22.5		20.0	
	55		4.64	27.5		24.7		22.0	
	60		4.26	30.0		27.0		24.0	
	65		3.93	32.5		29.2		26.0	
	70		3.65	35.0		31.5		28.0	
	75		3.40	37.5		33.7		30.0	
	80		3.20	40.0		36.0		32.0	
	90		2.84	45.0		40.5		36.0	
	100		2.56	50.0		45.0		40.0	
	125		2.04	62.5		56.2		50.0	
	150		1.70	75.0		67.5		60.0	
	175		1.46	87.5		78.7		70.0	
	200		1.28	100.0		90.0		80.0	
	225		1.13	112.5		101.2		90.0	
	250		1.02	125.0		112.5		100.0	
	275		0.93	137.5		123.7		110.0	
	300		0.85	150.0		135.0		120.0	

Tel: +662-324-3184-(89) Fax: +662-324-3190 / +662-324-3103
Website: www.sunrisegr.com Email: sale@sunrisegr.com

Lightest Load Spring - สปริงรับแรงกดที่มีค่าน้อยมาก

ORDER EXAMPLE | Model | D - L | 19SF25-050

สปริงสีเหลือง
Yellow Spring
Model: 19SF

Spring Load Chart
Light ← → Heavy

OIL FREE™ ACORE

D	L	d	Spring Constant (kgf/mm)	300,000 times		500,000 times		1,000,000 times	
				50% Deflection	Load N (kgf)	45% Deflection	Load N (kgf)	40% Deflection	Load N (kgf)
50	50	27.5	8.00	25.0	1960 (200)	22.5	1764 (180)	20.0	1568 (160)
	55		7.27	27.5		24.7		22.0	
	60		6.66	30.0		27.0		24.0	
	65		6.15	32.5		29.2		26.0	
	70		5.71	35.0		31.5		28.0	
	75		5.33	37.5		33.7		30.0	
	80		5.00	40.0		36.0		32.0	
	90		4.44	45.0		40.5		36.0	
	100		4.00	50.0		45.0		40.0	
	125		3.20	62.5		56.2		50.0	
	150		2.66	75.0		67.5		60.0	
	175		2.28	87.5		78.7		70.0	
	200		2.00	100.0		90.0		80.0	
	225		1.78	112.5		101.2		90.0	
	250		1.60	125.0		112.5		100.0	
	275		1.45	137.5		123.7		110.0	
	300		1.33	150.0		135.0		120.0	
	350		1.14	175.0		157.5		140.0	
	400		1.00	200.0		180.0		160.0	
	450		0.89	225.0		202.5		180.0	
	500		0.80	250.0		225.0		200.0	
60	60	33	9.59	30.0	2820 (288)	27.0	2538 (259)	24.0	2256 (230)
	70		8.22	35.0		31.5		28.0	
	80		7.19	40.0		36.0		32.0	
	90		6.40	45.0		40.5		36.0	
	100		5.76	50.0		45.0		40.0	
	125		4.60	62.5		56.2		50.0	
	150		3.84	75.0		67.5		60.0	
	175		3.29	87.5		78.7		70.0	
	200		2.88	100.0		90.0		80.0	
	225		2.56	112.5		101.3		90.0	
	250		2.30	125.0		112.5		100.0	
	275		2.09	137.5		123.8		110.0	
	300		1.92	150.0		135.0		120.0	
	350		1.65	175.0		157.5		140.0	
	400		1.44	200.0		180.0		160.0	
	450		1.28	225.0		202.5		180.0	
	500		1.15	250.0		225.0		200.0	
70	70	38.5	11.43	35.0	3920 (400)	31.5	3528 (360)	28.0	3136 (320)
	80		10.00	40.0		36.0		32.0	
	90		8.89	45.0		40.5		36.0	
	100		8.00	50.0		45.0		40.0	
	125		6.40	62.5		56.2		50.0	
	150		5.33	75.0		67.5		60.0	
	175		4.57	87.5		78.7		70.0	
	200		4.00	100.0		90.0		80.0	
	225		3.56	112.5		101.3		90.0	
	250		3.20	125.0		112.5		100.0	
	275		2.91	137.5		123.8		110.0	
	300		2.67	150.0		135.0		120.0	
	350		2.29	175.0		157.5		140.0	

สปริงแม่พิมพ์

Light Load Spring - สปริงรับแรงกดที่มีค่าน้อย

OIL FREE™ ACORE



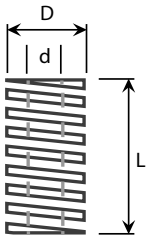

สปริงสีน้ำเงิน
Blue Spring
Model: 19SL

Spring Load Chart

Light ← → Heavy

แรงกด Load	±10%
ความได้ฉาก Perpendicularity	2° or less
ระยะเผื่อความยาว Free Length	≤ 50 ±0.5mm ≥ 55 ±1

ORDER EXAMPLE — Model D - L: 19SL25-050

Ⓜ SAE9245

ⓘ JIS Standard

D	L	d	Spring Constant (kgf/mm)	300,000 times		500,000 times		1,000,000 times	
				40% Deflection	Load N (kgf)	36% Deflection	Load N (kgf)	32% Deflection	Load N (kgf)
6	15	3	1.33	6.0	78 (8)	5.4	71 (7.2)	4.8	63 (64)
	20		1.00	8.0		7.2		6.4	
	25		0.80	10.0		9.0		8.0	
	30		0.67	12.0		10.8		9.6	
	35		0.57	14.0		12.6		11.2	
	40		0.50	16.0		14.4		12.8	
	45		0.44	18.0		16.2		14.4	
	50		0.40	20.0		18.0		16.0	
	55		0.36	22.0		19.8		17.6	
	60		0.33	24.0		21.6		19.2	
8	10	4	2.50	40.0	98 (10)	3.6	88 (9)	3.2	78 (8)
	15		1.67	6.0		5.4		4.8	
	20		1.25	8.0		7.2		6.4	
	25		1.00	10.0		9.0		8.0	
	30		0.83	12.0		10.8		9.6	
	35		0.71	14.0		12.6		11.2	
	40		0.63	16.0		14.4		12.8	
	45		0.56	18.0		16.2		14.4	
	50		0.50	20.0		18.0		16.0	
	55		0.46	22.0		19.8		17.6	
	60		0.42	24.0		21.6		19.2	
	65		0.38	26.0		23.4		20.8	
	70		0.36	28.0		25.2		22.4	
	75		0.33	30.0		27.0		24.0	
	80		0.31	32.0		28.8		25.6	
	90		0.28	36.0		32.4		28.8	
	100		0.25	40.0		36.0		32.0	
10	10	5	3.61	4.0	137 (14)	3.6	124 (13)	3.2	110 (11)
	15		2.41	6.0		5.4		4.8	
	20		1.81	8.0		7.2		6.4	
	25		1.45	10.0		9.0		8.0	
	30		1.21	12.0		10.8		9.6	
	35		1.03	14.0		12.6		11.2	
	40		0.90	16.0		14.4		12.8	
	45		0.80	18.0		16.2		14.4	
	50		0.73	20.0		18.0		16.0	
	55		0.66	22.0		19.8		17.6	
	60		0.60	24.0		21.6		19.2	
	65		0.55	26.0		23.4		20.8	
	70		0.51	28.0		25.2		22.4	
	75		0.48	30.0		27.0		24.0	
	80		0.45	32.0		28.8		25.6	
	90		0.40	36.0		32.4		28.8	
	100		0.36	40.0		36.0		32.0	
	125		0.28	50.0		45.0		40.0	

Tel: +662-324-3184-(89) Fax: +662-324-3190 / +662-324-3103
Website: www.sunrisegr.com Email: sale@sunrisegr.com

Light Load Spring - สปริงรับแรงกดที่มีค่าน้อย

ORDER EXAMPLE | Model | D - L | 19SL25-050

สปริงสีน้ำเงิน
Blue Spring
Model: 19SL

Spring Load Chart
Light ← → Heavy

OIL FREE™ ACORE

D	L	d	Spring Constant (kgf/mm)	300,000 times		500,000 times		1,000,000 times	
				40% Deflection	Load N (kgf)	36% Deflection	Load N (kgf)	32% Deflection	Load N (kgf)
12	20	6	2.63	8.0	206 (21)	7.2	185 (19)	6.4	165 (17)
	25		2.10	10.0		9.0		8.0	
	30		1.75	12.0		10.8		9.6	
	35		1.50	14.0		12.6		11.2	
	40		1.32	16.0		14.4		12.8	
	45		1.17	18.0		16.2		14.4	
	50		1.05	20.0		18.0		16.0	
	55		0.96	22.0		19.8		17.6	
	60		0.88	24.0		21.6		19.2	
	65		0.81	26.0		23.4		20.8	
	70		0.75	28.0		25.2		22.4	
	75		0.70	30.0		27.0		24.0	
	80		0.66	32.0		28.8		25.6	
	90		0.58	36.0		32.4		28.8	
	100		0.53	40.0		36.0		32.0	
	125		0.42	50.0		45.0		40.0	
14	20	7	3.47	8.0	275 (28)	7.2	247 (25)	6.4	220 (22)
	25		2.80	10.0		9.0		8.0	
	30		3.34	12.0		10.8		9.6	
	35		2.00	14.0		12.6		11.2	
	40		1.75	16.0		14.4		12.8	
	45		1.56	18.0		16.2		14.4	
	50		1.40	20.0		18.0		16.0	
	55		1.27	22.0		19.8		17.6	
	60		1.17	24.0		21.6		19.2	
	65		1.08	26.0		23.4		20.8	
	70		1.00	28.0		25.2		22.4	
	75		0.93	30.0		27.0		24.0	
	80		0.87	32.0		28.8		25.6	
	90		0.77	36.0		32.4		28.8	
	100		0.70	40.0		36.0		32.0	
	125		0.56	50.0		45.0		40.0	
16	20	8	4.44	8.0	343 (35)	7.2	309 (32)	6.4	275 (28)
	25		3.50	10.0		9.0		8.0	
	30		2.92	12.0		10.8		9.6	
	35		2.50	14.0		12.6		11.2	
	40		2.19	16.0		14.4		12.8	
	45		1.95	18.0		16.2		14.4	
	50		1.75	20.0		18.0		16.0	
	55		1.60	22.0		19.8		17.6	
	60		1.46	24.0		21.6		19.2	
	65		1.35	26.0		23.4		20.8	
	70		1.25	28.0		25.2		22.4	
	75		1.17	30.0		27.0		24.0	
	80		1.10	32.0		28.8		25.6	
	90		0.98	36.0		32.4		28.8	
	100		0.88	40.0		36.0		32.0	
	125		0.70	50.0		45.0		40.0	

สปริงแม่พิมพ์

Light Load Spring - สปริงรับแรงกดที่มีค่าน้อย

ORDER EXAMPLE | Model | D - L | 19SL25-050

สปริงสีน้ำเงิน
Blue Spring
Model: 19SL

Spring Load Chart
Light ← → Heavy

OIL FREE™ ACORE

D	L	d	Spring Constant (kgf/mm)	300,000 times		500,000 times		1,000,000 times	
				40% Deflection	Load N (kgf)	36% Deflection	Load N (kgf)	32% Deflection	Load N (kgf)
18	20	9	5.42	8.0	422 (43)	7.2	380 (39)	6.4	337 (34)
	25		4.30	10.0		9.0		8.0	
	30		3.58	12.0		10.8		9.6	
	35		3.07	14.0		12.6		11.2	
	40		2.69	16.0		14.4		12.8	
	45		2.39	18.0		16.2		14.4	
	50		2.15	20.0		18.0		16.0	
	55		1.96	22.0		19.8		17.6	
	60		1.79	24.0		21.6		19.2	
	65		1.66	26.0		23.4		20.8	
	70		1.54	28.0		25.2		22.4	
	75		1.44	30.0		27.0		24.0	
	80		1.35	32.0		28.8		25.6	
	90		1.20	36.0		32.4		28.8	
	100		1.07	40.0		36.0		32.0	
	125		0.86	50.0		45.0		40.0	
20	20	10	6.81	8.0	530 (54)	7.2	477 (48)	6.4	424 (43)
	25		5.40	10.0		9.0		8.0	
	30		4.50	12.0		10.8		9.6	
	35		3.86	14.0		12.6		11.2	
	40		3.38	16.0		14.4		12.8	
	45		3.00	18.0		16.2		14.4	
	50		2.70	20.0		18.0		16.0	
	55		2.45	22.0		19.8		17.6	
	60		2.25	24.0		21.6		19.2	
	65		2.08	26.0		23.4		20.8	
	70		1.93	28.0		25.2		22.4	
	75		1.80	30.0		27.0		24.0	
	80		1.69	32.0		28.8		25.6	
	90		1.50	36.0		32.4		28.8	
	100		1.35	40.0		36.0		32.0	
	125		1.08	50.0		45.0		40.0	
	150		0.90	60.0		54.0		48.0	
	175		0.77	70.0		63.0		56.0	
22	25	11	6.70	10.0	657 (67)	9.0	591 (60)	8.0	526 (54)
	30		5.60	12.0		10.8		9.6	
	35		4.80	14.0		12.6		11.2	
	40		4.20	16.0		14.4		12.8	
	45		3.72	18.0		16.2		14.4	
	50		3.35	20.0		18.0		16.0	
	55		3.05	22.0		19.8		17.6	
	60		2.80	24.0		21.6		19.2	
	65		2.58	26.0		23.4		20.8	
	70		2.40	28.0		25.2		22.4	
	75		2.23	30.0		27.0		24.0	
	80		2.10	32.0		28.8		25.6	
	90		1.86	36.0		32.4		28.8	
	100		1.68	40.0		36.0		32.0	
	125		1.34	50.0		45.0		40.0	
	150		1.12	60.0		54.0		48.0	
	175		0.96	70.0		63.0		56.0	

Tel: +662-324-3184-(89) Fax: +662-324-3190 / +662-324-3103
Website: www.sunrisegr.com Email: sale@sunrisegr.com

Light Load Spring - สปริงรับแรงกดที่มีค่าน้อย

ORDER EXAMPLE | Model | D - L | 19SL25-050

สปริงสีน้ำเงิน
Blue Spring
Model: 19SL

Spring Load Chart
Light ← → Heavy

OIL FREE™ ACORE

D	L	d	Spring Constant (kgf/mm)	300,000 times		500,000 times		1,000,000 times	
				40% Deflection	Load N (kgf)	36% Deflection	Load N (kgf)	32% Deflection	Load N (kgf)
25	25	12.5	8.40	10.0	824 (84)	9.0	741 (76)	8.0	659 (67)
	30		7.00	12.0		10.8		9.6	
	35		6.00	14.0		12.6		11.2	
	40		5.25	16.0		14.4		12.8	
	45		4.67	18.0		16.2		14.4	
	50		4.20	20.0		18.0		16.0	
	55		3.82	22.0		19.8		17.6	
	60		3.50	24.0		21.6		19.2	
	65		3.23	26.0		23.4		20.8	
	70		3.00	28.0		25.2		22.4	
	75		2.80	30.0		27.0		24.0	
	80		2.63	32.0		28.8		25.6	
	90		2.33	36.0		32.4		28.8	
	100		2.10	40.0		36.0		32.0	
	125		1.68	50.0		45.0		40.0	
	150		1.40	60.0		54.0		48.0	
	175		1.20	70.0		63.0		56.0	
	200		1.05	80.0		72.0		64.0	
27	25	13.5	10.00	10.0	981 (100)	9.0	883 (90)	8.0	785 (80)
	30		8.33	12.0		10.8		9.6	
	35		7.14	14.0		12.6		11.2	
	40		6.25	16.0		14.4		12.8	
	45		5.56	18.0		16.2		14.4	
	50		5.00	20.0		18.0		16.0	
	55		4.55	22.0		19.8		17.6	
	60		4.17	24.0		21.6		19.2	
	65		3.85	26.0		23.4		20.8	
	70		3.57	28.0		25.2		22.4	
	75		3.33	30.0		27.0		24.0	
	80		3.13	32.0		28.8		25.6	
	90		2.78	36.0		32.4		28.8	
	100		2.50	40.0		36.0		32.0	
	125		2.00	50.0		45.0		40.0	
	150		1.67	60.0		54.0		48.0	
	175		1.43	70.0		63.0		56.0	
	200		1.25	80.0		72.0		64.0	
30	25	15	12.11	10.0	1186 (121)	9.0	1067 (109)	8.0	949 (97)
	30		10.08	12.0		10.8		9.6	
	35		8.65	14.0		12.6		11.2	
	40		7.56	16.0		14.4		12.8	
	45		6.73	18.0		16.2		14.4	
	50		6.05	20.0		18.0		16.0	
	55		5.50	22.0		19.8		17.6	
	60		5.04	24.0		21.6		19.2	
	65		4.65	26.0		23.4		20.8	
	70		4.32	28.0		25.2		22.4	
	75		4.03	30.0		27.0		24.0	
	80		3.78	32.0		28.8		25.6	
	90		3.36	36.0		32.4		28.8	
	100		3.02	40.0		36.0		32.0	
	125		2.42	50.0		45.0		40.0	
	150		2.01	60.0		54.0		48.0	
	175		1.72	70.0		63.0		56.0	
	200		1.51	80.0		72.0		64.0	

สปริงแม่พิมพ์

Light Load Spring - สปริงรับแรงกดที่มีค่าน้อย

ORDER EXAMPLE | Model | D - L | 19SL25-050

สปริงสีน้ำเงิน
Blue Spring
Model: 19SL

Spring Load Chart
Light ← → Heavy

OIL FREE™ ACORE

D	L	d	Spring Constant (kgf/mm)	300,000 times		500,000 times		1,000,000 times	
				40% Deflection	Load N (kgf)	36% Deflection	Load N (kgf)	32% Deflection	Load N (kgf)
35	35	17.5	11.78	14.0	1617 (165)	12.6	1455 (148)	11.2	1294 (132)
	40		10.31	16.0		14.4		12.8	
	45		9.17	18.0		16.2		14.4	
	50		8.25	20.0		18.0		16.0	
	55		7.50	22.0		19.8		17.6	
	60		6.87	24.0		21.6		19.2	
	65		6.35	26.0		23.4		20.8	
	70		5.89	28.01		25.2		22.4	
	75		5.50	30.0		27.0		24.0	
	80		5.15	32.0		28.8		25.6	
	90		4.58	36.0		32.4		28.8	
	100		4.12	40.0		36.0		32.0	
	125		3.30	50.0		45.0		40.0	
	150		2.75	60.0		54.0		48.0	
	175		2.35	70.0		63.0		56.0	
	200		2.06	80.0		72.0		64.0	
40	40	20	13.50	16.0	2117 (216)	14.4	1905 (194)	12.8	1694 (173)
	45		12.00	18.0		16.2		14.4	
	50		10.80	20.0		18.0		16.0	
	55		9.82	22.0		19.8		17.6	
	60		9.00	24.0		21.6		19.2	
	65		8.31	26.0		23.4		20.8	
	70		7.71	28.0		25.2		22.4	
	75		7.20	30.0		27.0		24.0	
	80		6.70	32.0		28.8		25.6	
	90		6.00	36.0		32.4		28.8	
	100		5.40	40.0		36.0		32.0	
	125		4.32	50.0		45.0		40.0	
	150		3.60	60.0		54.0		48.0	
	175		3.08	70.0		63.0		56.0	
	200		2.70	80.0		72.0		64.0	
	225		2.40	90.0		81.0		72.0	
	250		2.16	100.0		90.0		80.0	
	275		1.96	110.0		99.0		88.0	
	300		1.80	120.0		108.0		96.0	
50	50	25	16.89	20.0	3312 (338)	18.0	2981 (304)	16.0	2650 (270)
	55		15.35	22.0		19.8		17.6	
	60		14.08	24.0		21.6		19.2	
	65		12.99	26.0		23.4		20.8	
	70		12.07	28.0		25.2		22.4	
	75		11.26	30.0		27.0		24.0	
	80		10.56	32.0		28.8		25.6	
	90		9.38	36.0		32.4		28.8	
	100		8.45	40.0		36.0		32.0	
	125		6.76	50.0		45.0		40.0	
	150		5.63	60.0		54.0		48.0	
	175		4.82	70.0		63.0		56.0	
	200		4.22	80.0		72.0		64.0	
	225		3.75	90.0		81.0		72.0	
	250		3.38	100.0		90.0		80.0	
	275		3.07	110.0		99.0		88.0	
	300		2.81	120.0		108.0		96.0	
	350		2.41	140.0		126.0		112.0	
	400		2.11	160.0		144.0		128.0	
	450		1.88	180.0		162.0		144.0	
	500		1.69	200.0		180.0		160.0	

SUN RISE technologies
Tel: +662-324-3184-(89) Fax: +662-324-3190 / +662-324-3103
Website: www.sunrisegr.com Email: sale@sunrisegr.com

Light Load Spring - สปริงรับแรงกดที่มีค่าน้อย

ORDER EXAMPLE | Model | D - L | 19SL25-050

สปริงสีน้ำเงิน
Blue Spring
Model: 19SL

Spring Load Chart
Light ← → Heavy

OIL FREE™ CORE

D	L	d	Spring Constant (kgf/mm)	300,000 times		500,000 times		1,000,000 times	
				40% Deflection	Load N (kgf)	36% Deflection	Load N (kgf)	32% Deflection	Load N (kgf)
60	60	30	20.25	24.0	4770 (486)	21.6	4293 (438)	19.2	3816 (389)*
	70		17.35	28.0		25.2		22.4	
	80		15.18	32.0		28.8		25.6	
	90		13.50	36.0		32.4		28.8	
	100		12.15	40.0		36.0		32.0	
	125		9.72	50.0		45.0		40.0	
	150		8.10	60.0		54.0		48.0	
	175		6.94	70.0		63.0		56.0	
	200		6.07	80.0		72.0		64.0	
	225		5.40	90.0		81.0		72.0	
	250		4.86	100.0		90.0		80.0	
	275		4.42	110.0		99.0		88.0	
	300		4.05	120.0		108.0		96.0	
	350		3.47	140.0		126.0		112.0	
	400		3.04	160.0		144.0		128.0	
	450		2.70	180.0		162.0		144.0	
	500		2.43	200.0		180.0		160.0	
70	70	38.5	21.79	28.0	5978 (610)	25.2	5380 (549)	22.4	4782 (488)
	80		19.06	32.0		28.8		25.6	
	90		16.94	36.0		32.4		28.8	
	100		15.25	40.0		36.0		32.0	
	125		12.20	50.0		45.0		40.0	
	150		10.17	60.0		54.0		48.0	
	175		8.71	70.0		63.0		56.0	
	200		7.62	80.0		72.0		64.0	
	225		6.78	90.0		81.0		72.0	
	250		6.10	100.0		90.0		80.0	
	275		5.55	110.0		99.0		88.0	
	300		5.08	120.0		108.0		96.0	
	350		4.36	140.0		126.0		112.0	

สปริงแม่พิมพ์

Medium Load Spring - สปริงรับแรงกดที่มีค่าปานกลาง



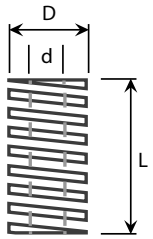

สปริงสีแดง
Red Spring
Model: 19SM

OIL FREE™ ACORE

Spring Load Chart

Light ← → Heavy

แรงกด Load	±10%
ความได้ฉาก Perpendicularity	2° or less
ระยะเผื่อความยาว Free Length	≤ 50 ±0.5mm ≥ 55 ±1

ORDER EXAMPLE | Model D - L | 19SM25-050

Ⓜ SAE9245

ⓘ JIS Standard

D	L	d	Spring Constant (kgf/mm)	300,000 times		500,000 times		1,000,000 times	
				32% Deflection	Load N (kgf)	28.8% Deflection	Load N (kgf)	25.6% Deflection	Load N (kgf)
6	15	3	2.08	4.8	98 (10)	4.3	88 (9)	3.8	79 (8)
	20		1.56	6.4		5.8		5.1	
	25		1.25	8.0		7.2		6.4	
	30		1.04	9.6		8.6		7.7	
	35		0.89	11.2		10.1		9.0	
	40		0.78	12.8		11.5		10.2	
	45		0.69	14.4		13.0		11.5	
	50		0.63	16.0		14.4		12.8	
	55		0.57	17.6		15.8		14.1	
	60		0.52	19.2		17.3		15.4	
8	10	4	4.34	3.2	137 (14)	2.9	123 (13)	2.6	110 (11)
	15		2.89	4.8		4.3		3.8	
	20		2.17	6.4		5.8		5.1	
	25		1.74	8.0		7.2		6.4	
	30		1.45	9.6		8.6		7.7	
	35		1.24	11.2		10.1		9.0	
	40		1.09	12.8		11.5		10.2	
	45		0.97	14.4		13.0		11.5	
	50		0.87	16.0		14.4		12.8	
	55		0.79	17.6		15.8		14.1	
	60		0.72	19.2		17.3		15.4	
	65		0.67	20.8		18.7		16.6	
	70		0.62	22.4		20.2		17.9	
	75		0.58	24.0		21.6		19.2	
	80		0.54	25.6		23.0		20.5	
	90		0.48	28.8		25.9		23.0	
	100		0.44	32.0		28.8		25.6	
10	10	5	6.21	3.2	196 (20)	2.9	176 (18)	2.6	157 (16)
	15		4.09	4.8		4.4		3.8	
	20		3.13	6.4		5.8		5.1	
	25		2.50	8.0		7.2		6.4	
	30		2.08	9.6		8.6		7.7	
	35		1.78	11.2		10.1		9.0	
	40		1.56	12.8		11.5		10.2	
	45		1.38	14.4		13.0		11.5	
	50		1.25	16.0		14.4		12.8	
	55		1.13	17.6		15.8		14.1	
	60		1.04	19.2		17.3		15.4	
	65		0.96	20.8		18.7		16.6	
	70		0.89	22.4		20.2		17.9	
	75		0.83	24.0		21.6		19.2	
	80		0.78	25.6		23.0		20.5	
	90		0.70	28.8		25.9		23.0	
	100		0.63	32.0		28.8		25.6	
	125		0.50	40.0		36.0		32.0	

SUN RISE technologies
Tel: +662-324-3184-(89) Fax: +662-324-3190 / +662-324-3103
Website: www.sunrisegr.com Email: sale@sunrisegr.com

Medium Load Spring - สปริงรับแรงกดที่มีค่าปานกลาง

ORDER EXAMPLE | Model | D - L | 19SM25-050

สปริงสีแดง
Red Spring
Model: 19SM

Spring Load Chart
Light ← → Heavy

OIL FREE™ ACORE

D	L	d	Spring Constant (kgf/mm)	300,000 times		500,000 times		1,000,000 times	
				32% Deflection	Load N (kgf)	28.8% Deflection	Load N (kgf)	25.6% Deflection	Load N (kgf)
12	20	6	4.53	6.4	284 (29)	5.8	256 (26)	5.1	227 (23)
	25		3.62	8.0		7.2		6.4	
	30		3.02	9.6		8.6		7.7	
	35		2.58	11.2		10.1		9.0	
	40		2.27	12.8		11.5		10.2	
	45		2.01	14.4		13.0		11.5	
	50		1.81	16.0		14.4		12.8	
	55		1.64	17.6		15.8		14.1	
	60		1.51	19.2		17.3		15.4	
	65		1.39	20.8		18.7		16.6	
	70		1.29	22.4		20.2		17.9	
	75		1.20	24.0		21.6		19.2	
	80		1.13	25.6		23.0		20.5	
	90		1.01	28.8		25.9		23.0	
	100		0.91	32.0		28.8		25.6	
	125		0.72	40.4		36.0		32.0	
14	20	7	6.03	6.4	383 (39)	5.8	345 (35)	5.1	306 (31)
	25		4.87	8.0		7.2		6.4	
	30		4.06	9.6		8.6		7.7	
	35		3.48	11.2		10.1		9.0	
	40		3.04	12.8		11.5		10.2	
	45		2.70	14.4		13.0		11.5	
	50		2.43	16.0		14.4		12.8	
	55		2.21	17.6		15.8		14.1	
	60		2.03	19.2		17.3		15.4	
	65		1.87	20.8		18.7		16.6	
	70		1.74	22.4		20.2		17.9	
	75		1.62	24.0		21.6		19.2	
	80		1.52	25.6		23.0		20.5	
	90		1.35	28.8		25.9		23.0	
	100		1.22	32.0		28.8		25.6	
	125		0.97	40.0		36.0		32.0	
16	20	8	7.93	6.4	500 (51)	5.8	450 (46)	5.1	400 (41)
	25		6.39	8.0		7.2		6.4	
	30		5.32	9.6		8.6		7.7	
	35		4.55	11.2		10.1		9.0	
	40		3.98	12.8		11.5		10.2	
	45		3.54	14.4		13.0		11.5	
	50		3.18	16.0		14.4		12.8	
	55		2.89	17.6		15.8		14.1	
	60		2.65	19.2		17.3		15.4	
	65		2.45	20.8		18.7		16.6	
	70		2.27	22.4		20.2		17.9	
	75		2.11	24.0		21.6		19.2	
	80		1.99	25.6		23.0		20.5	
	90		1.77	28.8		25.9		23.0	
	100		1.59	32.0		28.8		25.6	
	125		1.28	40.0		36.0		32.0	

สปริงแม่พิมพ์

Medium Load Spring - สปริงรับแรงกดที่มีค่าปานกลาง

ORDER EXAMPLE | Model D - L | 19SM25-050

สปริงสีแดง
Red Spring
Model: 19SM

Spring Load Chart
Light ← → Heavy

OIL FREE™ ACORE

D	L	d	Spring Constant (kgf/mm)	300,000 times		500,000 times		1,000,000 times	
				32% Deflection	Load N (kgf)	28.8% Deflection	Load N (kgf)	25.6% Deflection	Load N (kgf)
18	20	9	10.00	6.4	637 (65)	5.8	574 (59)	5.1	510 (52)
	25		8.12	8.0		7.2		6.4	
	30		6.77	9.6		8.6		7.7	
	35		5.80	11.2		10.1		9.0	
	40		5.07	12.8		11.5		10.2	
	45		4.51	14.4		13.0		11.5	
	50		4.06	16.0		14.4		12.8	
	55		3.69	17.6		15.8		14.1	
	60		3.38	19.2		17.3		15.4	
	65		3.12	20.8		18.7		16.6	
	70		2.90	22.4		20.2		17.9	
	75		2.70	24.0		21.6		19.2	
	80		2.53	25.6		23.0		20.5	
	90		2.25	28.8		25.9		23.0	
	100		2.02	32.0		28.8		25.6	
	125		1.62	40.0		36.0		32.0	
20	20	10	12.41	6.4	784 (80)	5.8	706 (72)	5.1	628 (64)
	25		10.00	8.0		7.2		6.4	
	30		8.33	9.6		8.6		7.7	
	35		7.14	11.2		10.1		9.0	
	40		6.25	12.8		11.5		10.2	
	45		5.55	14.4		13.0		11.5	
	50		5.00	16.0		14.4		12.8	
	55		4.54	17.6		15.8		14.1	
	60		4.16	19.2		17.3		15.4	
	65		3.84	20.8		18.7		16.6	
	70		3.57	22.4		20.2		17.9	
	75		3.33	24.0		21.6		19.2	
	80		3.12	25.6		23.0		20.5	
	90		2.77	28.8		25.9		23.0	
	100		2.50	32.0		28.8		25.6	
	125		2.00	40.0		36.0		32.0	
	150		1.67	48.0		43.2		38.4	
	175		1.43	56.0		50.4		44.8	
22	25	11	12.13	8.0	951 (97)	7.2	856 (87)	6.4	761 (78)
	30		10.10	9.6		8.6		7.7	
	35		8.65	11.2		10.1		9.0	
	40		7.57	12.8		11.5		10.2	
	45		6.74	14.4		13.0		11.5	
	50		6.06	16.0		14.4		12.8	
	55		5.50	17.6		15.8		14.1	
	60		5.05	19.2		17.3		15.4	
	65		4.66	20.8		18.7		16.6	
	70		4.33	22.4		20.2		17.9	
	75		4.04	24.0		21.6		19.2	
	80		3.78	25.6		23.0		20.5	
	90		3.36	28.8		25.9		23.0	
	100		3.03	32.0		28.8		25.6	
	125		2.42	40.0		36.0		32.0	
	150		2.01	48.0		43.2		38.4	
	175		1.73	56.0		50.4		44.8	

SUN RISE technologies
Tel: +662-324-3184-(89) Fax: +662-324-3190 / +662-324-3103
Website: www.sunrisegr.com Email: sale@sunrisegr.com

Medium Load Spring - สปริงรับแรงกดที่มีค่าปานกลาง

ORDER EXAMPLE | Model | D - L | 19SM25-050

สปริงสีแดง
Red Spring
Model: 19SM

Spring Load Chart
Light ← → Heavy

OIL FREE™ ACORE

D	L	d	Spring Constant (kgf/mm)	300,000 times		500,000 times		1,000,000 times	
				32% Deflection	Load N (kgf)	28.8% Deflection	Load N (kgf)	25.6% Deflection	Load N (kgf)
25	25	12.5	15.63	8.0	1225 (125)	7.2	1103 (113)	6.4	981 (100)
	30		13.02	9.6		8.6		7.7	
	35		11.20	11.2		10.1		9.0	
	40		9.76	12.8		11.5		10.2	
	45		8.68	14.4		13.0		11.5	
	50		7.81	16.0		14.4		12.8	
	55		7.10	17.6		15.8		14.1	
	60		6.51	19.2		17.3		15.4	
	65		6.00	20.8		18.7		16.6	
	70		5.58	22.4		20.2		17.9	
	75		5.21	24.0		21.6		19.2	
	80		4.88	25.6		23.0		20.5	
	90		4.34	28.8		25.9		23.0	
	100		3.90	32.0		28.8		25.6	
	125		3.12	40.0		36.0		32.0	
	150		2.60	48.0		43.2		38.4	
	175		2.23	56.0		50.4		44.8	
	200		1.95	64.0		57.6		51.2	
27	25	13.5	18.25	8.0	1431 (146)	7.2	1288 (131)	6.4	1145 (117)
	30		15.20	9.6		8.6		7.7	
	35		13.04	11.2		10.1		9.0	
	40		11.40	12.8		11.5		10.2	
	45		10.14	14.4		13.0		11.5	
	50		9.12	16.0		14.4		12.8	
	55		8.30	17.6		15.8		14.1	
	60		7.60	19.2		17.3		15.4	
	65		7.00	20.8		18.7		16.6	
	70		6.51	22.4		20.2		17.9	
	75		6.08	24.0		21.6		19.2	
	80		5.70	25.6		23.0		20.5	
	90		5.06	28.8		25.9		23.0	
	100		4.56	32.0		28.8		25.6	
	125		3.65	40.0		36.0		32.0	
	150		3.04	48.0		43.2		38.4	
	175		2.61	56.0		50.4		44.8	
	200		2.28	64.0		57.6		51.2	
30	25	15	22.50	8.0	1765 (180)	7.2	1589 (162)	6.4	1412 (144)
	30		18.75	9.6		8.6		7.7	
	35		16.10	11.2		10.1		9.0	
	40		14.06	12.8		11.5		10.2	
	45		12.50	14.4		13.0		11.5	
	50		11.25	16.0		14.4		12.8	
	55		10.23	17.6		15.8		14.1	
	60		9.37	19.2		17.3		15.4	
	65		8.65	20.8		18.7		16.6	
	70		8.03	22.4		20.2		17.9	
	75		7.50	24.0		21.6		19.2	
	80		7.03	25.6		23.0		20.5	
	90		6.25	28.8		25.9		23.0	
	100		5.62	32.0		28.8		25.6	
	125		4.50	40.0		36.0		32.0	
	150		3.75	48.0		43.2		38.4	
	175		3.21	56.0		50.4		44.8	
	200		2.81	64.0		57.6		51.2	

สปริงแม่พิมพ์

Medium Load Spring - สปริงรับแรงกดที่มีค่าปานกลาง

ORDER EXAMPLE | Model | D - L | 19SM25-050

สปริงสีแดง
Red Spring
Model: 19SM

Spring Load Chart
Light ← → Heavy

OIL FREE™ ACORE

D	L	d	Spring Constant (kgf/mm)	300,000 times		500,000 times		1,000,000 times	
				32% Deflection	Load N (kgf)	28.8% Deflection	Load N (kgf)	25.6% Deflection	Load N (kgf)
35	35	17.5	21.87	11.2	2401 (245)	10.1	2161 (220)	9.0	1921 (196)
	40		19.14	12.8		11.5		10.2	
	45		17.01	14.4		13.0		11.5	
	50		15.31	16.0		14.4		12.8	
	55		13.92	17.6		15.8		14.1	
	60		12.76	19.2		17.3		15.4	
	65		11.77	20.8		18.7		16.6	
	70		10.93	22.4		20.2		17.9	
	75		10.20	24.0		21.6		19.2	
	80		9.57	25.6		23.0		20.5	
	90		8.50	28.8		25.9		23.0	
	100		7.65	32.0		28.8		25.6	
	125		6.12	40.0		36.0		32.0	
	150		5.10	48.0		43.2		38.4	
	175		4.37	56.0		50.4		44.8	
	200		3.82	64.0		57.6		51.2	
40	40	20	25.02	12.8	3138 (320)	11.5	2824 (288)	10.2	2510 (256)
	45		22.26	14.4		13.0		11.5	
	50		20.00	16.0		14.4		12.8	
	55		18.15	17.6		15.8		14.1	
	60		16.60	19.2		17.3		15.4	
	65		15.40	20.8		18.7		16.6	
	70		14.28	22.4		20.2		17.9	
	75		13.34	24.0		21.6		19.2	
	80		12.50	25.6		23.0		20.5	
	90		11.11	28.8		25.9		23.0	
	100		10.00	32.0		28.8		25.6	
	125		8.00	40.0		36.0		32.0	
	150		6.66	48.0		43.2		38.4	
	175		5.71	56.0		50.4		44.8	
	200		5.00	64.0		57.6		51.2	
	225		4.44	72.0		64.8		57.6	
	250		4.00	80.0		72.0		64.0	
	275		3.64	88.0		79.2		70.4	
	300		3.33	96.0		86.4		76.8	
50	50	25	31.25	16.0	4900 (500)	14.4	4410 (450)	12.8	3920 (400)
	55		28.41	17.6		15.8		14.1	
	60		26.04	19.2		17.3		15.4	
	65		24.04	20.8		18.7		16.6	
	70		22.32	22.4		20.2		17.9	
	75		20.83	24.0		21.6		19.2	
	80		19.53	25.6		23.0		20.5	
	90		17.36	28.8		25.9		23.0	
	100		15.62	32.0		28.8		25.6	
	125		12.50	40.0		36.0		32.0	
	150		10.41	48.0		43.2		38.4	
	175		8.92	56.0		50.4		44.8	
	200		7.81	64.0		57.6		51.2	
	225		6.94	72.0		64.8		57.6	
	250		6.25	80.0		72.0		64.0	
	275		5.68	88.0		79.2		70.4	
	300		5.20	96.0		86.4		76.8	
	350		4.46	112.0		100.8		89.6	

Tel: +662-324-3184-(89) Fax: +662-324-3190 / +662-324-3103
Website: www.sunrisegr.com Email: sale@sunrisegr.com

Medium Load Spring - สปริงรับแรงกดที่มีค่าปานกลาง

ORDER EXAMPLE | Model D - L | 19SM25-050

สปริงสีแดง
Red Spring
Model: 19SM

Spring Load Chart
Light ← → Heavy

OIL FREE™ ACORE

D	L	d	Spring Constant (kgf/mm)	300,000 times		500,000 times		1,000,000 times	
				32% Deflection	Load N (kgf)	28.8% Deflection	Load N (kgf)	25.6% Deflection	Load N (kgf)
60	60	30	37.40	19.2	7056 (720)	17.3	6350 (648)	15.4	5645 (576)
	70		32.10	22.4		20.2		17.9	
	80		28.12	25.6		23.0		20.5	
	90		25.00	28.8		25.9		23.0	
	100		22.50	32.0		28.8		25.6	
	125		18.00	40.0		36.0		32.0	
	150		15.00	48.0		43.2		38.4	
	175		12.85	56.0		50.4		44.8	
	200		11.25	64.0		57.6		51.2	
	225		10.00	72.0		64.8		57.6	
	250		9.00	80.0		72.0		64.0	
	275		8.18	88.0		79.2		70.4	
	300		7.50	96.0		86.4		76.8	
	350		6.43	112.0		100.8		89.6	
70	70	38.5	37.9	22.4	8330 (850)	20.2	7497 (764)	17.9	6664 (680)
	80		33.2	25.6		23.0		20.5	
	90		29.5	28.8		25.9		23.0	
	100		26.6	32.0		28.8		25.6	
	125		21.3	40.0		36.0		32.0	
	150		17.7	48.0		43.2		38.4	
	175		15.2	56.0		50.4		44.8	
	200		13.3	64.0		57.6		51.2	
	225		11.8	72.0		64.8		57.6	
	250		10.6	80.0		72.0		64.0	
	275		9.7	88.0		79.2		70.4	
	300		8.9	96.0		86.4		76.8	
	350		7.6	112.0		100.8		89.6	

สปริงแม่พิมพ์

Heavy Load Spring - สปริงรับแรงกดที่มีค่าสูง

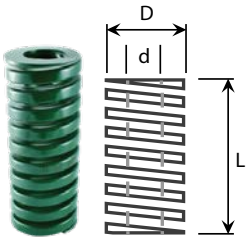

สปริงสีเขียวเข้ม
Dark Green Spring
Model: 19SH

OIL FREE™ CORE

Spring Load Chart

Light ← → Heavy

แรงกด Load	±10%
ความได้ฉาก Perpendicularity	2° or less
ระยะเผื่อความยาว Free Length	≤ 50 ±0.5mm ≥ 55 ±1

ORDER EXAMPLE | Model | D - L | 19SH25-050

SAE9245

JIS Standard

D	L	d	Spring Constant (kgf/mm)	300,000 times		500,000 times		1,000,000 times	
				24% Deflection	Load N (kgf)	21.6% Deflection	Load N (kgf)	19.5% Deflection	Load N (kgf)
6	15	3	3.90	3.6	137 (14)	3.2	123 (13)	2.9	110 (11)
	20		2.90	4.8		4.3		3.8	
	25		2.30	6.0		5.4		4.8	
	30		1.90	7.2		6.5		5.8	
	35		1.70	8.4		7.6		6.7	
	40		1.50	9.6		8.6		7.7	
	45		1.30	10.8		9.7		8.6	
	50		1.20	12.0		10.8		9.6	
	55		1.10	13.2		11.9		10.6	
	60		1.00	14.4		13.0		11.5	
8	10	4	8.80	2.4	206 (21)	2.2	185 (19)	1.9	165 (17)
	15		5.86	3.6		3.2		2.9	
	20		4.40	4.8		4.3		3.8	
	25		3.52	6.0		5.4		4.8	
	30		2.93	7.2		6.5		5.8	
	35		2.51	8.4		7.6		6.7	
	40		2.20	9.6		8.6		7.7	
	45		1.95	10.8		9.7		8.6	
	50		1.76	12.0		10.8		9.6	
	55		1.60	13.2		11.9		10.6	
	60		1.47	14.4		13.0		11.5	
	65		1.35	15.6		14.0		12.5	
	70		1.26	16.8		15.1		13.4	
	75		1.17	18.0		16.2		14.4	
	80		1.10	19.2		17.3		15.4	
	90		0.98	21.6		19.4		17.3	
	100		0.87	24.0		21.6		19.2	
10	10	5	12.27	2.4	294 (30)	2.2	265 (27)	1.9	235 (24)
	15		8.18	3.6		3.3		2.9	
	20		6.25	4.8		4.3		3.8	
	25		5.00	6.0		5.4		4.8	
	30		4.16	7.2		6.5		5.8	
	35		3.57	8.4		7.6		6.7	
	40		3.15	9.6		8.6		7.7	
	45		2.77	10.8		9.7		8.6	
	50		2.50	12.0		10.8		9.6	
	55		2.27	13.2		11.9		10.6	
	60		2.08	14.4		13.0		11.5	
	65		1.92	15.6		14.0		12.5	
	70		1.79	16.8		15.1		13.4	
	75		1.67	18.0		16.2		14.4	
	80		1.56	19.2		17.3		15.4	
	90		1.39	21.6		19.4		17.3	
	100		1.25	24.0		21.6		19.2	
	125		1.00	30.0		27.0		24.0	

SUN RISE technologies
Tel: +662-324-3184-(89) Fax: +662-324-3190 / +662-324-3103
Website: www.sunrisegr.com Email: sale@sunrisegr.com

Heavy Load Spring - สปริงรับแรงกดที่มีค่าสูง

ORDER EXAMPLE | Model | D - L | 19SH25-050

สปริงสีเขียวเข้ม
Dark Green Spring
Model: 19SH

Spring Load Chart
Light ← → Heavy

OIL FREE™ ACORE

D	L	d	Spring Constant (kgf/mm)	300,000 times		500,000 times		1,000,000 times	
				24% Deflection	Load N (kgf)	21.6% Deflection	Load N (kgf)	19.5% Deflection	Load N (kgf)
12	20	6	8.90	4.8	421 (43)	4.3	379 (38)	3.8	337 (34)
	25		7.10	6.0		5.4		4.8	
	30		5.97	7.2		6.5		5.8	
	35		5.11	8.4		7.6		6.7	
	40		4.47	9.6		8.6		7.7	
	45		3.98	10.8		9.7		8.6	
	50		3.58	12.0		10.8		9.6	
	55		3.25	13.2		11.9		10.6	
	60		2.98	14.4		13.0		11.5	
	65		2.74	15.6		14.0		12.5	
	70		2.54	16.8		15.1		13.4	
	75		2.37	18.0		16.2		14.4	
	80		2.21	19.2		17.3		15.4	
	90		1.98	21.6		19.4		17.3	
	100		1.78	24.0		21.6		19.2	
	125		1.42	30.0		27.0		24.0	
14	20	7	12.05	4.8	578 (59)	4.4	520 (53)	3.8	462 (47)
	25		9.83	6.0		5.4		4.8	
	30		8.19	7.2		6.5		5.8	
	35		7.02	8.4		7.6		6.7	
	40		6.14	9.6		8.6		7.7	
	45		5.46	10.8		9.7		8.6	
	50		4.91	12.0		10.8		9.6	
	55		4.46	13.2		11.9		10.6	
	60		4.09	14.4		13.0		11.5	
	65		3.78	15.6		14.0		12.5	
	70		3.51	16.8		15.1		13.4	
	75		3.27	18.0		16.2		14.4	
	80		3.07	19.2		17.3		15.4	
	90		2.72	21.6		19.4		17.3	
	100		2.46	24.0		21.6		19.2	
	125		1.97	30.0		27.0		24.0	
16	20	8	15.68	4.8	755 (77)	4.4	680 (690	3.8	604 (62)
	25		12.83	6.0		5.4		4.8	
	30		10.69	7.2		6.5		5.8	
	35		9.16	8.4		7.6		6.7	
	40		8.02	9.6		8.6		7.7	
	45		7.12	10.8		9.7		8.6	
	50		6.41	12.0		10.8		9.6	
	55		5.83	13.2		11.9		10.6	
	60		5.34	14.4		13.0		11.5	
	65		4.93	15.6		14.0		12.5	
	70		4.58	16.8		15.1		13.4	
	75		4.28	18.0		16.2		14.4	
	80		4.01	19.2		17.3		15.4	
	90		3.57	21.6		19.4		17.3	
	100		3.21	24.0		21.6		19.2	
	125		2.57	30.0		27.0		24.0	

Heavy Load Spring - สปริงรับแรงกดที่มีค่าสูง

ORDER EXAMPLE | Model | D - L | 19SH25-050

สปริงสีเขียวเข้ม
Dark Green Spring
Model: 19SH

Spring Load Chart
Light ← → Heavy

OIL FREE™ ACORE

D	L	d	Spring Constant (kgf/mm)	300,000 times		500,000 times		1,000,000 times	
				24% Deflection	Load N (kgf)	21.6% Deflection	Load N (kgf)	19.5% Deflection	Load N (kgf)
18	20	9	19.77	4.8	951 (97)	4.4	856 (87)	3.8	761 (78)
	25		16.16	6.0		5.4		4.8	
	30		13.47	7.2		6.5		5.8	
	35		11.54	8.4		7.6		6.7	
	40		10.10	9.6		8.6		7.7	
	45		8.98	10.8		9.7		8.6	
	50		8.08	12.0		10.8		9.6	
	55		7.34	13.2		11.9		10.6	
	60		6.73	14.4		13.0		11.5	
	65		6.21	15.6		14.0		12.5	
	70		5.77	16.8		15.1		13.4	
	75		5.39	18.0		16.2		14.4	
	80		5.05	19.2		17.3		15.4	
	90		4.50	21.6		19.4		17.3	
	100		4.04	24.0		21.6		19.2	
	125		3.23	30.0		27.0		24.0	
20	20	10	24.55	4.8	1176 (120)	4.4	1058 (108)	3.7	941 (96)
	25		20.00	6.0		5.4		4.8	
	30		16.66	7.2		6.5		5.8	
	35		14.28	8.4		7.6		6.7	
	40		12.50	9.6		8.6		7.7	
	45		11.11	10.8		9.7		8.6	
	50		10.00	12.0		10.8		9.6	
	55		9.09	13.2		11.9		10.6	
	60		8.33	14.4		13.0		11.5	
	65		7.69	15.6		14.0		12.5	
	70		7.14	16.8		15.1		13.4	
	75		6.67	18.0		16.2		14.4	
	80		6.25	19.2		17.3		15.4	
	90		5.55	21.6		19.4		17.3	
	100		5.00	24.0		21.6		19.2	
	125		4.00	30.0		27.0		24.0	
	150		3.33	36.0		32.4		28.8	
	175		2.86	42.0		37.8		33.6	
22	25	11	24.16	6.0	1421 (145)	5.4	1279 (130)	4.8	1137 (116)
	30		20.13	7.2		6.5		5.8	
	35		17.30	8.4		7.6		6.7	
	40		15.10	9.6		8.6		7.7	
	45		13.40	10.8		9.7		8.6	
	50		12.08	12.0		10.8		9.6	
	55		10.94	13.2		11.9		10.6	
	60		10.06	14.4		13.0		11.5	
	65		9.28	15.6		14.0		12.5	
	70		8.63	16.8		15.1		13.4	
	75		8.04	18.0		16.2		14.4	
	80		7.55	19.2		17.3		15.4	
	90		6.71	21.6		19.4		17.3	
	100		6.04	24.0		21.6		19.2	
	125		4.83	30.0		27.0		24.0	
	150		4.02	36.0		32.4		28.8	
	175		3.45	42.0		37.8		33.6	

Tel: +662-324-3184-(89) Fax: +662-324-3190 / +662-324-3103
Website: www.sunrisegr.com Email: sale@sunrisegr.com

Heavy Load Spring - สปริงรับแรงกดที่มีค่าสูง

ORDER EXAMPLE | Model | D - L | 19SH25-050

สปริงสีเขียวเข้ม
Dark Green Spring
Model: 19SH

Spring Load Chart
Light ← → Heavy

OIL FREE™ CORE

D	L	d	Spring Constant (kgf/mm)	300,000 times		500,000 times		1,000,000 times	
				24% Deflection	Load N (kgf)	21.6% Deflection	Load N (kgf)	19.5% Deflection	Load N (kgf)
25	25	12.5	31.20	6.0	1833 (187)	5.4	1650 (168)	4.8	1466 (150)
	30		25.97	7.2		6.5		5.8	
	35		22.38	8.4		7.6		6.7	
	40		19.47	9.6		8.6		7.7	
	45		17.40	10.8		9.7		8.6	
	50		15.58	12.0		10.8		9.6	
	55		14.20	13.2		11.9		10.6	
	60		12.98	14.4		13.0		11.5	
	65		12.00	15.6		14.0		12.5	
	70		11.13	16.8		15.1		13.4	
	75		10.40	18.0		16.2		14.4	
	80		9.73	19.2		17.3		15.4	
	90		8.65	21.6		19.4		17.3	
	100		7.79	24.0		21.6		19.2	
	125		6.23	30.0		27.0		24.0	
	150		5.20	36.0		32.4		28.8	
	175		4.46	42.0		37.8		33.6	
	200		3.90	48.0		43.2		38.4	
27	25	13.5	36.40	6.0	2146 (219)	5.4	1931 (197)	4.8	1717 (175)
	30		30.41	7.2		6.5		5.8	
	35		26.20	8.4		7.6		6.7	
	40		22.81	9.6		8.6		7.7	
	45		20.30	10.8		9.7		8.6	
	50		18.25	12.0		10.8		9.6	
	55		16.50	13.2		11.9		10.6	
	60		15.20	14.4		13.0		11.5	
	65		14.00	15.6		14.0		12.5	
	70		13.03	16.8		15.1		13.4	
	75		12.10	18.0		16.2		14.4	
	80		11.40	19.2		17.3		15.4	
	90		10.13	21.6		19.4		17.3	
	100		9.12	24.0		21.6		19.2	
	125		7.30	30.0		27.0		24.0	
	150		6.08	36.0		32.4		28.8	
	175		5.21	42.0		37.8		33.6	
	200		4.56	48.0		43.2		38.4	
30	25	15	45.00	6.0	2646 (270)	5.4	2381 (243)	4.8	2117 (216)
	30		37.50	7.2		6.5		5.8	
	35		32.26	8.4		7.6		6.7	
	40		28.12	9.6		8.6		7.7	
	45		25.00	10.8		9.7		8.6	
	50		22.50	12.0		10.8		9.6	
	55		20.40	13.2		11.9		10.6	
	60		18.75	14.4		13.0		11.5	
	65		17.30	15.6		14.0		12.5	
	70		16.07	16.8		15.1		13.4	
	75		15.00	18.0		16.2		14.4	
	80		14.06	19.2		17.3		15.4	
	90		12.50	21.6		19.4		17.3	
	100		11.25	24.0		21.6		19.2	
	125		9.00	30.0		27.0		24.0	
	150		7.50	36.0		32.4		28.8	
	175		6.42	42.0		37.8		33.6	
	200		5.62	48.0		43.2		38.4	

Heavy Load Spring - สปริงรับแรงกดที่มีค่าสูง

ORDER EXAMPLE | Model | D - L | 19SH25-050

สปริงสีเขียวเข้ม
Dark Green Spring
Model: 19SH

Spring Load Chart
Light ← → Heavy

OIL FREE™ ACORE

D	L	d	Spring Constant (kgf/mm)	300,000 times		500,000 times		1,000,000 times	
				24% Deflection	Load N (kgf)	21.6% Deflection	Load N (kgf)	19.5% Deflection	Load N (kgf)
35	35	17.5	43.68	8.4	3597 (367)	7.6	3237 (330)	6.7	2878 (293)
	40		38.22	9.6		8.6		7.7	
	45		33.98	10.8		9.7		8.6	
	50		30.58	12.0		10.8		9.6	
	55		27.80	13.2		11.9		10.6	
	60		25.48	14.4		13.0		11.5	
	65		23.53	15.6		14.0		12.5	
	70		21.84	16.8		15.1		13.4	
	75		20.39	18.0		16.2		14.4	
	80		19.11	19.2		17.3		15.4	
	90		16.99	21.6		19.4		17.3	
	100		15.29	24.0		21.6		19.2	
	125		12.23	30.0		27.0		24.0	
	150		10.19	36.0		32.4		28.8	
	175		8.73	42.0		37.8		33.6	
	200		7.64	48.0		43.2		38.4	
40	40	20	50.00	9.6	4704 (480)	8.6	4234 (432)	7.7	3763 (384)
	45		44.44	10.8		9.7		8.6	
	50		40.00	12.0		10.8		9.6	
	55		36.36	13.2		11.9		10.6	
	60		33.33	14.4		13.0		11.5	
	65		30.77	15.6		14.0		12.5	
	70		28.57	16.8		15.1		13.4	
	75		26.67	18.0		16.2		14.4	
	80		25.00	19.2		17.3		15.4	
	90		22.22	21.6		19.4		17.3	
	100		20.00	24.0		21.6		19.2	
	125		16.00	30.0		27.0		24.0	
	150		13.33	36.0		32.4		28.8	
	175		11.42	42.0		37.8		33.6	
	200		10.00	48.0		43.2		38.4	
	225		8.89	54.0		48.6		43.2	
	250		8.00	60.0		54.0		48.0	
	275		7.27	66.0		59.4		52.8	
	300		6.67	72.0		64.8		57.6	
50	50	25	62.50	12.0	7350 (750)	10.8	6615 (675)	9.6	5880 (600)
	55		56.82	13.2		11.9		10.6	
	60		52.08	14.4		13.0		11.5	
	65		48.08	15.6		14.0		12.5	
	70		44.64	16.8		15.1		13.4	
	75		41.67	18.0		16.2		14.4	
	80		39.06	19.2		17.3		15.4	
	90		34.72	21.6		19.4		17.3	
	100		31.25	24.0		21.6		19.2	
	125		25.00	30.0		27.0		24.0	
	150		20.83	36.0		32.4		28.8	
	175		17.85	42.0		37.8		33.6	
	200		15.62	48.0		43.2		38.4	
	225		13.89	54.0		48.6		43.2	
	250		12.50	60.0		54.0		48.0	
	275		11.36	66.0		59.4		52.8	
	300		10.41	72.0		64.8		57.6	
	350		8.93	84.0		75.6		67.2	

SUN RISE technologies
Tel: +662-324-3184-(89) Fax: +662-324-3190 / +662-324-3103
Website: www.sunrisegr.com Email: sale@sunrisegr.com

Heavy Load Spring - สปริงรับแรงกดที่มีค่าสูง

ORDER EXAMPLE | Model | D - L | 19SH25-050

สปริงสีเขียวเข้ม
Dark Green Spring
Model: 19SH

Spring Load Chart
Light ← → Heavy

OIL FREE™ CORE

D	L	d	Spring Constant (kgf/mm)	300,000 times		500,000 times		1,000,000 times	
				24% Deflection	Load N (kgf)	21.6% Deflection	Load N (kgf)	19.5% Deflection	Load N (kgf)
60	60	30	75.00	14.4	10584 (1079)	13.0	9526 (971)	11.5	8467 (863)
	70		64.28	16.8		15.1		13.4	
	80		56.25	19.2		17.3		15.4	
	90		50.00	21.6		19.4		17.3	
	100		45.00	24.0		21.6		19.2	
	125		36.00	30.0		27.0		24.0	
	150		30.00	36.0		32.4		28.8	
	175		25.71	42.0		37.8		33.6	
	200		22.50	48.0		43.2		38.4	
	225		20.00	54.0		48.6		43.2	
	250		18.00	60.0		54.0		48.0	
	275		16.36	66.0		59.4		52.8	
	300		15.00	72.0		64.8		57.6	
	350		12.86	84.0		75.6		67.2	
70	70	38.5	76.2	16.8	12557 (1280)	15.1	11301 (1152)	13.4	10046 (1024)
	80		66.7	19.2		17.3		15.4	
	90		59.3	21.6		19.4		17.3	
	100		53.3	24.0		21.6		19.2	
	125		42.7	30.0		27.0		24.0	
	150		35.6	36.0		32.4		28.8	
	175		30.5	42.0		37.8		33.6	
	200		26.7	48.0		43.2		38.4	
	225		23.7	54.0		48.6		43.2	
	250		21.3	60.0		54.0		48.0	
	275		19.4	66.0		59.4		52.8	
	300		17.8	72.0		64.8		57.6	
	350		15.2	84.0		75.6		67.2	

สปริงแม่พิมพ์

Extra Heavy Load Spring - สปริงรับแรงกดที่มีค่าสูงพิเศษ

OIL FREE™ ACORE



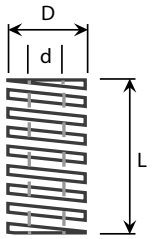

สปริงสีน้ำตาล
Brown Spring
Model: 19SB

Spring Load Chart

Light ← → Heavy

แรงกด Load	±10%
ความได้ฉาก Perpendicularity	2° or less
ระยะเผื่อความยาว Free Length	≤ 50 ±0.5mm ≥ 55 ±1

ORDER EXAMPLE — Model: D - L — 19SB25-050

SAE9245

JIS Standard

D	L	d	Spring Constant (kgf/mm)	300,000 times		500,000 times		1,000,000 times	
				20% Deflection	Load N (kgf)	18% Deflection	Load N (kgf)	16% Deflection	Load N (kgf)
6	15	3	6.00	3.0	177 (18)	2.7	159 (16.2)	2.4	141 (14.4)
	20		4.50	4.0		3.6		3.2	
	25		3.60	5.0		4.5		4.0	
	30		3.00	6.0		5.4		4.8	
	35		2.60	7.0		6.3		5.6	
	40		2.30	8.0		7.2		6.4	
	45		2.00	9.0		8.1		7.2	
	50		1.80	10.0		9.0		8.0	
	55		1.60	11.0		9.9		8.8	
	60		1.50	12.0		10.8		9.6	
8	10	4	16.94	2.0	324 (33)	1.8	294 (30)	1.6	255 (26)
	15		11.30	3.0		2.7		2.4	
	20		8.47	4.0		3.6		3.2	
	25		6.78	5.0		4.5		4.0	
	30		5.65	6.0		5.4		4.8	
	35		4.84	7.0		6.3		5.6	
	40		4.24	8.0		7.2		6.4	
	45		3.77	9.0		8.1		7.2	
	50		3.39	10.0		9.0		8.0	
	55		3.08	11.0		9.9		8.8	
	60		2.82	12.0		10.8		9.6	
	65		2.61	13.0		11.7		10.4	
	70		2.42	14.0		12.6		11.2	
	75		2.26	15.0		13.5		12.0	
	80		2.12	16.0		14.4		12.8	
	90		1.88	18.0		16.2		14.4	
	100		1.65	20.0		18.0		16.0	
10	10	5	22.78	2.0	441 (45)	1.8	402 (41)	1.6	353 (36)
	15		15.19	3.0		2.7		2.4	
	20		11.25	4.0		3.6		3.2	
	25		9.00	5.0		4.5		4.0	
	30		7.50	6.0		5.4		4.8	
	35		6.43	7.0		6.3		5.6	
	40		5.63	8.0		7.2		6.4	
	45		5.00	9.0		8.1		7.2	
	50		4.50	10.0		9.0		8.0	
	55		4.09	11.0		9.9		8.8	
	60		3.75	12.0		10.8		9.6	
	65		3.47	13.0		11.7		10.4	
	70		3.21	14.0		12.6		11.2	
	75		3.00	15.0		13.5		12.0	
	80		2.82	16.0		14.4		12.8	
	90		2.50	18.0		16.2		14.4	
	100		2.25	20.0		18.0		16.0	
	125		1.80	25.0		22.5		20.0	

SUN RISE technologies
Tel: +662-324-3184-(89) Fax: +662-324-3190 / +662-324-3103
Website: www.sunrisegr.com Email: sale@sunrisegr.com

Extra Heavy Load Spring - สปริงรับแรงกดที่มีค่าสูงพิเศษ

ORDER EXAMPLE: Model D - L 19SB25-050

สปริงสีน้ำตาล
Brown Spring
Model: 19SB

Spring Load Chart
Light ← → Heavy

OIL FREE™ ACORE

D	L	d	Spring Constant (kgf/mm)	300,000 times		500,000 times		1,000,000 times	
				20% Deflection	Load N (kgf)	18% Deflection	Load N (kgf)	16% Deflection	Load N (kgf)
12	20	6	14.50	4.0	569 (58)	3.6	510 (52)	3.2	451 (46)
	25		11.60	5.0		4.5		4.0	
	30		9.67	6.0		5.4		4.8	
	35		8.29	7.0		6.3		5.6	
	40		7.25	8.0		7.2		6.4	
	45		6.44	9.0		8.1		7.2	
	50		5.80	10.0		9.0		8.0	
	55		5.27	11.0		9.9		8.8	
	60		4.83	12.0		10.8		9.6	
	65		4.44	13.0		11.7		10.4	
	70		4.13	14.0		12.6		11.2	
	75		3.85	15.0		13.5		12.0	
	80		3.61	16.0		14.4		12.8	
	90		3.22	18.0		16.2		14.4	
	100		2.90	20.0		18.0		16.0	
	125		2.30	25.0		22.5		20.0	
14	20	7	18.89	4.0	736 (75)	3.6	667 (68)	3.2	589 (60)
	25		15.00	5.0		4.5		4.0	
	30		12.50	6.0		5.4		4.8	
	35		10.72	7.0		6.3		5.6	
	40		9.38	8.0		7.2		6.4	
	45		8.34	9.0		8.1		7.2	
	50		7.50	10.0		9.0		8.0	
	55		6.82	11.0		9.9		8.8	
	60		6.25	12.0		10.8		9.6	
	65		5.77	13.0		11.7		10.4	
	70		5.36	14.0		12.6		11.2	
	75		5.00	15.0		13.5		12.0	
	80		4.69	16.0		14.4		12.8	
	90		4.17	18.0		16.2		14.4	
	100		3.75	20.0		18.0		16.0	
	125		3.00	25.0		22.5		20.0	
16	20	8	25.00	4.0	981 (100)	3.6	883 (90)	3.2	785 (80)
	25		20.00	5.0		4.5		4.0	
	30		16.67	6.0		5.4		4.8	
	35		14.29	7.0		6.3		5.6	
	40		12.50	8.0		7.2		6.4	
	45		11.11	9.0		8.1		7.2	
	50		10.00	10.0		9.0		8.0	
	55		9.09	11.0		9.9		8.8	
	60		8.34	12.0		10.8		9.6	
	65		7.69	13.0		11.7		10.4	
	70		7.14	14.0		12.6		11.2	
	75		6.67	15.0		13.5		12.0	
	80		6.25	16.0		14.4		12.8	
	90		5.56	18.0		16.2		14.4	
	100		5.00	20.0		18.0		16.0	
	125		4.00	25.0		22.5		20.0	
18	20	9	31.39	4.0	1226 (125)	3.6	1108 (113)	3.2	981 (100)
	25		25.00	5.0		4.5		4.0	
	30		20.84	6.0		5.4		4.8	
	35		17.86	7.0		6.3		5.6	
	40		15.63	80.0		7.2		6.4	
	45		13.89	90.0		8.1		7.2	
	50		12.50	10.0		9.0		8.0	
	55		11.37	11.0		9.9		8.8	
	60		10.42	12.0		10.8		9.6	
	65		9.62	13.0		11.7		10.4	
	70		8.93	14.0		12.6		11.2	
	75		8.34	15.0		13.5		12.0	
	80		7.82	16.0		14.4		12.8	
	90		6.95	18.0		16.2		14.4	
	100		6.26	50.0		18.0		16.0	
	125		5.00	25.0		22.5		20.0	

Extra Heavy Load Spring - สปริงรับแรงกดที่มีค่าสูงพิเศษ

ORDER EXAMPLE | Model | D - L | 19SB25-050

สปริงสีน้ำตาล
Brown Spring
Model: 19SB

Spring Load Chart
Light ← → Heavy

OIL FREE™ ACORE

D	L	d	Spring Constant (kgf/mm)	300,000 times		500,000 times		1,000,000 times	
				20% Deflection	Load N (kgf)	18% Deflection	Load N (kgf)	16% Deflection	Load N (kgf)
20	20	10	40.00	4.0	1569 (160)	3.6	1412 (144)	3.2	1255 (128)
	25		32.00	5.0		4.5		4.0	
	30		26.67	6.0		5.4		4.8	
	35		22.86	7.0		6.3		5.6	
	40		20.00	8.0		7.2		6.4	
	45		17.78	9.0		8.1		7.2	
	50		16.00	10.0		9.0		8.0	
	55		14.55	11.0		9.9		8.8	
	60		13.33	12.0		10.8		9.6	
	65		12.31	13.0		11.7		10.4	
	70		11.43	14.0		12.6		11.2	
	75		10.67	15.0		13.5		12.0	
	80		10.00	16.0		14.4		12.8	
	90		8.89	18.0		16.2		14.4	
	100		8.00	20.0		18.0		16.0	
	125		6.40	25.0		22.5		20.0	
	150		5.33	30.0		27.0		24.0	
	175		4.57	35.0		31.5		28.0	
22	25	11	39.00	5.0	1912 (195)	4.5	1726 (176)	4.0	1530 (156)
	30		32.50	6.0		5.4		4.8	
	35		27.86	7.0		6.3		5.6	
	40		24.38	8.0		7.2		6.4	
	45		21.67	9.0		8.1		7.2	
	50		19.50	10.0		9.0		8.0	
	55		17.73	11.0		9.9		8.8	
	60		16.25	12.0		10.8		9.6	
	65		15.00	13.0		11.7		10.4	
	70		13.93	14.0		12.6		11.2	
	75		13.00	15.0		13.5		12.0	
	80		12.19	16.0		14.4		12.8	
	90		10.83	18.0		16.2		14.4	
	100		9.75	20.0		18.0		16.0	
	125		7.80	25.0		22.5		20.0	
	150		6.50	30.0		27.0		24.0	
	175		5.57	35.0		31.5		28.0	
25	25	12.5	49.00	5.0	2403 (245)	4.5	2167 (221)	4.0	1922 (196)
	30		40.80	6.0		5.4		4.8	
	35		35.00	7.0		6.3		5.6	
	40		30.60	8.0		7.2		6.4	
	45		27.20	9.0		8.1		7.2	
	50		24.50	10.0		9.0		8.0	
	55		22.30	11.0		9.9		8.8	
	60		20.40	12.0		10.8		9.6	
	65		18.80	13.0		11.7		10.4	
	70		17.50	14.0		12.6		11.2	
	75		16.30	15.0		13.5		12.0	
	80		15.30	16.0		14.4		12.8	
	90		13.60	18.0		16.2		14.4	
	100		12.30	20.0		18.0		16.0	
	125		9.80	25.0		22.5		20.0	
	150		8.17	30.0		27.0		24.0	
	175		7.00	35.0		31.5		28.0	
	200		6.13	40.0		36.0		32.0	

Tel: +662-324-3184-(89) Fax: +662-324-3190 / +662-324-3103
Website: www.sunrisegr.com Email: sale@sunrisegr.com

Extra Heavy Load Spring - สปริงรับแรงกดที่มีค่าสูงพิเศษ

ORDER EXAMPLE Model D - L 19SB25-050

สปริงสีน้ำตาล
Brown Spring
Model: 19SB

Spring Load Chart
Light ← → Heavy

OIL FREE™ ACORE

D	L	d	Spring Constant (kgf/mm)	300,000 times		500,000 times		1,000,000 times	
				20% Deflection	Load N (kgf)	18% Deflection	Load N (kgf)	16% Deflection	Load N (kgf)
27	25	13.5	58.00	5.0	2844 (290)	4.5	2560 (261)	4.0	2275 (232)
	30		48.33	6.0		5.4		4.8	
	35		41.43	7.0		6.3		5.6	
	40		36.25	8.0		7.2		6.4	
	45		32.22	9.0		8.1		7.2	
	50		29.00	10.0		9.0		8.0	
	55		26.36	11.0		9.9		8.8	
	60		24.17	12.0		10.8		9.6	
	65		22.31	13.0		11.7		10.4	
	70		20.71	14.0		12.6		11.2	
	75		19.33	15.0		13.5		12.0	
	80		18.13	16.0		14.4		12.8	
	90		16.11	18.0		16.2		14.4	
	100		14.50	20.0		18.0		16.0	
	125		11.60	25.0		22.5		120.0	
	150		9.67	30.0		27.0		24.0	
	175		8.28	35.0		31.5		28.0	
	200		7.25	40.0		36.0		32.0	
30	25	15	72.00	5.0	3530 (360)	4.5	3177 (324)	4.0	2824 (288)
	30		60.00	6.0		5.4		4.8	
	35		51.43	7.0		6.3		5.6	
	40		45.00	8.0		7.2		6.4	
	45		40.00	9.0		8.1		7.2	
	50		36.00	10.0		9.0		8.0	
	55		32.72	11.0		9.9		8.8	
	60		30.00	12.0		10.8		9.6	
	65		27.69	13.0		11.7		10.4	
	70		25.71	14.0		12.6		11.2	
	75		24.00	15.0		13.5		12.0	
	80		22.50	16.0		14.4		12.8	
	90		20.00	18.0		16.2		14.4	
	100		18.00	20.0		18.0		16.0	
	125		14.40	25.0		22.5		20.0	
	150		12.00	30.0		27.0		24.0	
	175		10.28	35.0		31.5		28.0	
	200		9.00	40.0		36.0		32.0	
35	35	17.5	569.94	7.0	4805 (490)	6.3	4325 (441)	5.6	3844 (392)
	40		61.25	8.0		7.2		6.4	
	45		54.44	90.0		8.1		7.2	
	50		49.00	10.0		9.0		8.0	
	55		44.54	11.0		9.9		8.8	
	60		40.83	12.0		10.8		9.6	
	65		37.69	13.0		11.7		10.4	
	70		35.00	14.0		12.6		11.2	
	75		32.67	15.0		13.5		12.0	
	80		30.62	16.0		14.4		12.8	
	90		27.22	18.0		16.2		14.4	
	100		24.50	20.0		18.0		16.0	
	125		19.60	25.0		22.5		20.0	
	150		16.33	30.0		27.0		24.0	
	175		14.00	35.0		31.5		28.0	
	200		12.25	40.0		36.0		32.0	

Extra Heavy Load Spring - สปริงรับแรงกดที่มีค่าสูงพิเศษ

ORDER EXAMPLE | Model | D - L | 19SB25-050

สปริงสีน้ำตาล
Brown Spring
Model: 19SB

Spring Load Chart
Light ← → Heavy

OIL FREE™ ACORE

D	L	d	Spring Constant (kgf/mm)	300,000 times		500,000 times		1,000,000 times	
				20% Deflection	Load N (kgf)	18% Deflection	Load N (kgf)	16% Deflection	Load N (kgf)
40	40	20	80.00	8.0	6276 (640)	7.2	5649 (576)	6.4	5021 (512)
	45		71.11	9.0		8.1		7.2	
	50		64.00	10.0		9.0		8.0	
	55		58.18	11.0		9.9		9.8	
	60		53.33	12.0		10.8		9.6	
	65		49.23	13.0		11.7		10.4	
	70		45.71	14.0		12.6		11.2	
	75		12.67	15.0		13.5		12.0	
	80		40.00	16.0		14.4		12.8	
	90		35.55	18.0		16.2		14.4	
	100		32.00	20.0		18.0		16.0	
	125		25.60	25.0		22.5		20.0	
	150		21.33	30.0		27.0		24.0	
	175		18.28	35.0		31.5		28.0	
	200		16.00	40.0		36.0		32.0	
	225		14.22	45.0		40.5		36.0	
	250		12.80	50.0		45.0		40.0	
	275		11.64	55.0		49.5		44.0	
	300		10.67	60.0		54.0		48.0	
50	50	25	100.00	10.0	9807 (1000)	9.0	8826 (900)	8.0	7845 (800)
	55		90.91	11.0		9.9		8.8	
	60		83.33	12.0		10.8		9.6	
	65		76.92	13.0		11.7		10.4	
	70		71.42	14.0		12.6		11.2	
	75		66.67	15.0		13.5		12.0	
	80		62.50	16.0		14.4		12.8	
	90		55.55	18.0		16.2		14.4	
	100		50.00	20.0		18.0		16.0	
	125		40.00	25.0		22.5		20.0	
	150		33.33	30.0		27.0		24.0	
	175		28.57	35.0		31.5		28.0	
	200		25.00	40.0		36.0		32.0	
	225		22.22	45.0		40.5		36.0	
	250		20.00	50.0		45.0		40.0	
	275		18.18	55.0		49.5		44.0	
	300		16.66	60.0		54.0		48.0	
	350		14.29	70.0		63.0		56.0	
60	60	30	120.00	12.0	14122 (1440)	10.8	12709 (1296)	9.6	11297 (1152)
	70		102.86	14.0		12.6		11.2	
	80		90.00	16.0		14.4		12.8	
	90		80.00	18.0		16.2		14.4	
	100		72.00	20.0		18.0		16.0	
	125		57.60	25.0		22.5		20.0	
	150		48.00	30.0		27.0		24.0	
	175		41.14	35.0		31.5		28.0	
	200		36.00	40.0		36.0		32.0	
	225		32.00	45.0		40.5		36.0	
	250		28.80	50.0		45.0		40.0	
	275		26.18	55.0		49.5		44.0	
	300		24.00	60.0		54.0		48.0	
	350		20.57	70.0		63.0		56.0	
70	70	38.5	124.3	14.0	17652 (1800)	12.6	15887 (1620)	11.2	14122 (1440)
	80		108.8	16.0		14.4		12.8	
	90		96.7	18.0		16.2		14.4	
	100		87.0	20.0		18.0		16.0	
	125		69.6	25.0		22.5		20.0	
	150		58.0	30.0		27.0		24.0	
	175		49.7	35.0		31.5		28.0	
	200		43.5	40.0		36.0		32.0	
	225		38.7	45.0		40.5		36.0	
	250		34.8	50.0		45.0		40.0	
	275		31.6	55.0		49.5		44.0	
	300		29.0	60.0		54.0		48.0	
	350		24.9	70.0		63.0		56.0	

SUN RISE technologies
Tel: +662-324-3184-(89) Fax: +662-324-3190 / +662-324-3103
Website: www.sunrisegr.com Email: sale@sunrisegr.com

Super Heavy Load Spring - สปริงรับแรงกดที่มีค่าสูงมาก

OIL FREE™ CORE



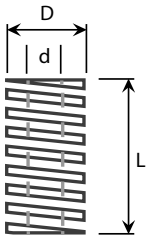

สปริงสีเทา
Grey Spring
Model: 19SG

Spring Load Chart

Light ← → Heavy

แรงกด Load	±10%
ความได้ฉาก Perpendicularity	2° or less
ระยะเผื่อความยาว Free Length	≤ 50 ±0.5mm ≥ 55 ±1

ORDER EXAMPLE — Model: D - L — 19SG25-050

M SAE9245

JIS Standard

D	L	d	Spring Constant (kgf/mm)	300,000 times		500,000 times		1,000,000 times	
				20% Deflection	Load N (kgf)	18% Deflection	Load N (kgf)	16% Deflection	Load N (kgf)
10	15	5	16.67	3.0	490 (50)	2.7	441 (45)	2.4	392 (40)
	20		12.50	4.0		3.6		3.2	
	25		10.00	5.0		4.5		4.0	
	30		8.33	6.0		5.4		4.8	
	35		7.14	7.0		6.3		5.6	
	40		6.25	8.0		7.2		6.4	
	45		5.56	9.0		8.1		7.2	
	50		5.00	10.0		9.0		8.0	
	55		4.55	11.0		9.9		8.8	
	60		4.17	12.0		10.8		9.6	
	65		3.85	13.0		11.7		10.4	
	70		3.57	14.0		12.6		11.2	
	75		3.33	15.0		13.5		12.0	
	80		3.13	16.0		14.4		12.8	
	90		2.78	18.0		16.2		14.4	
	100		2.50	20.0		18.0		16.0	
12	20	6	18.75	4.0	736 (75)	3.6	662 (67.5)	3.2	588 (60)
	25		15.00	5.0		4.5		4.0	
	30		12.50	6.0		5.4		4.8	
	35		10.71	7.0		6.3		5.6	
	40		9.38	8.0		7.2		6.4	
	45		8.33	9.0		8.1		7.2	
	50		7.50	10.0		9.0		8.0	
	55		6.82	11.0		9.9		8.8	
	60		6.25	12.0		10.8		9.6	
	65		5.77	13.0		11.7		10.4	
	70		5.36	14.0		12.6		11.2	
	75		5.00	15.0		13.5		12.0	
	80		4.69	16.0		14.4		12.8	
	90		4.17	18.0		16.2		14.4	
	100		3.75	20.0		18.0		16.0	
14	20	7	24.25	4.0	951 (97)	3.6	853 (87)	3.2	761 (77.6)
	25		19.40	50.0		4.5		4.0	
	30		16.17	6.0		5.4		4.8	
	35		13.86	7.0		6.3		5.6	
	40		12.13	8.0		7.2		6.4	
	45		10.78	9.0		8.1		7.2	
	50		9.70	10.0		9.0		8.0	
	55		8.82	11.0		9.9		8.8	
	60		8.08	12.0		10.8		9.6	
	65		7.46	13.0		11.7		10.4	
	70		6.93	14.0		12.6		11.2	
	75		6.47	15.0		13.5		12.0	
	80		6.06	16.0		14.4		12.8	
	90		5.39	18.0		16.2		14.4	
	100		4.85	20.0		18.0		16.0	

Super Heavy Load Spring - สปริงรับแรงกดที่มีค่าสูงมาก

ORDER EXAMPLE | Model D - L | 19SG25-050

สปริงสีเทา
Grey Spring
Model: 19SG

Spring Load Chart
Light ← → Heavy

OIL FREE™ ACORE

D	L	d	Spring Constant (kgf/mm)	300,000 times		500,000 times		1,000,000 times	
				20% Deflection	Load N (kgf)	18% Deflection	Load N (kgf)	16% Deflection	Load N (kgf)
16	20	8	32.25	4.0	1275 (130)	3.6	1147 (117)	3.2	1020 (104)
	25		25.80	5.0		4.5		4.0	
	30		21.50	6.0		5.4		4.8	
	35		18.43	7.0		6.3		5.6	
	40		16.13	8.0		7.2		6.4	
	45		14.33	9.0		8.1		7.2	
	50		12.90	10.0		9.0		8.0	
	55		11.73	11.0		9.9		8.8	
	60		10.75	12.0		10.8		9.6	
	65		9.92	13.0		11.7		10.4	
	70		9.21	14.0		12.6		11.2	
	75		8.60	15.0		13.5		12.0	
	80		8.06	16.0		14.4		12.8	
	90		7.17	18.0		16.2		14.4	
	100		6.45	20.0		18.0		16.0	
18	20	9	40.25	4.0	1569 (160)	3.6	1412 (144)	3.2	1255 (128)
	25		32.20	5.0		4.5		4.0	
	30		26.83	6.0		5.4		4.8	
	35		23.00	7.0		6.3		5.6	
	40		20.13	8.0		7.2		6.4	
	45		17.89	9.0		8.1		7.2	
	50		16.10	10.0		9.0		8.0	
	55		14.64	11.0		9.9		8.8	
	60		13.42	12.0		10.8		9.6	
	65		12.38	13.0		11.7		10.4	
	70		11.50	14.0		12.6		11.2	
	75		10.73	15.0		13.5		12.0	
	80		10.06	16.0		14.4		12.8	
	90		8.94	18.0		16.2		14.4	
	100		8.05	20.0		18.0		16.0	
20	20	10	51.50	4.0	2059 (210)	3.6	1853 (189)	3.2	1648 (168)
	25		41.20	5.0		4.5		4.0	
	30		34.33	6.0		5.4		4.8	
	35		29.43	7.0		6.3		5.6	
	40		25.75	8.0		7.2		6.4	
	45		22.89	9.0		8.1		7.2	
	50		20.60	10.0		9.0		8.0	
	55		18.73	11.0		9.9		8.8	
	60		17.17	12.0		10.8		9.6	
	65		15.85	13.0		11.7		10.4	
	70		14.71	14.0		12.6		11.2	
	75		13.73	15.0		13.5		12.0	
	80		12.88	16.0		14.4		12.8	
	90		11.44	18.0		16.2		14.4	
	100		10.30	20.0		18.0		16.0	
	125		8.24	25.0		22.5		20.0	
22	25	11	50.20	5.0	2354 (240)	4.5	2118 (216)	4.0	1883 (192)
	30		41.83	6.0		5.4		4.8	
	35		35.86	7.0		6.3		5.6	
	40		31.38	8.0		7.2		6.4	
	45		27.89	9.0		8.1		7.2	
	50		25.10	10.0		9.0		8.0	
	55		22.82	11.0		9.9		8.8	
	60		20.92	12.0		10.8		9.6	
	65		19.31	13.0		11.7		10.4	
	70		17.93	14.0		12.6		11.2	
	75		16.73	15.0		13.5		12.0	
	80		15.69	16.0		14.4		12.8	
	90		13.94	18.0		16.2		14.4	
	100		12.55	20.0		18.0		16.0	
	125		10.04	25.0		22.5		20.0	

SUN RISE technologies
Tel: +662-324-3184-(89) Fax: +662-324-3190 / +662-324-3103
Website: www.sunrisegr.com Email: sale@sunrisegr.com

Super Heavy Load Spring - สปริงรับแรงกดที่มีค่าสูงมาก

ORDER EXAMPLE | Model | D - L | 19SG25-050

สปริงสีเทา
Grey Spring
Model: 19SG

Spring Load Chart
Light ← → Heavy

OIL FREE™ ACORE

D	L	d	Spring Constant (kgf/mm)	300,000 times		500,000 times		1,000,000 times	
				20% Deflection	Load N (kgf)	18% Deflection	Load N (kgf)	16% Deflection	Load N (kgf)
25	25	12.5	63.00	5.0	3040 (310)	4.5	2736 (279)	4.0	2432 (248)
	30		52.50	6.0		5.4		4.8	
	35		45.00	7.0		6.3		5.6	
	40		39.38	8.0		7.2		6.4	
	45		35.00	9.0		8.1		7.2	
	50		31.50	10.0		9.0		8.0	
	55		28.64	11.0		9.9		8.8	
	60		26.25	12.0		10.8		9.6	
	65		24.23	13.0		11.7		10.4	
	70		22.50	14.0		12.6		11.2	
	75		21.00	15.0		13.5		12.0	
	80		19.69	16.0		14.4		12.8	
	90		17.50	18.0		16.2		14.4	
	100		15.75	20.0		18.0		16.0	
	125		12.60	25.0		22.5		20.0	
	150		10.50	30.0		27.0		24.0	
27	25	13.5	74.60	5.0	3628 (370)	4.5	3265 (333)	4.0	2903 (296)
	30		62.17	6.0		5.4		4.8	
	35		53.29	7.0		6.3		5.6	
	40		46.63	8.0		7.2		6.4	
	45		41.44	9.0		8.1		7.2	
	50		37.30	10.0		9.0		8.0	
	55		33.91	11.0		9.9		8.8	
	60		31.08	12.0		10.8		9.6	
	65		28.69	13.0		11.7		10.4	
	70		26.64	14.0		12.6		11.2	
	75		24.87	15.0		13.5		12.0	
	80		23.31	16.0		14.4		12.8	
	90		20.72	18.0		16.2		14.4	
	100		18.65	20.0		18.0		16.0	
	125		14.92	25.0		22.5		20.0	
	150		12.43	30.0		27.0		24.0	
30	25	15	92.80	5.0	4707 (480)	4.5	4236 (432)	4.0	3765 (384)
	30		77.33	6.0		5.4		4.8	
	35		66.29	7.0		6.3		5.6	
	40		58.00	8.0		7.2		6.4	
	45		51.56	9.0		8.1		7.2	
	50		46.40	10.0		9.0		8.0	
	55		42.18	11.0		9.9		8.8	
	60		38.67	12.0		10.8		9.6	
	65		35.69	13.0		11.7		10.4	
	70		33.14	14.0		12.6		11.2	
	75		30.93	15.0		13.5		12.0	
	80		29.00	16.0		14.4		12.8	
	90		25.78	18.0		16.2		14.4	
	100		23.20	20.0		18.0		16.0	
	125		28.56	25.0		22.5		20.0	
	150		15.47	30.0		27.0		24.0	
	175		13.26	35.0		31.5		28.0	
	200		11.60	40.0		36.0		32.0	
35	35	17.5	90.14	7.0	6178 (630)	6.3	5560 (567)	5.6	4942 (504)
	40		78.88	8.0		7.2		6.4	
	45		70.11	9.0		8.1		7.2	
	50		63.10	10.0		9.0		8.0	
	55		57.36	11.0		9.9		8.8	
	60		52.58	12.0		10.8		9.6	
	65		48.54	13.0		11.7		10.4	
	70		45.07	14.0		12.6		11.2	
	75		42.07	15.0		13.5		12.0	
	80		39.44	16.0		14.4		12.8	
	90		35.06	18.0		16.2		14.4	
	100		31.55	20.0		18.0		16.0	
	125		25.24	25.0		22.5		20.0	
	150		21.03	30.0		27.0		24.0	
	175		18.03	35.0		31.5		28.0	
	200		15.78	40.0		36.0		32.0	

สปริงแม่พิมพ์

Super Heavy Load Spring - สปริงรับแรงกดที่มีค่าสูงมาก

ORDER EXAMPLE | Model D - L | 19SG25-050

สปริงสีเทา
Grey Spring
Model: 19SG

Spring Load Chart
Light ← → Heavy

OIL FREE™ CORE

D	L	d	Spring Constant (kgf/mm)	300,000 times		500,000 times		1,000,000 times	
				20% Deflection	Load N (kgf)	18% Deflection	Load N (kgf)	16% Deflection	Load N (kgf)
40	40	20	103.00	8.0	8041 (820)	7.2	7237 (738)	6.4	6433 (656)
	45		91.56	9.0		8.1		7.2	
	50		82.40	10.0		9.0		8.0	
	55		74.91	11.0		9.9		8.8	
	60		68.67	12.0		10.8		9.6	
	65		63.38	13.0		11.7		10.4	
	70		58.86	14.0		12.6		11.2	
	75		54.93	15.0		13.5		12.0	
	80		51.50	16.0		14.4		12.8	
	90		45.78	18.0		16.2		14.4	
	100		41.20	20.0		18.0		16.0	
	125		32.96	25.0		22.5		20.0	
	150		27.47	30.0		27.0		24.0	
	175		23.54	35.0		31.5		28.0	
	200		20.60	40.0		36.0		32.0	
50	50	25	128.80	10.0	12258 (1250)	9.0	11033 (1125)	8.0	9807 (1000)
	55		117.09	11.0		9.9		8.8	
	60		107.33	12.0		10.8		9.6	
	65		99.08	13.0		11.7		10.4	
	70		92.00	14.0		12.6		11.2	
	75		85.87	15.0		13.5		12.0	
	80		80.50	16.0		14.4		12.8	
	90		71.56	18.0		16.2		14.4	
	100		64.40	20.0		18.0		16.0	
	125		51.52	25.0		22.5		20.0	
	150		42.93	30.0		27.0		24.0	
	175		36.80	35.0		31.5		28.0	
	200			40.0		36.0		32.0	

SUN RISE technologies
Tel: +662-324-3184-(89) Fax: +662-324-3190 / +662-324-3103
Website: www.sunrisegr.com Email: sale@sunrisegr.com

Spring Guide Unit - สปริงไกด์ยูนิต

OIL FREE™

Model: 25SUK

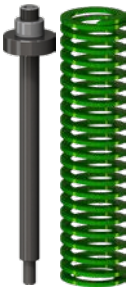

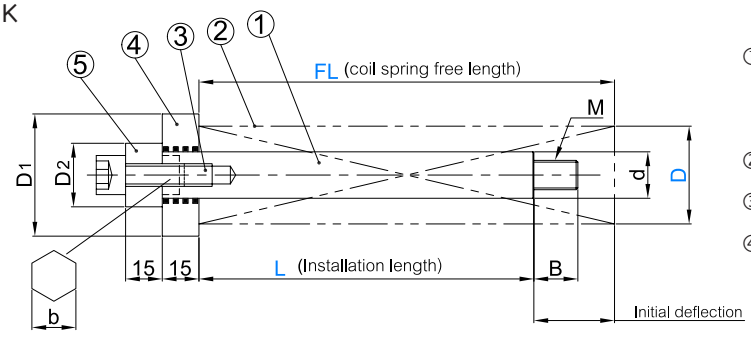

① Ⓜ Guide Pin S45C 50HRC~ (Induction Harden)
② Coil Spring
③ Hex Socket Head Bolt
④ Ⓜ Separate Disk FC250 Oil Free™ Solid Lubricant
⑤ Ⓜ Pressure Disk SS400

ORDER EXAMPLE Model: Spring Type - D - FL - L
25SUKF50-200-150

*ขนาด 400 หรือมากกว่า สำหรับรุ่นสปริงสีเหลือง (F) เท่านั้น
*Size 400 and over for yellow springs (F) only

Model	Spring Type	D	FL	L 1mm increments FL 90	100	125	150	175	200	250	300	350	*400	*450	*500	d	D1	D2	MxP	B	b
25SUK	F (Yellow) L (Blue) M (Red) H (Green)	40	90 100 125 150 175 200 250 300 350 400 450 500	68 - 90	80 - 100	90 - 125	105 - 150	130 - 175	145 - 200	195 - 250	240 - 300	-	-	-	-	19	50	28	12x1.75	24	12
		50				95 - 125	110 - 150	120 - 175	135 - 200	185 - 250	225 - 300	275 - 350	325 - 400	375 - 450	425 - 500	24	60	36	16x2.0	28	17
		60														29	70	43			
		70											-	-	-	35	80	48	20x2.5	33	22

ORDER EXAMPLE Model: Spring OD - FL - L
25SUKGP60-250-200

Coil Spring OD	ℓ Coil Spring Free Length (FL) 90	100	125	150	175	200	250	300	350	*400	*450	*500
40	55	65	75	85	85	95	95	110				
50	60	70	80	90	90	100	100	110	110	110	110	110
60	60	70	80	90	90	100	100	110	110	110	110	110
70	60	70	80	90	90	100	100	110	110			

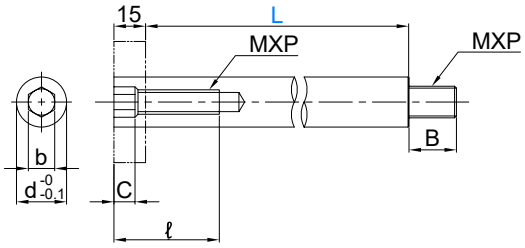

Model	Coil Spring OD	FL	L 1mm increments FL 90	100	125	150	175	200	250	300	350	*400	*450	*500	d	b	C	MxP	B
25SUKGP	40	90 100 125 150 175 200 250 300 350 400 450 500	68 - 90	80 - 100	90 - 125	105 - 150	130 - 175	145 - 200	195 - 250	240 - 300	-	-	-	-	19	12	7	12x1.75	24
	50				95 - 125	110 - 150	120 - 175	135 - 200	185 - 250	225 - 300	275 - 350	325 - 400	375 - 450	425 - 500	24	17	10	16x2.0	28
	60														29	17	10		
	70											-	-	-	35	22	10	20x2.5	33

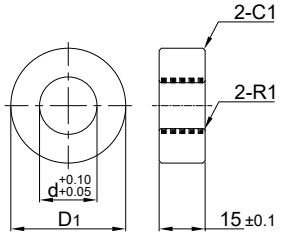

Model	Coil Spring OD	D1	d
25SUKSD	40	50	19
	50	60	24
	60	70	29
	70	80	35

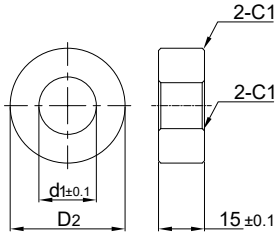

Model	Coil Spring OD	D2	d1
25SUKPD	40	28	13
	50	36	17
	60	43	
	70	48	21

Washers for Die Springs - วอชเชอร์สำหรับสปริง

OIL FREE™

Model: 25SSWA

ORDER EXAMPLE: Model D - t → 25SSWA13-2.0

M SS400

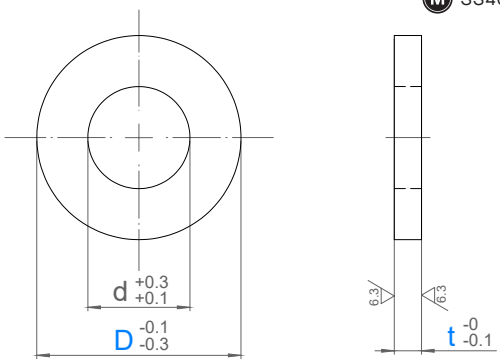

Model	D	t	d	Spring OD
25SSWA	5	1.0 2.0 3.0 4.0 5.0	3.0	6
	7		5.0	8
	9		6.0	10
	11.5		7.0	12
	13		8.0	14
	15		9.0	16
	17		10.0	18
	19		12.0	20
	21		12.0	22
	24		14.5	25
	26		15.0	27
	29		17.0	30
	34		20.0	35
	39		23.0	40

Model: 25SSWB

ORDER EXAMPLE: Model D → 25SSWB13

M SS400

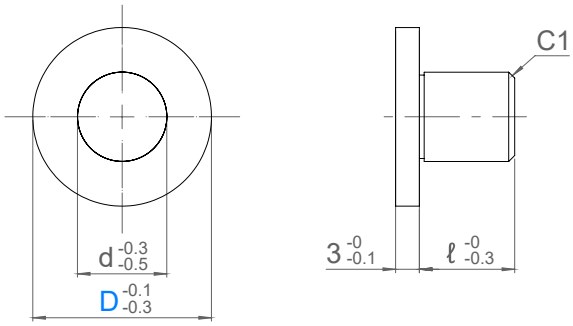

Model	D	d	ℓ	Spring OD
25SSWB	7	3.5	4.0	8
	9	4.5	5.0	10
	11	5.5	6.0	12
	13	6.5	7.0	14
	15	7.5	8.0	16
	17	8.5	9.0	18
	19	9.5	10.0	20
	21	10.5	11.0	22
	24	12.0	12.0	25
	26	13.0	13.0	27
	29	14.5	15.0	30
	34	17.0	17.0	35
	39	19.5	20.0	40

Model: 25SSWC

ORDER EXAMPLE: Model D → 25SSWC13

M SS400

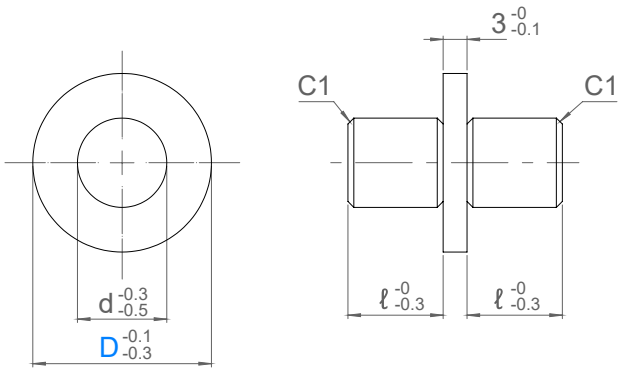

Model	D	d	ℓ	Spring OD
25SSWC	7	3.5	4.0	8
	9	4.5	5.0	10
	11	5.5	6.0	12
	13	6.5	7.0	14
	15	7.5	8.0	16
	17	8.5	9.0	18
	19	9.5	10.0	20
	21	10.5	11.0	22
	24	12.0	12.0	25
	26	13.0	13.0	27
	29	14.5	15.0	30
	34	17.0	17.0	35
	39	19.5	20.0	40

Tel: +662-324-3184-(89) Fax: +662-324-3190 / +662-324-3103
Website: www.sunrisegr.com Email: sale@sunrisegr.com

Spring Unit Flanges - แฟลงจ์สำหรับชุดประคองสปริง

OIL FREE™



Model: 25WUNT



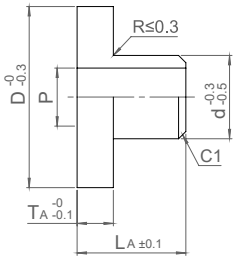

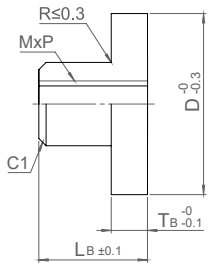

ORDER EXAMPLE | Model: Spring OD - L1 | 25WUNT30-13

Ⓜ S45C
Fe304 (Blackening)

Model	Spring OD	LA	LB	P	MxP	TA	TB	D	d
25WUNT	25	10	10	8	6x1.0	5	5	26	12
	27	11	11					28	13
	30	11	11	10	8x1.25			31	14
		13	13						
	35	13	13					36	17
	40	13	13	12				41	19

Spring Guide Pins - สปริงไกด์พิน

OIL FREE™



Model: 25SGA

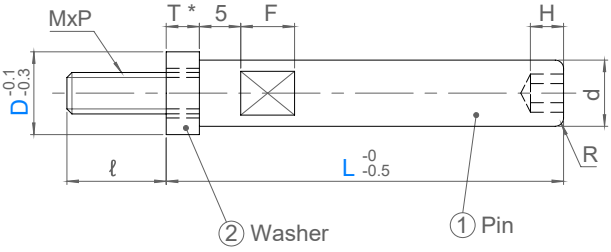

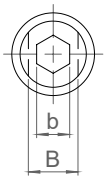

ORDER EXAMPLE | Model: D - L | 25SGA15-100

① Ⓜ S45C
② 20-25HRC
Fe304 (Blackening)

*ขนาด T เปลี่ยนตามขนาด L
T change with L

Model	D	L 5mm increments	MxP	ℓ	b	H	B	F	R	T	d	Spring OD Yellow	Spring OD Load > Yellow
25SGA	7	20 - 50	4x0.7	7	3	3	4	8	1	3	6	14	14
	8											16	16
	9	20 - 75	5x0.8	8	4	3	6	8	2	4	8	18	18
	10											-	20
	11	20 - 85	6x1.0	10	5	4	8	8	2	5	10	20 22	22
	12.5											-	25
	13.5	20 - 125	8x1.25	17 (12)	6	4	11	10	3	5 (10)	13	25 - 27	27
	15											-	30
	16											30	-
	17.5	30 - 185	10x1.5	20 (15)	8	5	14	12	3	5 (10)	16	-	35
	19											35	-
	20											-	40
	22	30 - 215	12x1.75	23 (18)	10	6	17	14	3	5 (10)	20	40	-
	25											-	50
	27.5											50	-
	30	50 -215	16x2.0	27 (22)	14	8	22	16	3	5 (10)	25	-	60
	33											60	-

สปริงแม่พิมพ์

Spring Guide Retainers - สปริงไกด์รีเทนเนอร์

Model: 25SGR

OIL FREE™



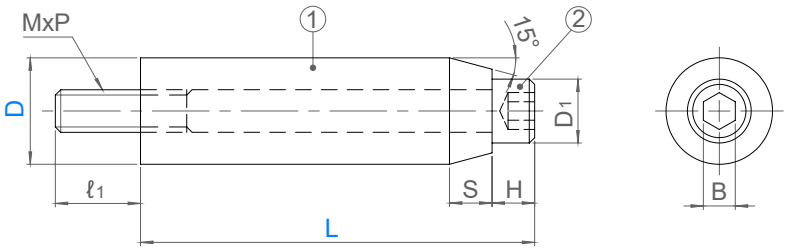



รุ่นที่มีค่า d ในตาราง
Model with d dimension in the table

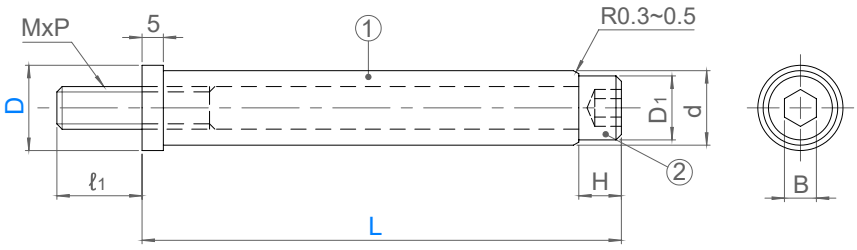

ORDER EXAMPLE: Model D - L (25SGR8-30)
① ② Ⓜ SS400 SCM435

D	L	d	D1	B	MxP	H	S	ℓ1	Spring OD	
									Yellow	Load > Yellow
6	18	-	4.5	2	2.5x0.45	2.5	2	9.5	14 16	14 16
	23									
	28									
8	20	-	5.5	2.5	3x0.5	3	3	8	18	18 20
	30									
	40									
	50									
10	20	-	7	3	4x0.7	4	4	9	20 22	22 25
	30									
	40									
	50									
	60									
12	20	-	8.5	4	5x0.8	5	4	10	25 27	27
	30									
	40									
	50									
	60									
14	12	-	10	4	6x1.0	4	4	12	30	30
	20			5		5		11		
	30									
	40									
	50									
	60									

SUN RISE technologies
Tel: +662-324-3184-(89) Fax: +662-324-3190 / +662-324-3103
Website: www.sunrisegr.com Email: sale@sunrisegr.com

Spring Guide Retainers - สปริงไกด์รีเทนเนอร์

OIL FREE™

ORDER EXAMPLE | Model | D - L | 25SGR20-40 | ① Ⓜ SS400 ② SCM435

D	L	d	D1	B	MxP	H	S	ℓ1	Spring OD	
									Yellow	Load > Yellow
16	18	-	13	6	8x1.25	8	5	15	35	35
	30							13		
	60									
	80									
19	28	-	16	8	10x1.5	10	5	17	-	40
	40							20		
	60									
	80									
	100	17					-			
20	23	-					5	17	40	-
	40							20		
	60									
	80									
	100	17					-			
23	30	-	18	10	12x1.75	12	8	22	-	50
	40									
	60									
	80									
	100									
	120	20					-			
26	28	-					8	24	50	-
	60							22		
	80									
	100	21					-			
	120									
28	30	-					12	22	-	60
	40									
	60									
	80									
	100									
	120	23					-			
31	28	-					12	22	60	-
	40									
	60									
	80									
	100	25					-			
	120									
36	40	-					15	22	70	70
	60									
	80									
	100	30					-			
	120									

ยูรีเทนสปริง
URETHANE SPRINGS

			
Name	Economy Urethane	Heavy Load Urethane	Heavy Duty Urethane
Model	23UA-E / 23UC-E	23UA-H / 23UC-H	23UA-ES / 23UC-ES
Page	317	318	318

				
Name	Heavy Load Urethane	Urethane for Stock Block	Economy Urethane Sheet	Heavy Load Urethane Sheet
Model	23UAX	23UA-H-S(B) / 23UA-H-U(B)	23US-E	23US-H
Page	319	319	320	320

Economy Urethane - ยูรีเทนรุ่นประหยัด

OIL FREE™



Model 23UA-E
มีรูใน / Internal Diameter

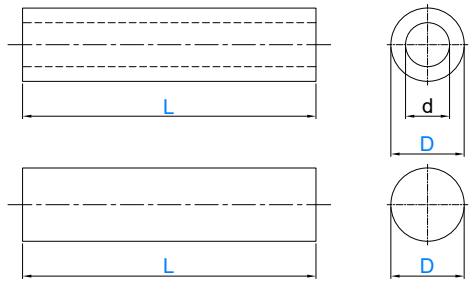

Model 23UC-E
ตัน / No Internal Diameter

ORDER EXAMPLE | Model | D - d - L - Color

23UA-E20-8.5-100-N

23UC-E20-100-R

Ⓜ Shore A90

รุ่นตันไม่ต้องระบุค่า d เวลาสั่ง
No Internal Diameter model skip d value when order

หากไม่ระบุสี จะผลิตเป็นสีเหลืองธรรมชาติ
If color is not specify. The default color is natural yellow.

Model	D	d	L (1mm increment)	Color
23UA-E 23UC-E	8	-	10 - 200	R (red) G (green) L (dark blue) B (black) W (white) **N (natural)**
	10	-		
	15	7		
	20	8.5		
	25	11		
	30	14		
	40			
	50			
	60			

SUN RISE technologies
Tel: +662-324-3184-(89) Fax: +662-324-3190 / +662-324-3103
Website: www.sunrisegr.com Email: sale@sunrisegr.com

Urethane for Heavy Load - ยูรีเทนสำหรับงานหนัก

OIL FREE™



Model 23UA-H
มีรูใน / Internal Diameter

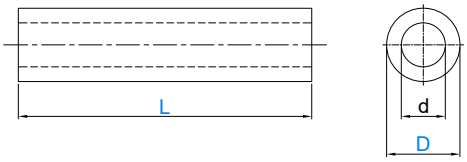

Model 23UC-H
ตัน / No Internal Diameter

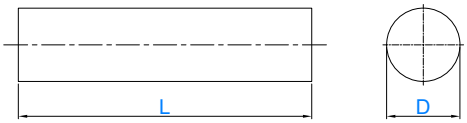

ORDER EXAMPLE | Model | D - d - L - Color
- 23UA-H20-8.5-100-B
- 23UC-H20-100-R

Ⓜ Shore A90

⚠ รุ่นตันไม่ต้องระบุค่า d เวลาสั่ง
No Internal Diameter model skip d value when order

⚠ หากไม่ระบุสี จะผลิตเป็นสีดำ
If color is not specify. The default color is black.

Model	D	d	L (1mm increment)	Color
23UA-H 23UC-H	8	-	10 - 200	R (red) G (green) L (dark blue) **B (black)** W (white) N (natural)
	10	-		
	15	7		
	20	8.5		
	25	11		
	30	14	10 - 500	
	40			
	50			
	60			
	70			
	70	22		
	80			
	90			
	100			
	110			

Heavy Duty Urethane for Heavy Load - ยูรีเทนใช้งานหนัก สำหรับงานหนัก

OIL FREE™

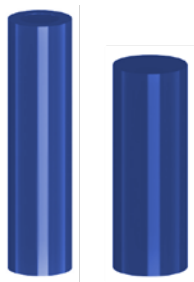

Model 23UA-ES
มีรูใน / Internal Diameter

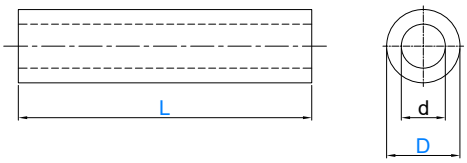

Model 23UC-ES
ตัน / No Internal Diameter

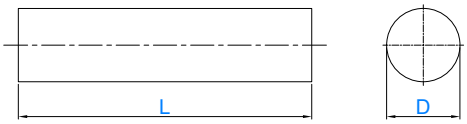

ORDER EXAMPLE | Model | D - d - L - Color
- 23UA-ES20-8.5-100-L
- 23UC-ES20-100-R

Ⓜ Shore A90

⚠ รุ่นตันไม่ต้องระบุค่า d เวลาสั่ง
No Internal Diameter model skip d value when order

⚠ หากไม่ระบุสี จะผลิตเป็นสีน้ำเงิน
If color is not specify. The default color is dark blue.

Model	D	d	L (1mm increment)	Color
23UA-ES 23UC-ES	15	7	10 - 200	R (red) G (green) **L (dark blue)** B (black) W (white) N (natural)
	20	8.5		
	25	11		
	30	14	10 - 500	
	40			
	50			
	60			
	70			
	70	22		
	80			
	90			
	100			
	110			

ยูรีเทนสปริง

Urethane for Heavy Load - ยูรีเทนสำหรับงานหนัก

OIL FREE™



Model : 23UAX

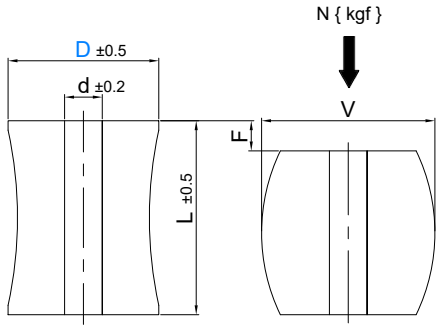

ORDER EXAMPLE: Model - D - d - L - Color
23UAX50-14-62-B

Ⓜ Shore A90

หากไม่ระบุสี จะผลิตเป็นสีดำ
If color is not specify. The default color is black.

Model	D	d	L	Color
23UAX	50	14	62	R (red)
			82	G (green)
	60	20	62	L (dark blue)
			82	**B (black)**
	80	20	82	W (white)
			103	N (natural)
	100	20	82	
			103	
			123	

Urethane for Stock Block - ยูรีเทนชุดสต็อคบล็อค

OIL FREE™



Model 23UA-H-S
Bush Only

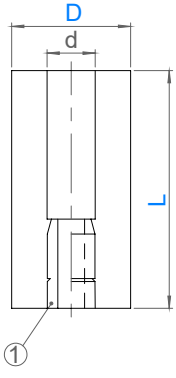

Model 23UA-H-SB
Bush + Bolt

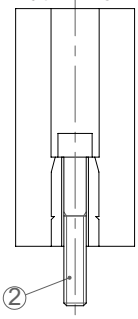

Model 23UA-H-U
Bush Only

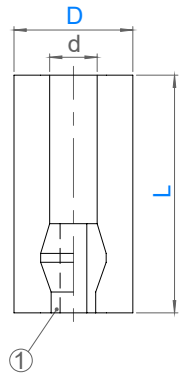

Model 23UA-H-UB
Bush + Bolt

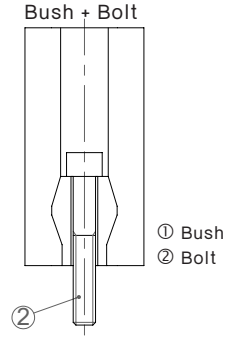

ORDER EXAMPLE: Model - D - d - L - Color
23UA-H-S50-14-110-B

Ⓜ Shore A90

หากไม่ระบุสี จะผลิตเป็นสีดำ
If color is not specify. The default color is black.

Model	D	d	L	Color	Bolt
23UA-H-S 23UA-H-SB	40	14	80	R (red) G (green) L (dark blue) **B (black)** W (white) N (natural)	8 x 45
	50	14	110		
	70	14	140		
		22	110		12 x 55
			140		
	90	22	120		
			140		
	100	22	140		
23UA-H-U 23UA-H-UB	40	14	80		8 x 45
	70	22	110		12 x 55
			140		
	90	22	140		

SUN RISE technologies
Tel: +662-324-3184-(89) Fax: +662-324-3190 / +662-324-3103
Website: www.sunrisegr.com Email: sale@sunrisegr.com

Economy Urethane Sheets - แผ่นยูรีเทนรุ่นประหยัด

OF OIL FREE™



Model : 23US-E

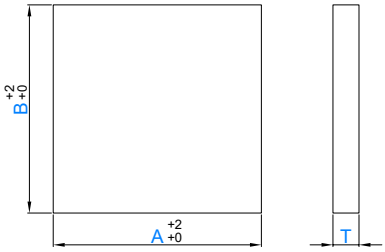

ORDER EXAMPLE | Model | T - A - B - Color | 23US-E10-100-100-N

Ⓜ Shore A90

หากไม่ระบุสี จะผลิตเป็นสีเหลืองธรรมชาติ
If color is not specify. The default color is natural yellow.

Model	T	A (1mm increment)	B (1mm increment)	Color
23US-E	5 6 8 10 15 20 25 30 40 50	20 - 500	20 - 500	R (red) G (green) L (dark blue) B (black) W (white) **N (natural)**

Urethane Sheets for Heavy Load - แผ่นยูรีเทนสำหรับงานหนัก

OF OIL FREE™



Model : 23US-H

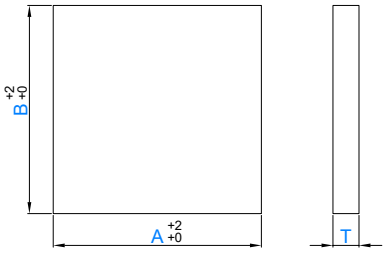

ORDER EXAMPLE | Model | T - A - B - Color | 23US-H10-100-100-B

Ⓜ Shore A90

หากไม่ระบุสี จะผลิตเป็นสีดำ
If color is not specify. The default color is black.

Model	T	A (1mm increment)	B (1mm increment)	Color
23US-H	5 6 8 10 15 20 25 30 40 50	20 - 500	20 - 500	R (red) G (green) L (dark blue) **B (black)** W (white) N (natural)

แก๊สสปริง
GAS SPRINGS






Name	TSX Gas Spring	TSX Gas Spring	TST Gas Spring	TSM Gas Spring	TSS Gas Spring	TSL Gas Spring
Model	18TSP	18TSX	18TST	18TSM	18TSS	18TSL
Page	323-333	334-341	342-346	347-356	357-360	361-367








Name	Control Panel		Multi Panel	Distribution Block & Fittings
Model	18PAN3	18PAN6	18PSS	18HB / 18CB / Fitting Types
Page	368	368	369	370-372



Name	Mountings
Model	S / X / T / M types
Page	373-376

แก๊สสปริง | TOSS Gas Spring








TSP

18TSP0170
18TSP0320
18TSP0350
18TSP0500
18TSP0750
18TSP1000
18TSP1500
18TSP2400
18TSP4200
18TSP6600
18TSP9500

TSX

18TSX0350
18TSX0500
18TSX0750
18TSX1000
18TSX1500
18TSX2400
18TSX4200
18TSX6600

TST

18TST1000
18TST2400
18TST4200
18TST6600
18TST9500

TSM

18TSM50
18TSM70
18TSM90
18TSM0150
18TSM0300
18TSM0500
18TSM0750
18TSM1500
18TSM3000
18TSM5000

TSS

18TSS0750
18TSS1500
18TSS3000
18TSS5000

TSL

ISO

18TSL0500
18TSL0750
18TSL1500
18TSL3000
18TSL5000
18TSL7500
18TSL10000

SUN RISE technologies
Tel: +662-324-3184-(89) Fax: +662-324-3190 / +662-324-3103
Website: www.sunrisegr.com Email: sale@sunrisegr.com

ตารางการเลือกแก๊สสปริง | Gas Spring selecting chart

Type		Model	Stroke	Body Dia	Rod Dia	Force (N)		Page
						Initial	End	
XTRA HIGH POWER		18TSP0170	7 - 125	19	11	1,700	2,800	323
		18TSP0320	7 - 125	25	15	3,200	5,500	324
		18TSP0350	10 - 125	32	16	3,600	5,400	325
		18TSP0500	10 - 125	38	20	4,700	7,200	326
		18TSP0750	10 - 125	45	25	7,400	11,700	327
		18TSP1000	13 - 125	50	28	9,200	14,900	328
		18TSP1500	13 - 125	63	36	15,200	24,100	329
		18TSP2400	16 - 125	75	45	23,500	38,400	330
		18TSP4200	16 - 125	95	60	42,200	70,900	331
		18TSP6600	16 - 125	120	75	66,000	108,700	332
		18TSP9500	20 - 125	150	90	95,000	149,100	333
STABLE XTRA HIGH POWER		18TSX0350	10 - 125	32	16	3,600	5,400	334
		18TSX0500	10 - 125	38	20	4,700	7,200	335
		18TSX0750	10 - 125	45	25	7,400	11,700	336
		18TSX1000	13 - 125	50	28	9,200	14,600	337
		18TSX1500	13 - 125	63	36	15,200	23,900	338
		18TSX2400	16 - 125	75	45	23,800	38,100	339
		18TSX4200	16 - 125	95	60	42,200	69,200	340
		18TSX6600	16 - 125	120	75	66,000	105,600	341
STABLE XTRA HIGH POWER		18TST1000	13 - 125	50	28	9,200	14,600	342
		18TST2400	16 - 125	75	45	23,800	38,100	343
		18TST4200	16 - 125	95	60	42,200	69,200	344
		18TST6600	16 - 125	120	75	66,000	105,600	345
		18TST9500	20 - 125	150	90	95,000	149,100	346
COMPACT		18TSM50	7 - 125	12	6	130 - 500	200 - 800	347
		18TSM70	7 - 125	15	7	180 - 700	200 - 1100	348
		18TSM90	7 - 125	19	8	300 - 900	400 - 1200	349
		18TSM0150	10 - 125	25	12	500 - 2000	700 - 2900	350
		18TSM0300	10 - 125	38	16	3,000	4,200	351
		18TSM0500	10 - 125	45	20	4,650	6,500	352
		18TSM0750	10 - 125	50	25	7,350	12,000	353
		18TSM1500	10 - 200	75	36	15,150	22,100	354
		18TSM3000	10 - 200	95	50	29,400	47,600	355
		18TSM5000	10 - 200	120	65	49,650	84,100	356
TOSS STANDARD		18TSS0750	10 - 200	50	25	7,350	11,800	357
		18TSS1500	10 - 300	75	36	15,150	22,000	358
		18TSS3000	10 - 300	95	50	29,400	47,000	359
		18TSS5000	10 - 300	120	65	49,650	84,300	360
ISO STANDARD		18TSL0500	10 - 160	45	20	4,650	6,200	361
		18TSL0750	10 - 300	50	25	7,350	11,500	362
		18TSL1500	10 - 300	75	36	15,150	22,100	363
		18TSL3000	10 - 300	95	50	29,400	47,300	364
		18TSL5000	10 - 300	120	65	49,650	83,900	365
		18TSL7500	15 - 300	150	80	75,300	123,900	366
		18TSL10000	20 - 300	195	95	106,200	156,600	367

แก๊สสปริง

TSP Gas Spring

Model: 18TSP0170

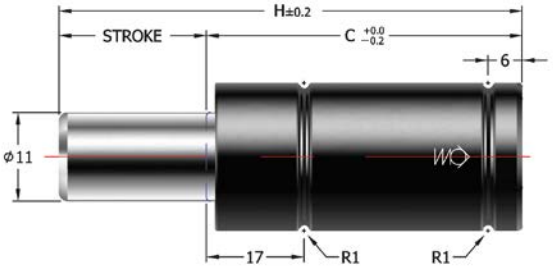

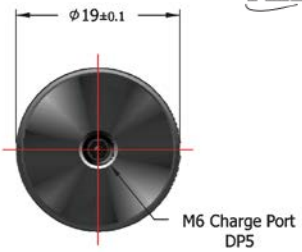

ORDER EXAMPLE | Model: S - Charging Pressure | 18TSP0170-050-180

ความดันเริ่มต้นหากไม่ระบุ จะเท่ากับ Charging Pressure if not mention is 180Bar

S	H	C	Force (180Bar)		Gas Volumn (cm^3)	Weight (kg)
			Initial (N)	End (N)		
007	44	37	1,700	2,500	2.2	0.06
010	50	40		2,500	2.9	0.06
013	56	43		2,600	3.6	0.07
016	62	46		2,600	4.4	0.07
020	70	50		2,700	5.3	0.08
025	80	55		2,700	6.5	0.08
030	90	60		2,700	7.7	0.09
035	100	65		2,700	8.9	0.10
038	106	68		2,700	9.6	0.11
040	110	70		2,700	10.1	0.11
045	120	75		2,800	11.3	0.12
050	130	80		2,800	12.5	0.12
060	150	90		2,800	14.9	0.14
063	156	93		2,800	15.6	0.14
070	175	105		2,800	17.3	0.15
075	185	110		2,800	18.5	0.15
080	195	115		2,800	19.7	0.16
090	215	125		2,800	22.1	0.18
100	235	135		2,800	24.5	0.20
125	285	160		2,800	30.4	0.22

Charging Pressure

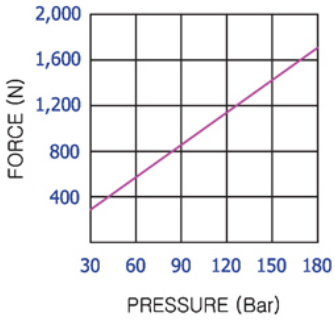

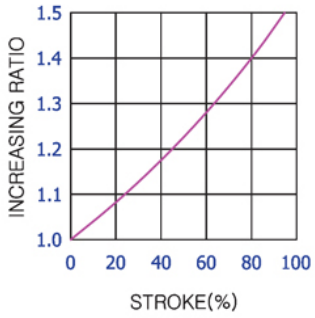

ORDER EXAMPLE | Model: 18XG0170

รายละเอียดโปรดดูหน้า Mounting ด้านหลังหมวดหมู่นี้
Mounting specification please see at the back of this category

Mounting Model:
18SG0170

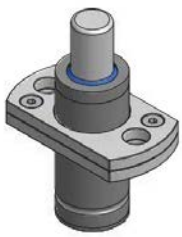

Mounting Model:
18SC0170



Mounting Model:
18SP0170

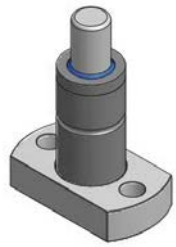

Gas Springs

SUN RISE technologies
Tel: +662-324-3184-(89) Fax: +662-324-3190 / +662-324-3103
Website: www.sunrisegr.com Email: sale@sunrisegr.com

TSP Gas Spring

Model: 18TSP0320

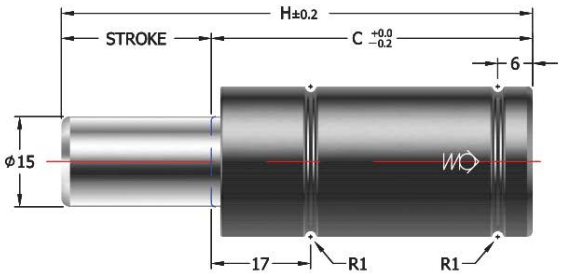

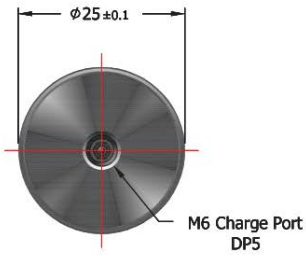

ORDER EXAMPLE: Model S - Charging Pressure
18TSP0320-050-180

ความดันเริ่มต้นหากไม่ระบุ จะเท่ากับ 180Bar
Charging Pressure if not mention is

S	H	C	Force		Gas Vol. (cm3)	Weight (kg)
			Initial (N)	End (N)		
007	44	37	3,200	5,000	3.7	0.09
010	50	40		5,000	4.9	0.11
013	56	43		5,100	6.2	0.11
016	62	46		5,200	7.4	0.12
020	70	50		5,200	9	0.14
025	80	55		5,300	11.1	0.15
030	90	60		5,300	13.1	0.16
035	100	65		5,400	15.2	0.18
038	106	68		5,400	16.4	0.18
040	110	70		5,400	17.2	0.19
045	120	75		5,400	19.3	0.21
050	130	80		5,400	21.3	0.22
060	150	90		5,500	25.4	0.25
063	156	93		5,500	26.6	0.26
070	175	105		5,500	29.5	0.28
075	185	110		5,500	31.6	0.28
080	195	115		5,500	33.6	0.32
090	215	125		5,500	37.7	0.33
100	235	135		5,500	41.8	0.36
125	285	160		5,500	52	0.43

Charging Pressure

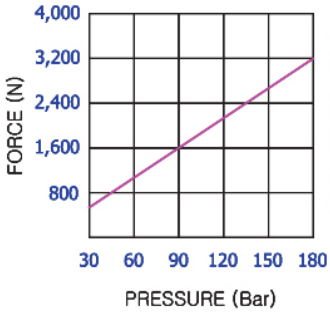

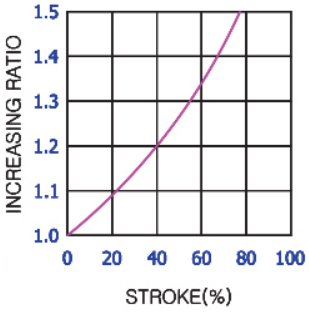

ORDER EXAMPLE: Model
18XR0320

รายละเอียดโปรดดูหน้า Mounting ด้านหลังหมวดหมู่นี้
Mounting specification please see at the back of this category

Mounting Model:
18XR0320(XR0150)

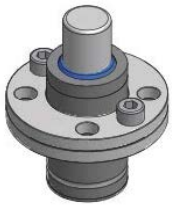

Mounting Model:
18XB0320(XB0150)

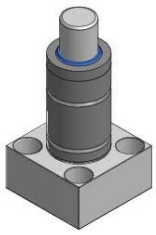

Mounting Model:
18XG0320(SG0150)



แก๊สสปริง

TSP Gas Spring

Model: 18TSP0350

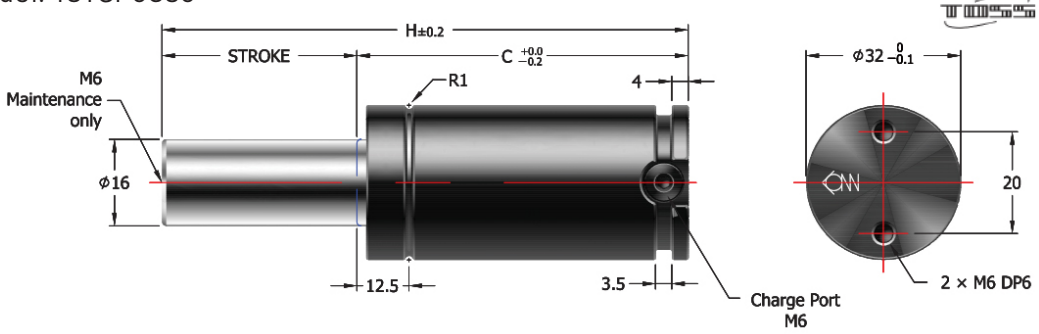

ORDER EXAMPLE | Model: S - Charging Pressure | 18TSP0350-050-180

ความดันเริ่มต้นหากไม่ระบุ จะเท่ากับ Charging Pressure if not mention is **180Bar**

S	H	C	Force		Gas Vol. (cm3)	Weight (kg)
			Initial (N)	End (N)		
010	50	40	3,600	5,000	7.2	0.20
013	56	43		5,100	9.0	0.21
016	62	46		5,200	10.8	0.21
020	70	50		5,200	13.3	0.23
025	80	55		5,200	16.3	0.25
030	90	60		5,300	19.4	0.26
035	100	65		5,300	22.4	0.28
038	106	68		5,300	24.2	0.29
040	110	70		5,300	25.4	0.29
045	120	75		5,300	28.5	0.32
050	130	80		5,300	31.5	0.33
060	150	90		5,300	37.6	0.37
063	156	93		5,300	39.5	0.37
070	170	100		5,300	43.7	0.40
075	180	105		5,300	46.8	0.41
080	190	110		5,300	49.8	0.43
090	210	120		5,300	55.9	0.46
100	230	130		5,400	62.5	0.49
125	280	155		5,400	77.2	0.58

Charging Pressure

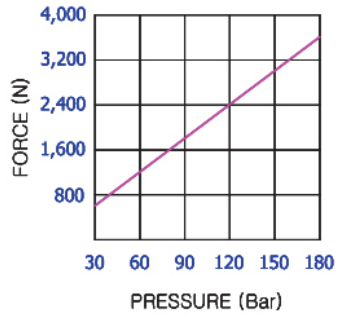

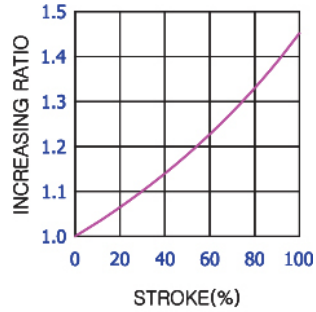

ORDER EXAMPLE | Model: 18XP0350

รายละเอียดโปรดดูหน้า Mounting ด้านหลังหมวดหมู่นี้
Mounting specification please see at the back of this category

Mounting Model:
18XP0350



Mounting Model:
18XR0350



SUN RISE technologies
Tel: +662-324-3184-(89) Fax: +662-324-3190 / +662-324-3103
Website: www.sunrisegr.com Email: sale@sunrisegr.com

TSP Gas Spring

Model: 18TSP0500

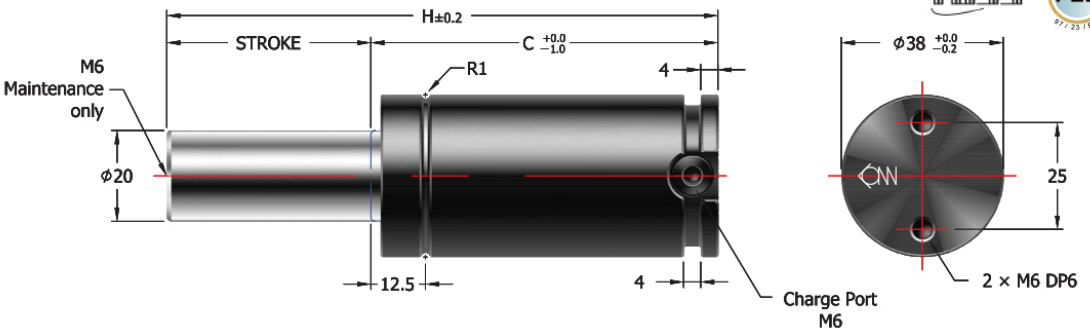

ORDER EXAMPLE | Model | S - Charging Pressure | 18TSP0500-050-150

ความดันเริ่มต้นหากไม่ระบุ จะเท่ากับ
Charging Pressure if not mention is **150Bar**

S	H	C	Force		Gas Vol. (cm3)	Weight (kg)
			Initial (N)	End (N)		
010	50	40	4,700	6,700	10.4	0.26
013	56	43		6,800	13.1	0.28
016	62	46		6,900	15.7	0.29
020	70	50		7,000	19.3	0.31
025	80	55		7,000	23.7	0.33
030	90	60		7,100	28.2	0.36
035	100	65		7,100	32.6	0.38
038	106	68		7,100	35.3	0.39
040	110	70		7,100	37.0	0.41
045	120	75		7,100	41.5	0.43
050	130	80		7,200	45.9	0.46
060	150	90		7,200	54.8	0.51
063	156	93		7,200	57.4	0.52
070	170	100		7,200	63.6	0.55
075	180	105		7,200	68.1	0.57
080	190	110		7,200	72.5	0.60
090	210	120		7,200	81.4	0.65
100	230	130		7,200	90.3	0.70
125	280	155		7,200	112.4	0.82

Charging Pressure

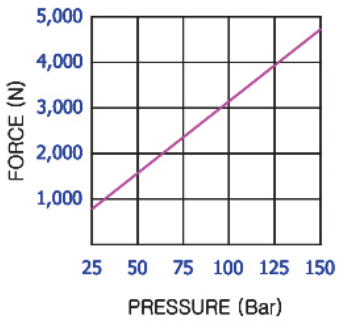

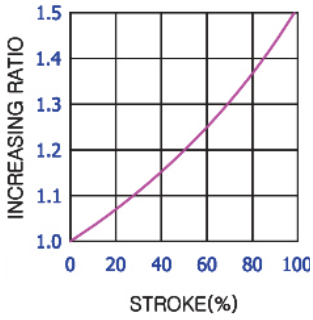

ORDER EXAMPLE | Model | 18XP0500

รายละเอียดโปรดดูหน้า Mounting ด้านหลังหมวดหมู่นี้
Mounting specification please see at the back of this category

Mounting Model:
18XP0500(XP0300)



Mounting Model:
18XR0500(XR0300)



Mounting Model:
18XT0500(XT0300)



Mounting Model:
18XC0500(XC0300)

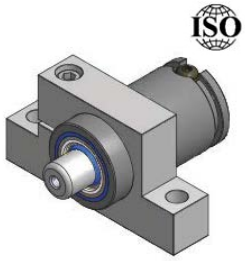

แก๊สสปริง

TSP Gas Spring

Model: 18TSP0750

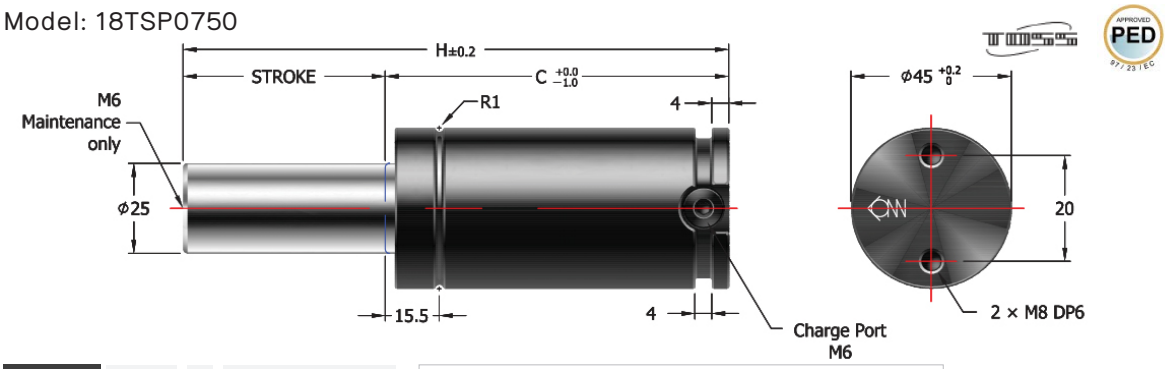

ORDER EXAMPLE | Model | S - Charging Pressure | 18TSP0750-050-150

ความดันเริ่มต้นหากไม่ระบุ จะเท่ากับ Charging Pressure if not mention is 150Bar

S	H	C	Force		Gas Vol. (cm3)	Weight (kg)
			Initial (N)	End (N)		
010	52	42	7,400	10,600	15.9	0.40
013	58	45		10,900	19.8	0.42
016	64	48		11,000	23.7	0.44
020	72	52		11,100	28.9	0.47
025	82	57		11,300	35.4	0.50
030	92	62		11,300	41.9	0.53
035	102	67		11,400	48.4	0.56
038	108	70		11,400	52.3	0.58
040	112	72		11,400	55.0	0.59
045	122	77		11,500	61.5	0.63
050	132	82		11,500	68.0	0.66
060	152	92		11,600	81.0	0.72
063	158	95		11,600	84.9	0.74
070	172	102		11,600	94.0	0.79
075	182	107		11,600	100.5	0.82
080	192	112		11,600	107.0	0.85
090	212	122		11,600	120.0	0.92
100	232	132		11,700	133.0	0.98
125	282	157		11,700	165.6	1.14

Charging Pressure

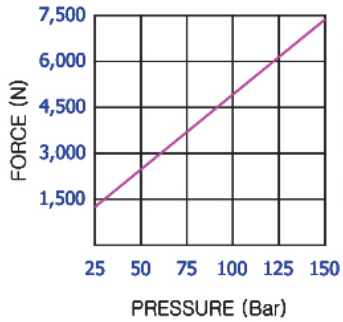

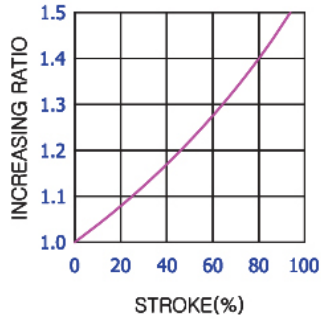

ORDER EXAMPLE | Model | 18XP0750

รายละเอียดโปรดดูหน้า Mounting ด้านหลังหมวดหมู่นี้
Mounting specification please see at the back of this category

Mounting Model: 18XP0750(SP0500)



Mounting Model: 18XR0750(SR0500)



Mounting Model: 18XT0750(ST0500)



Mounting Model: 18XB0750(SB0500)



Mounting Model: 18XP0500(XP0300)



SUN RISE technologies
Tel: +662-324-3184-(89) Fax: +662-324-3190 / +662-324-3103
Website: www.sunrisegr.com Email: sale@sunrisegr.com

TSP Gas Spring

Model: 18TSP1000

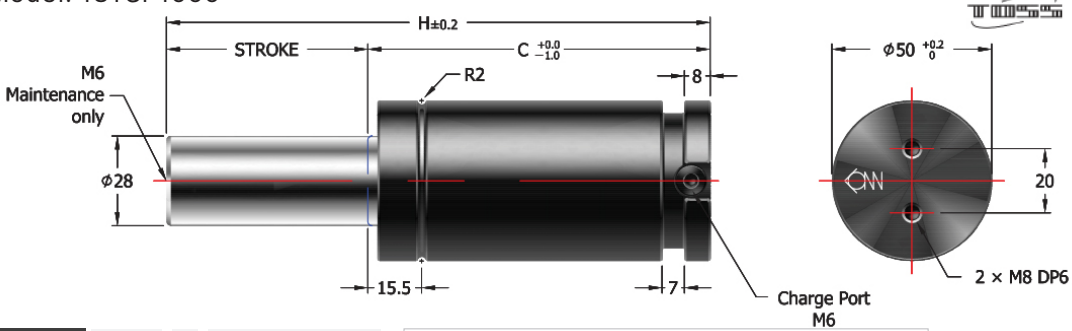

ORDER EXAMPLE	Model	S - Charging Pressure
	18TSP1000-050-150	

ความดันเริ่มต้นหากไม่ระบุ จะเท่ากับ
Charging Pressure if not mention is **150Bar**

S	H	C	Force		Gas Vol. (cm3)	Weight (kg)
			Initial (N)	End (N)		
013	64	51	9,200	13,300	27.3	0.58
016	70	54		13,600	32.0	0.61
020	78	58		13,800	38.3	0.64
025	88	63		14,000	46.2	0.68
030	98	68		14,200	54.0	0.72
035	108	73		14,300	61.9	0.76
038	114	76		14,400	66.6	0.78
040	118	78		14,400	69.7	0.80
045	128	83		14,500	77.6	0.80
050	138	88		14,600	85.4	0.89
060	158	98		14,600	101.1	0.96
063	164	101		14,700	105.8	0.98
070	178	108		14,700	116.8	1.04
075	188	113		14,700	124.7	1.09
080	198	118		14,800	132.5	1.12
090	218	128		14,800	148.2	1.21
100	238	138		14,900	163.8	1.29
125	288	163		14,900	203.2	1.49

Charging Pressure

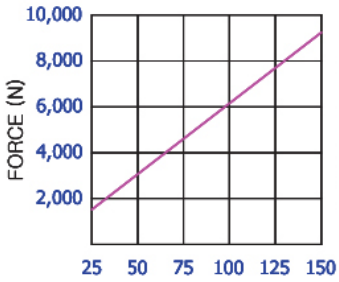

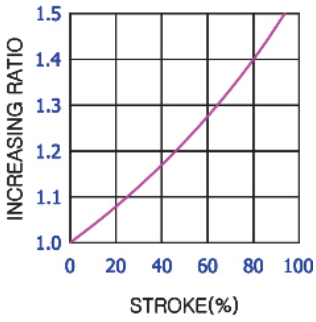

ORDER EXAMPLE	Model
	18XP1000

รายละเอียดโปรดดูหน้า Mounting ด้านหลังหมวดหมู่นี้
Mounting specification please see at the back of this category

Mounting Model:
18MD



Mounting Model:
18MS



Mounting Model:
18MK

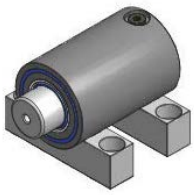

Mounting Model:
18XP1000(SP0750)



Mounting Model:
18XB1000(SB0750)



Mounting Model:
18XT1000(ST0750)



Mounting Model:
18XR1000(SR0750)



Mounting Model:
18XC1000(SC0750)



แก๊สสปริง

TSP Gas Spring

Model: 18TSP1500

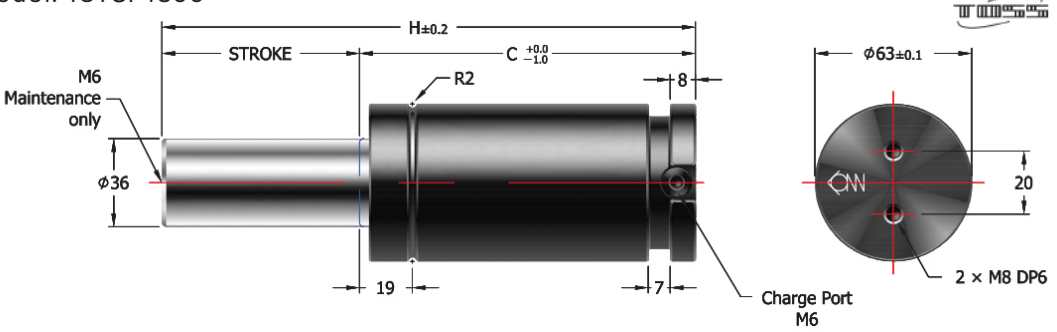

ORDER EXAMPLE	Model	S - Charging Pressure
	18TSP1500-050-150	

ความดันเริ่มต้นหากไม่ระบุ จะเท่ากับ 150Bar
Charging Pressure if not mention is

S	H	C	Force		Gas Vol. (cm3)	Weight (kg)
			Initial (N)	End (N)		
013	70	57	15,200	20,900	48.8	1.04
016	76	60		21,400	56.8	1.08
020	84	64		21,900	67.4	1.13
025	94	69		22,300	80.7	1.20
030	104	74		22,600	93.9	1.27
035	114	79		22,900	107.2	1.34
038	120	82		23,000	115.2	1.37
040	124	84		23,000	120.5	1.40
045	134	89		23,200	133.7	1.47
050	144	94		23,300	147.0	1.58
060	164	104		23,500	173.5	1.66
063	170	107		23,600	181.5	1.71
070	184	114		23,700	200.1	1.80
075	194	119		23,800	213.3	1.87
080	204	124		23,800	226.3	1.93
090	224	134		23,900	252.9	2.07
100	244	144		24,000	279.5	2.19
125	294	169		24,100	346.0	2.53

Charging Pressure

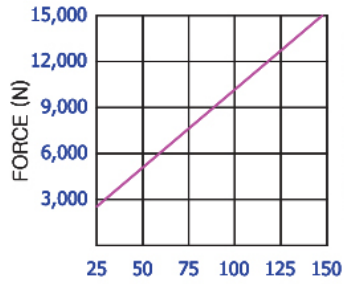

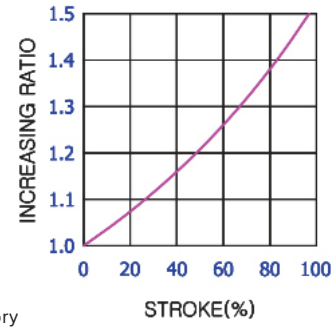

ORDER EXAMPLE	Model
	18XP1500

รายละเอียดโปรดดูหน้า Mounting ด้านหลังหมวดหมู่นี้
Mounting specification please see at the back of this category

Mounting Model:
18MD



Mounting Model:
18MS



Mounting Model:
18MK

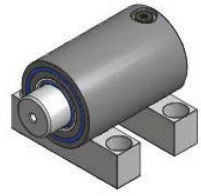

Mounting Model:
18XP1500



Mounting Model:
18XB1500



Mounting Model:
18XT1500



Mounting Model:
18XR1500



Mounting Model:
18XC1500

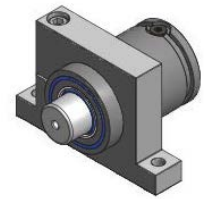

Gas Springs

SUN RISE technologies
Tel: +662-324-3184-(89) Fax: +662-324-3190 / +662-324-3103
Website: www.sunrisegr.com Email: sale@sunrisegr.com

TSP Gas Spring

Model: 18TSP2400

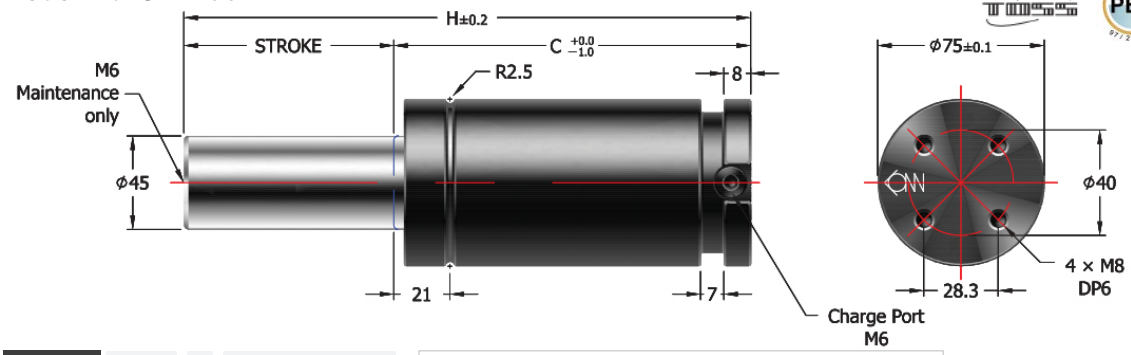

ORDER EXAMPLE	Model	S - Charging Pressure
	18TSP2400-050-150	

ความดันเริ่มต้นหากไม่ระบุ จะเท่ากับ
Charging Pressure if not mention is **150Bar**

S	H	C	Force		Gas Vol. (cm3)	Weight (kg)
			Initial (N)	End (N)		
016	77	61	23,800	33,800	86.3	1.58
020	85	65		34,600	102.4	1.65
025	95	70		35,300	122.5	1.73
030	105	75		35,800	142.6	1.81
035	115	80		36,200	162.7	1.89
038	121	83		36,400	174.8	1.94
040	125	85		36,600	182.8	1.97
045	135	90		36,800	203.0	2.05
050	145	95		37,000	223.1	2.13
060	165	105		37,400	263.3	2.30
063	171	108		37,500	275.4	2.34
070	185	115		37,600	303.5	2.47
075	195	120		37,700	323.6	2.55
080	205	125		37,800	343.8	2.63
090	225	135		38,000	384.0	2.79
100	245	145		38,100	424.2	2.95
125	295	170		38,400	524.8	3.37

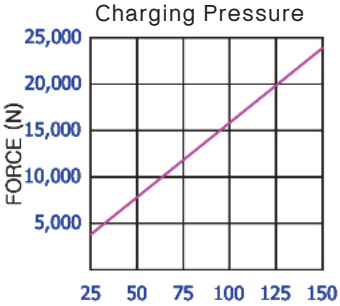

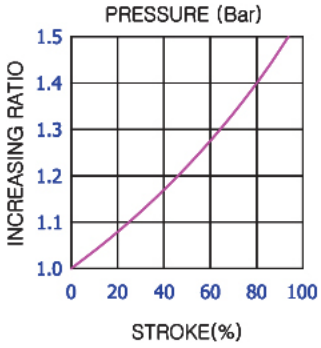

ORDER EXAMPLE	Model
	18XP2400

รายละเอียดโปรดดูหน้า Mounting ด้านหลังหมวดหมู่นี้
Mounting specification please see at the back of this category

Mounting Model:
18MD



Mounting Model:
18MS



Mounting Model:
18MK

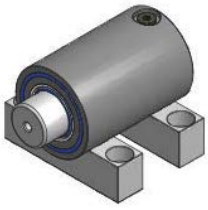

Mounting Model:
18XP2400(SP1500)



Mounting Model:
18XB2400(SB1500)



Mounting Model:
18XT2400(ST1500)



Mounting Model:
18XR2400(SR1500)



Mounting Model:
18XC2400(SC1500)



แก๊สสปริง

TSP Gas Spring

Model: 18TSP4200

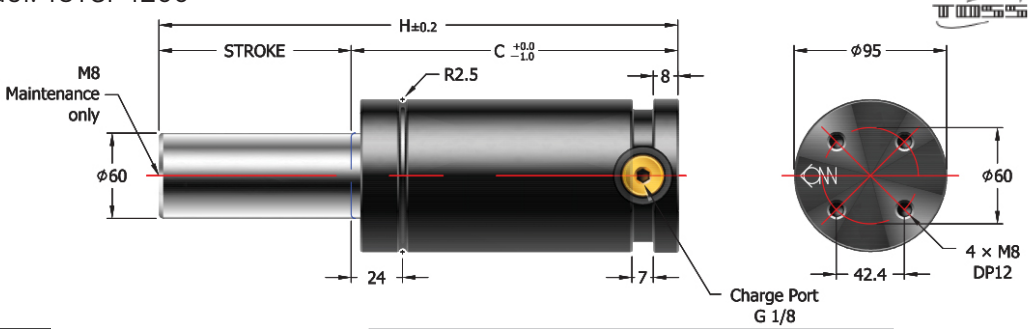

ORDER EXAMPLE Model: S - Charging Pressure — 18TSP4200-050-150

ความดันเริ่มต้นหากไม่ระบุ จะเท่ากับ 150Bar
Charging Pressure if not mention is

S	H	C	Force		Gas Vol. (cm3)	Weight (kg)
			Initial (N)	End (N)		
016	90	74	42,200	60,600	150.5	3.21
020	98	78		62,300	177.8	3.32
025	108	83		63,800	212.0	3.46
030	118	88		65,000	246.2	3.60
035	128	93		65,900	280.3	3.75
038	134	96		66,400	300.8	3.82
040	138	98		66,600	314.5	3.88
045	148	103		67,200	348.7	4.02
050	158	108		67,700	382.8	4.16
060	178	118		68,500	451.2	4.44
063	184	121		68,700	471.7	4.52
070	198	128		69,100	519.5	4.72
075	208	133		69,400	553.6	4.86
080	218	138		69,600	587.8	5.00
090	238	148		70,000	656.1	5.27
100	258	158		70,300	724.5	5.56
125	308	183		70,900	895.3	6.25

Charging Pressure

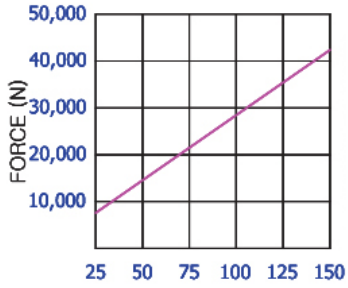

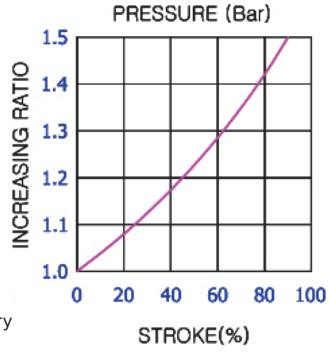

ORDER EXAMPLE Model: 18XP4200

รายละเอียดโปรดดูหน้า Mounting ด้านหลังหมวดหมู่นี้
Mounting specification please see at the back of this category

Mounting Model: 18MD



Mounting Model: 18MS

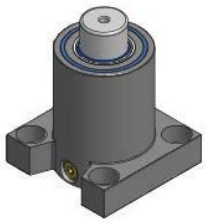

Mounting Model: 18MK

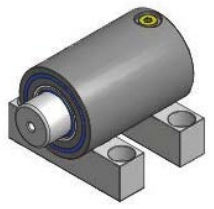

Mounting Model: 18XP4200(SP3000)



Mounting Model: 18XB4200(SB3000)



Mounting Model: 18XT4200(ST3000)



Mounting Model: 18XR4200(SR3000)



Mounting Model: 18XC4200(SC3000)

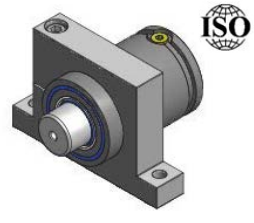

SUN RISE technologies
Tel: +662-324-3184-(89) Fax: +662-324-3190 / +662-324-3103
Website: www.sunrisegr.com Email: sale@sunrisegr.com

TSP Gas Spring

Model: 18TSP6600

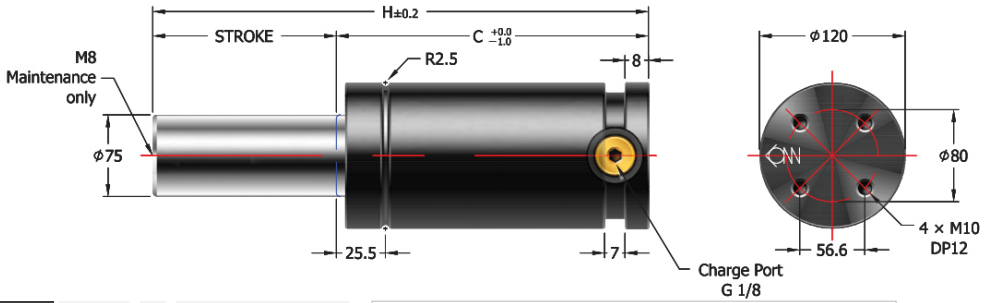

ORDER EXAMPLE | Model: S - Charging Pressure | 18TSP6600-050-150

ความดันเริ่มต้นหากไม่ระบุ จะเท่ากับ Charging Pressure if not mention is **150Bar**

S	H	C	Force		Gas Vol. (cm3)	Weight (kg)
			Initial (N)	End (N)		
016	100	84	66,000	91,900	272.3	6.01
020	108	88		93,700	315.7	6.19
025	118	93		96,200	370.1	6.42
030	128	98		98,200	424.4	6.65
035	138	103		99,700	478.7	6.87
038	144	106		100,500	511.3	7.01
040	148	108		101,000	533.1	7.11
045	158	113		102,100	587.4	7.33
050	168	118		103,000	641.8	7.56
060	188	128		104,400	750.4	8.01
063	194	131		104,800	783.0	8.15
070	208	138		105,500	859.1	8.47
075	218	143		105,900	913.4	8.70
080	228	148		106,400	967.8	8.93
090	248	158		107,100	1076.5	9.38
100	268	168		107,600	1185.1	9.84
125	318	193		108,700	1456.8	10.98

Charging Pressure

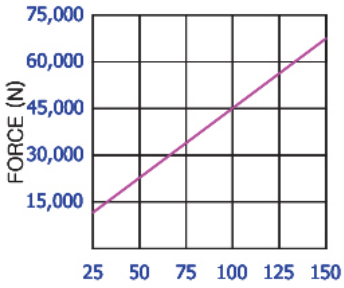

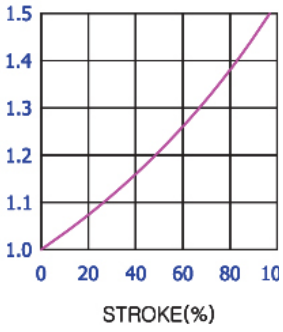

ORDER EXAMPLE | Model: 18XP6600

รายละเอียดโปรดดูหน้า Mounting ด้านหลังหมวดหมู่นี้
Mounting specification please see at the back of this category

Mounting Model:
18MD



Mounting Model:
18MS



Mounting Model:
18MK

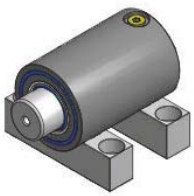

Mounting Model:
18XP6600(SP5000)



Mounting Model:
18XB6600(SB5000)



Mounting Model:
18XT6600(ST5000)



Mounting Model:
18XR6600(SR5000)



Mounting Model:
18XC6600(SC5000)

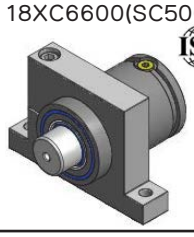

แก๊สสปริง

TSP Gas Spring

Model: 18TSP9500

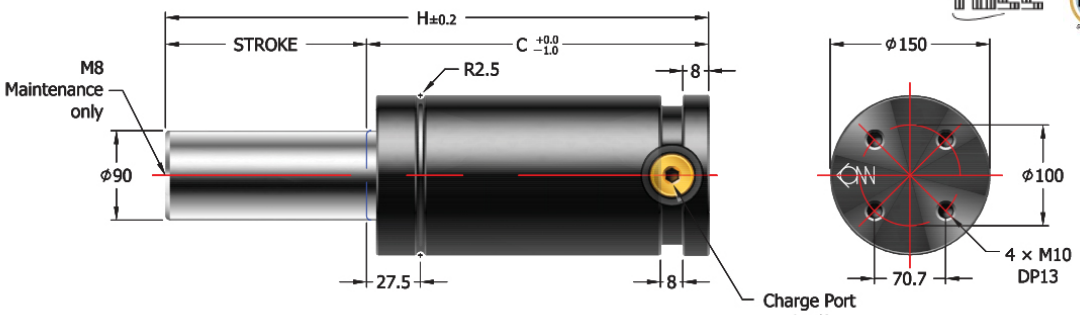

ORDER EXAMPLE	Model	S - Charging Pressure
	18TSP9500-050-150	

ความดันเริ่มต้นหากไม่ระบุ จะเท่ากับ 150Bar
Charging Pressure if not mention is

S	H	C	Force		Gas Vol. (cm3)	Weight (kg)
			Initial (N)	End (N)		
020	118	98	95,000	127,600	509.9	10.78
025	128	103		131,000	591.6	11.10
030	138	108		133,700	673.3	11.60
035	148	113		135,900	755.0	12.84
038	154	116		137,000	804.0	13.18
040	158	118		137,700	836.6	13.24
045	168	123		139,200	918.3	14.48
050	178	128		140,500	1000.0	14.70
060	198	138		142,600	1163.3	15.50
063	204	141		143,100	1212.3	15.64
070	218	148		144,200	1326.7	16.20
075	228	153		144,900	1408.4	17.30
080	238	158		145,500	1490.0	18.10
090	258	168		146,500	1653.4	19.60
100	278	178		147,400	1816.7	20.44
125	328	203		149,100	2225.1	21.20

Charging Pressure

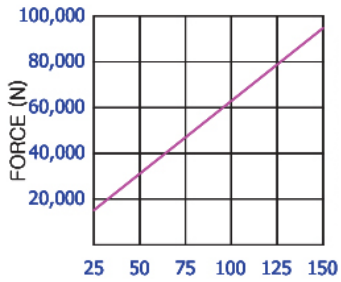

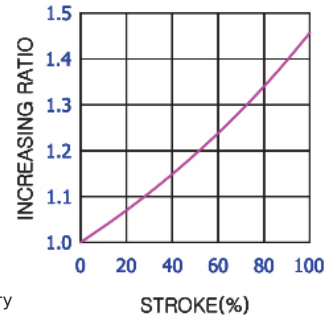

ORDER EXAMPLE	Model
	18XP9500

รายละเอียดโปรดดูหน้า Mounting ด้านหลังหมวดหมู่นี้
Mounting specification please see at the back of this category

Mounting Model:
18MS

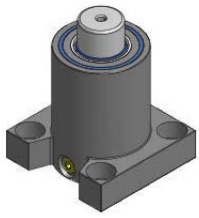

Mounting Model:
18XB9500(SB7500)



Mounting Model:
18XR9500(SR7500)



Mounting Model:
18XT9500(ST7500)



Mounting Model:
18XP9500(SP7500)



Mounting Model:
18XC9500(SC7500)

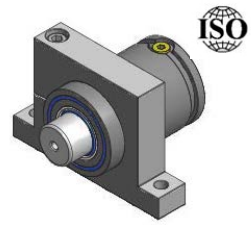

SUN RISE technologies
Tel: +662-324-3184-(89) Fax: +662-324-3190 / +662-324-3103
Website: www.sunrisegr.com Email: sale@sunrisegr.com

TSX Gas Spring

Model: 18TSX0350

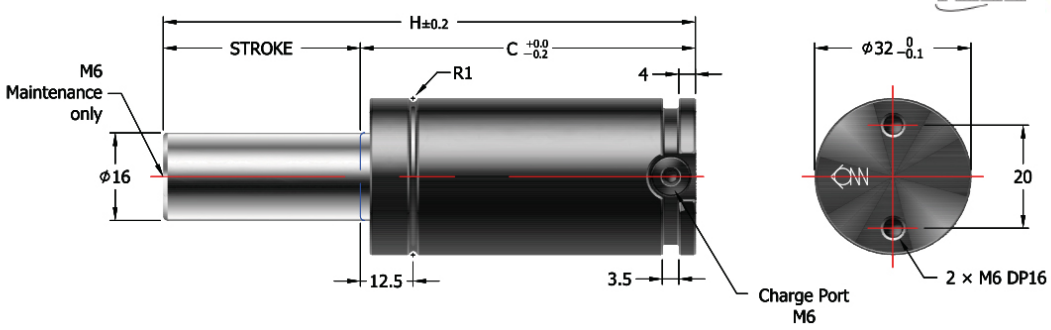

ORDER EXAMPLE | Model: S - Charging Pressure | 18TSX0350-050-180

ความดันเริ่มต้นหากไม่ระบุ จะเท่ากับ Charging Pressure if not mention is **180Bar**

S	H	C	Force		Gas Vol. (cm3)	Weight (kg)
			Initial (N)	End (N)		
010	60	50	3,600	5,000	7.2	0.26
013	66	53		5,100	9.0	0.27
016	72	56		5,200	10.8	0.27
020	80	60		5,200	13.3	0.29
025	90	65		5,200	16.3	0.31
030	100	70		5,300	19.4	0.32
035	110	75		5,300	22.4	0.34
038	116	78		5,300	24.2	0.35
040	120	80		5,300	25.4	0.35
045	130	85		5,300	28.5	0.38
050	140	90		5,300	31.5	0.39
060	160	100		5,300	37.6	0.43
063	166	103		5,300	39.5	0.43
070	180	110		5,300	43.7	0.46
075	190	115		5,300	46.8	0.47
080	200	120		5,300	49.8	0.49
090	220	130		5,300	55.9	0.52
100	240	140		5,400	62.5	0.55
125	290	165		5,400	77.2	0.64

Charging Pressure

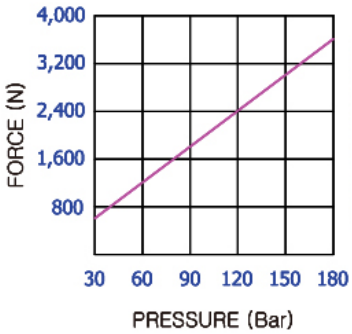

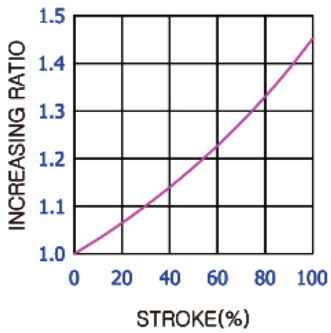

ORDER EXAMPLE | Model | 18XP0350

รายละเอียดโปรดดูหน้า Mounting ด้านหลังหมวดหมู่นี้
Mounting specification please see at the back of this category

Mounting Model:
18XP0350

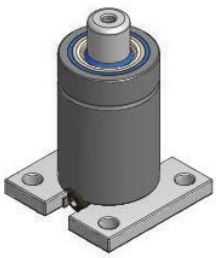

Mounting Model:
18XR0350



แก๊สสปริง

TSX Gas Spring

Model: 18TSX0500

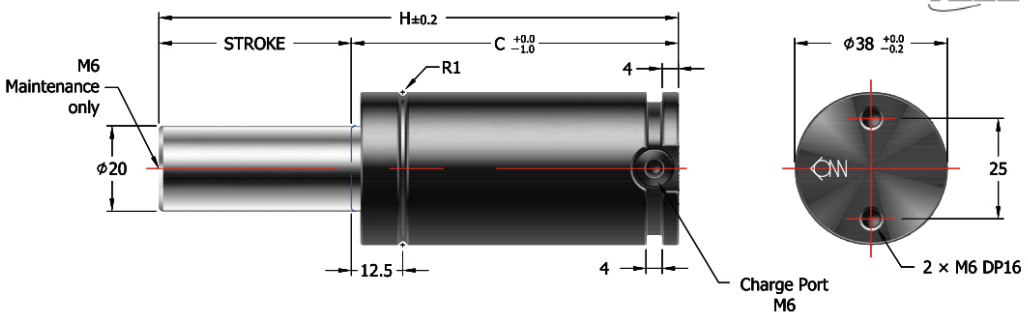

ORDER EXAMPLE: Model S - Charging Pressure — 18TSX0500-050-150

ความดันเริ่มต้นหากไม่ระบุ จะเท่ากับ Charging Pressure if not mention is 150Bar

S	H	C	Force		Gas Vol. (cm3)	Weight (kg)
			Initial (N)	End (N)		
010	60	50		6,700	10.4	0.35
013	66	53		6,800	13.1	0.37
016	72	56		6,900	15.7	0.38
020	80	60		7,000	19.3	0.40
025	90	65		7,000	23.7	0.42
030	100	70		7,100	28.2	0.45
035	110	75		7,100	32.6	0.47
038	116	78		7,100	35.3	0.48
040	120	80		7,100	37.0	0.50
045	130	85	4,700	7,100	41.5	0.52
050	140	90		7,200	45.9	0.55
060	160	100		7,200	54.8	0.60
063	166	103		7,200	57.4	0.61
070	180	110		7,200	63.6	0.64
075	190	115		7,200	68.1	0.66
080	200	120		7,200	72.5	0.69
090	220	130		7,200	81.4	0.74
100	240	140		7,200	90.3	0.79
125	290	165		7,200	112.4	0.91

Charging Pressure

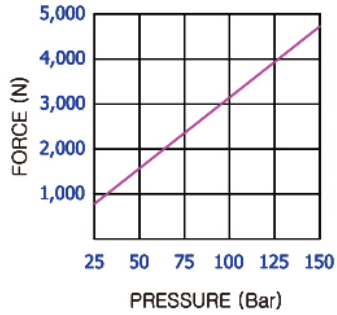

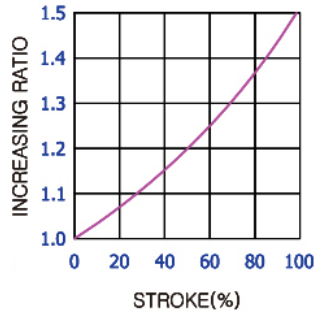

ORDER EXAMPLE: Model — 18XP0500

รายละเอียดโปรดดูหน้า Mounting ด้านหลังหมวดหมู่นี้
Mounting specification please see at the back of this category

Mounting Model:
18XP0500(XP0300)



Mounting Model:
18XR0500(XR0300)



Mounting Model:
18XT0500(XT0300)



Mounting Model:
18XC0500(XC0300)

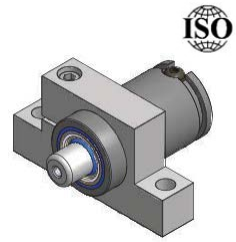

Gas Springs

SUN RISE technologies
Tel: +662-324-3184-(89) Fax: +662-324-3190 / +662-324-3103
Website: www.sunrisegr.com Email: sale@sunrisegr.com

TSX Gas Spring

Model: 18TSX0750

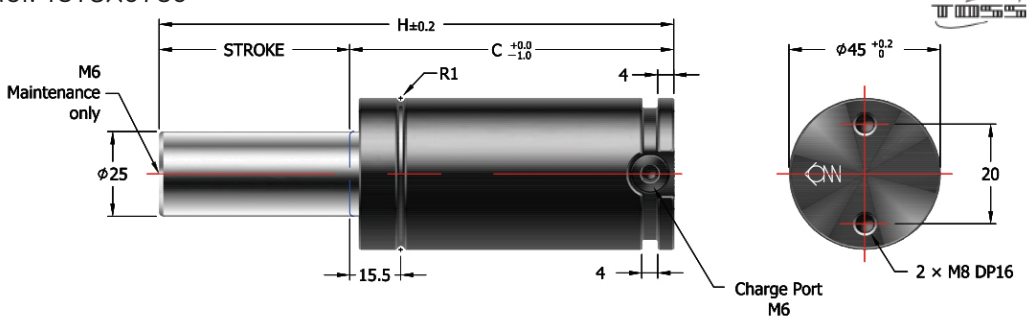

ORDER EXAMPLE Model: S - Charging Pressure
18TSX0750-050-150

ความดันเริ่มต้นหากไม่ระบุ จะเท่ากับ
Charging Pressure if not mention is **150Bar**

S	H	C	Force		Gas Vol. (cm3)	Weight (kg)
			Initial (N)	End (N)		
010	67	57		10,200	17.9	0.55
013	73	60		10,500	21.8	0.57
016	79	63		10,600	25.7	0.59
020	87	67		10,800	30.9	0.62
025	97	72		11,000	37.4	0.65
030	107	77		11,100	43.9	0.68
035	117	82		11,200	50.4	0.71
038	123	85		11,300	54.3	0.73
040	127	87		11,300	57.0	0.74
045	137	92	7,400	11,300	63.5	0.78
050	147	97		11,400	70.0	0.81
060	167	107		11,500	83.0	0.87
063	173	110		11,500	86.9	0.89
070	187	117		11,500	96.0	0.94
075	197	122		11,500	102.5	0.97
080	207	127		11,600	109.0	1.00
090	227	137		11,600	122.0	1.07
100	247	147		11,600	135.0	1.13
125	297	172		11,700	167.6	1.29

Charging Pressure

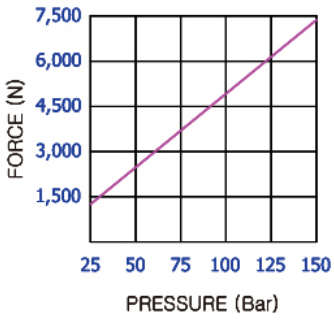

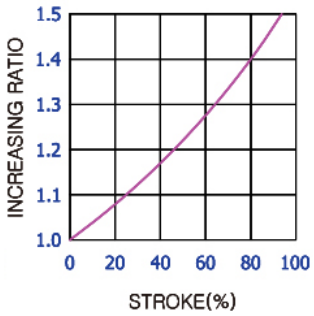

ORDER EXAMPLE Model
18XP0750

รายละเอียดโปรดดูหน้า Mounting ด้านหลังหมวดหมู่นี้
Mounting specification please see at the back of this category

Mounting Model:
18XP0750(SP0500)



Mounting Model:
18XR0750(SR0500)



Mounting Model:
18XT0750(ST0500)



Mounting Model:
18XB0750(SB0500)



Mounting Model:
18XC0750(SC0500)



แก๊สสปริง

TSX Gas Spring

Model: 18TSX1000

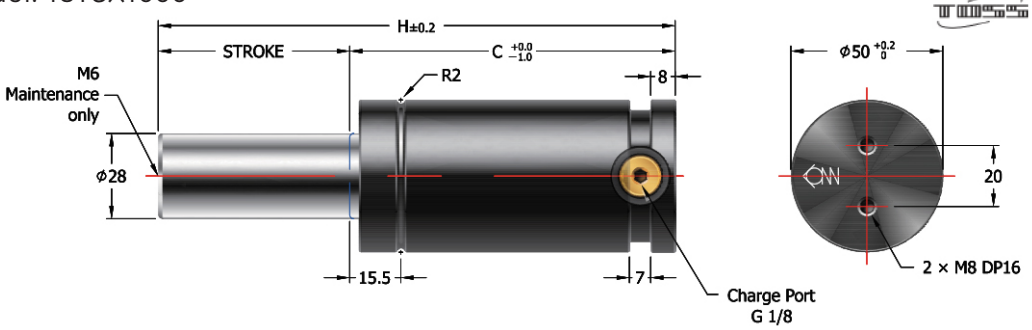

ORDER EXAMPLE Model - S - Charging Pressure
18TSX1000-050-150

ความดันเริ่มต้นหากไม่ระบุ จะเท่ากับ Charging Pressure if not mention is **150Bar**

S	H	C	Force		Gas Vol. (cm3)	Weight (kg)
			Initial (N)	End (N)		
013	78	65	9,200	12,200	32.7	0.71
016	84	68		12,500	37.4	0.74
020	92	72		12,800	43.7	0.77
025	102	77		13,200	51.6	0.81
030	112	82		13,400	59.4	0.65
035	122	87		13,600	67.3	0.89
038	128	90		13,700	72.0	0.91
040	132	92		13,700	75.1	0.93
045	142	97		13,900	83.0	0.97
050	152	102		14,000	90.8	1.02
060	172	112		14,100	106.5	1.09
063	178	115		14,200	111.2	1.11
070	192	122		14,300	122.2	1.17
075	202	127		14,300	130.1	1.22
080	212	132		14,400	137.9	1.25
090	232	142		14,400	153.6	1.34
100	252	152		14,500	169.2	1.42
125	302	177		14,600	208.6	1.62

Charging Pressure

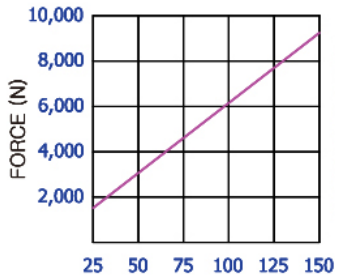

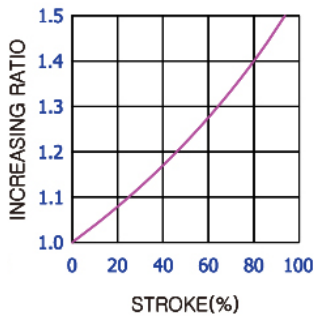

ORDER EXAMPLE Model
18XP1000

รายละเอียดโปรดดูหน้า Mounting ด้านหลังหมวดหมู่นี้
Mounting specification please see at the back of this category

Mounting Model:
18MD



Mounting Model:
18MS



Mounting Model:
18MK

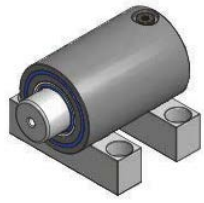

Mounting Model:
18XP1000(SP0750)



Mounting Model:
18XB1000(SB0750)



Mounting Model:
18XT1000(ST0750)



Mounting Model:
18XR1000(SR0750)



Mounting Model:
18XC1000(SC0750)

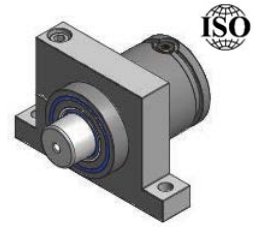

Gas Springs

SUN RISE technologies
Tel: +662-324-3184-(89) Fax: +662-324-3190 / +662-324-3103
Website: www.sunrisegr.com Email: sale@sunrisegr.com

TSX Gas Spring

Model: 18TSX1500

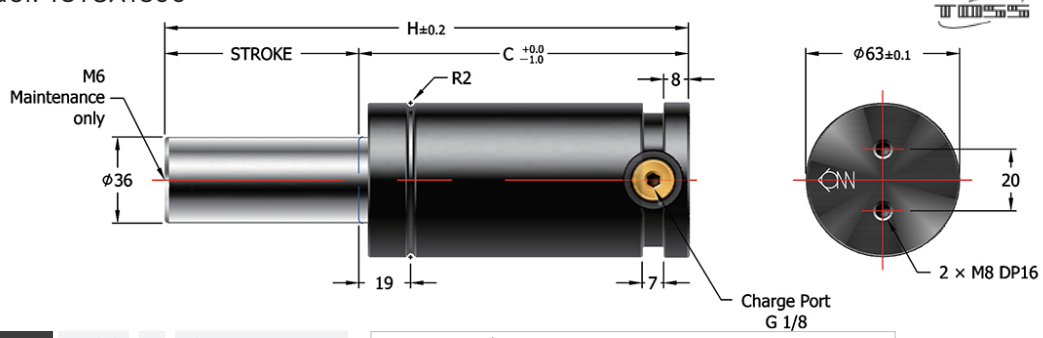

ORDER EXAMPLE: Model - S - Charging Pressure
18TSX1500-050-150

ความดันเริ่มต้นหากไม่ระบุ จะเท่ากับ
Charging Pressure if not mention is **150Bar**

S	H	C	Force		Gas Vol. (cm3)	Weight (kg)
			Initial (N)	End (N)		
013	78	65	15,200	20,500	50.7	1.20
016	84	68		21,000	58.7	1.24
020	92	72		21,500	69.3	1.29
025	102	77		21,900	82.6	1.36
030	112	82		22,200	95.8	1.43
035	122	87		22,500	109.1	1.50
038	128	90		22,600	117.1	1.53
040	132	92		22,700	122.4	1.56
045	142	97		22,900	135.6	1.63
050	152	102		23,000	148.9	1.74
060	172	112		23,200	175.4	1.82
063	178	115		23,300	183.4	1.87
070	192	122		23,400	202.0	1.96
075	202	127		23,500	215.2	2.03
080	212	132		23,500	228.2	2.09
090	232	142		23,600	254.8	2.23
100	252	152		23,700	281.4	2.35
125	302	177		23,900	347.9	2.69

Charging Pressure

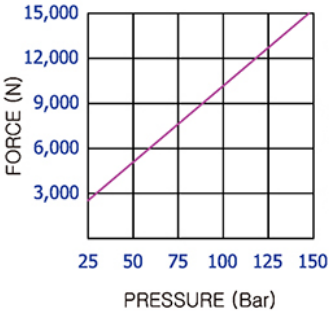

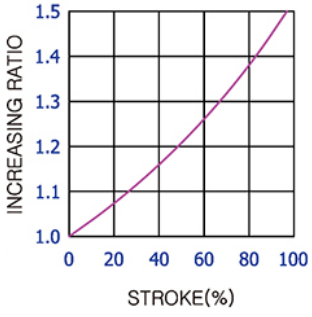

ORDER EXAMPLE: Model
18XP1500

รายละเอียดโปรดดูหน้า Mounting ด้านหลังหมวดหมู่นี้
Mounting specification please see at the back of this category

Mounting Model:
18MD



Mounting Model:
18MS



Mounting Model:
18MK



Mounting Model:
18XP1500



Mounting Model:
18XB1500



Mounting Model:
18XT1500



Mounting Model:
18XR1500



Mounting Model:
18XC1500

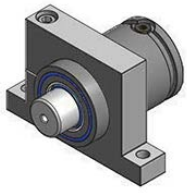

แก๊สสปริง

TSX Gas Spring

Model: 18TSX2400

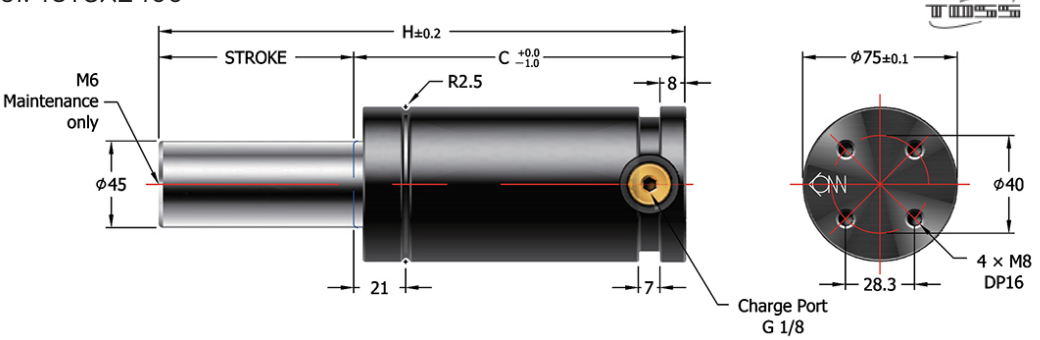

ORDER EXAMPLE	Model - S - Charging Pressure
	18TSX2400-050-150

ความดันเริ่มต้นหากไม่ระบุ จะเท่ากับ Charging Pressure if not mention is **150Bar**

S	H	C	Force		Gas Vol. (cm3)	Weight (kg)
			Initial (N)	End (N)		
016	91	75	23,800	33,000	91.5	1.96
020	99	79		33,800	107.6	2.03
025	109	84		34,600	127.7	2.11
030	119	89		35,100	147.8	2.19
035	129	94		35,600	167.9	2.27
038	135	97		35,800	180.0	2.32
040	139	99		36,000	188.0	2.35
045	149	104		36,300	208.2	2.43
050	159	109		36,500	228.3	2.51
060	179	119		36,900	268.5	2.68
063	185	122		37,000	280.6	2.72
070	199	129		37,200	308.7	2.85
075	209	134		37,300	328.8	2.93
080	219	139		37,400	349.0	3.01
090	239	149		37,600	389.2	3.17
100	259	159		37,800	429.4	3.33
125	309	184		38,100	530.0	3.75

Charging Pressure

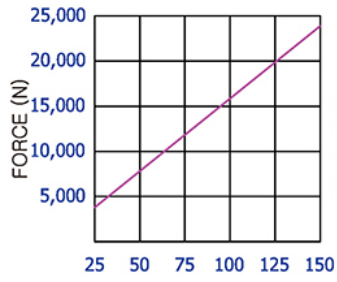

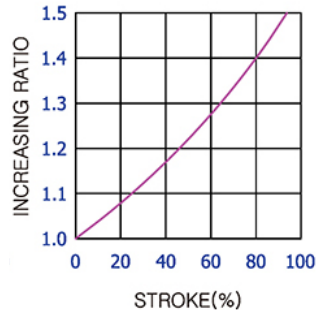

ORDER EXAMPLE	Model
	18XP2400

รายละเอียดโปรดดูหน้า Mounting ด้านหลังหมวดหมู่นี้
Mounting specification please see at the back of this category

Mounting Model:
18MD



Mounting Model:
18MS



Mounting Model:
18MK



Mounting Model:
18XP2400(SP1500)

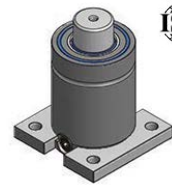

Mounting Model:
18XB2400(SB1500)



Mounting Model:
18XT2400(ST1500)



Mounting Model:
18XR2400(SR1500)



Mounting Model:
18XC2400(SC1500)

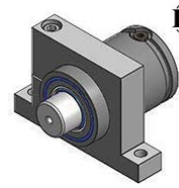

Gas Springs

SUN RISE technologies
Tel: +662-324-3184-(89) Fax: +662-324-3190 / +662-324-3103
Website: www.sunrisegr.com Email: sale@sunrisegr.com

TSX Gas Spring

Model: 18TSX4200

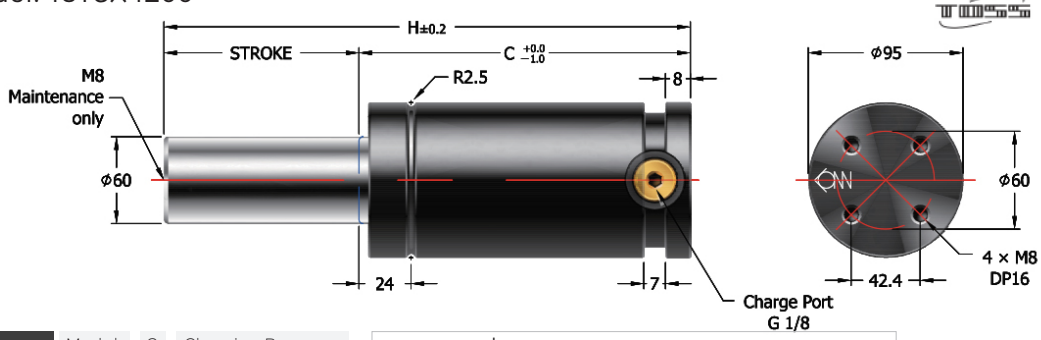

ORDER EXAMPLE Model - S - Charging Pressure
18TSX4200-050-150

ความดันเริ่มต้นหากไม่ระบุ จะเท่ากับ
Charging Pressure if not mention is **150Bar**

S	H	C	Force		Gas Vol. (cm3)	Weight (kg)
			Initial (N)	End (N)		
016	94	78	42,200	59,000	158.4	3.27
020	102	82		60,600	185.7	3.38
025	112	87		62,100	219.9	3.52
030	122	92		63,300	254.1	3.66
035	132	97		64,200	288.2	3.81
038	138	100		64,600	308.7	3.88
040	142	102		64,900	322.4	3.94
045	152	107		65,500	356.6	4.08
050	162	112		66,000	390.7	4.22
060	182	122		66,800	459.1	4.50
063	188	125		67,000	479.6	4.58
070	202	132		67,400	527.4	4.78
075	212	137		67,700	561.5	4.92
080	222	142		67,900	595.7	5.06
090	242	152		68,300	664.0	5.33
100	262	162		68,600	732.4	5.62
125	312	187		69,200	903.2	6.31

Charging Pressure

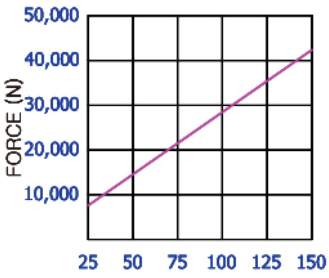

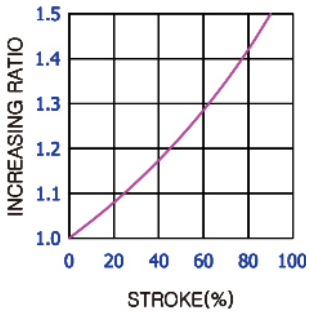

ORDER EXAMPLE Model
18XP4200

รายละเอียดโปรดดูหน้า Mounting ด้านหลังหมวดหมู่นี้
Mounting specification please see at the back of this category

Mounting Model:
18MD



Mounting Model:
18MS



Mounting Model:
18MK

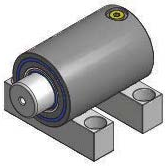

Mounting Model:
18XP4200(SP3000)



Mounting Model:
18XB4200(SB3000)



Mounting Model:
18XT4200(ST3000)



Mounting Model:
18XR4200(SR3000)



Mounting Model:
18XC4200(SC3000)



แก๊สสปริง

TSX Gas Spring

Model: 18TSX6600

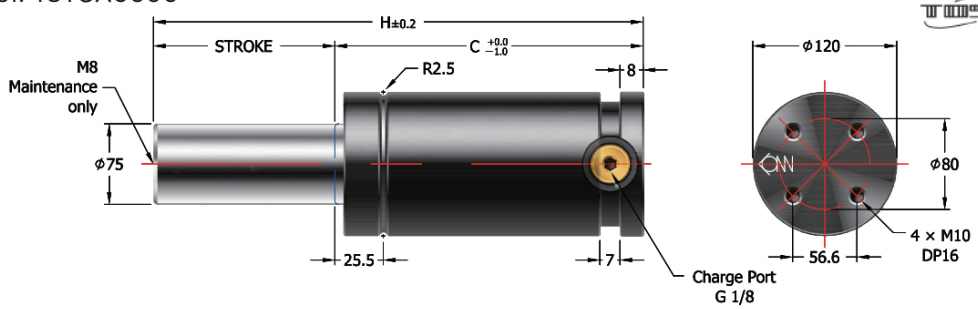

ORDER EXAMPLE Model - S - Charging Pressure
18TSX6600-050-150

ความดันเริ่มต้นหากไม่ระบุ จะเท่ากับ
Charging Pressure if not mention is **150Bar**

S	H	C	Force		Gas Vol. (cm3)	Weight (kg)
			Initial (N)	End (N)		
016	104	88	66,000	87,600	285.7	6.11
020	112	92		90,200	329.1	6.29
025	122	97		92,600	383.5	6.52
030	132	102		94,600	437.8	6.75
035	142	107		96,200	492.1	6.97
038	148	110		97,000	524.7	7.11
040	152	112		97,500	546.5	7.21
045	162	117		98,600	600.8	7.43
050	172	122		99,500	655.2	7.66
060	192	132		101,000	763.8	8.11
063	198	135		101,400	796.4	8.25
070	212	142		102,100	872.5	8.57
075	222	147		102,600	926.8	8.80
080	232	152		103,100	981.2	9.03
090	252	162		103,800	1089.9	9.48
100	272	172		104,400	1198.5	9.94
125	322	197		105,600	1470.2	11.08

Charging Pressure

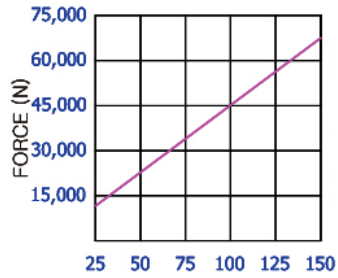

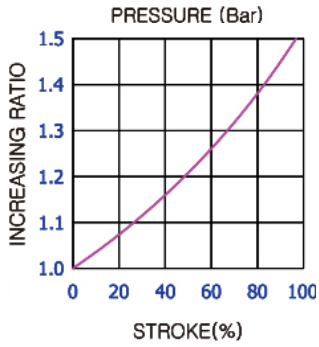

ORDER EXAMPLE Model
18XP6600

รายละเอียดโปรดดูหน้า Mounting ด้านหลังหมวดหมู่นี้
Mounting specification please see at the back of this category

Mounting Model:
18MD



Mounting Model:
18MS

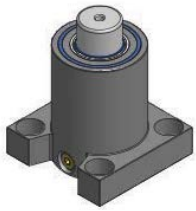

Mounting Model:
18MK

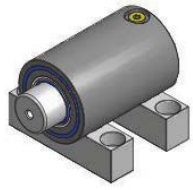

Mounting Model:
18XP6600(SP5000)

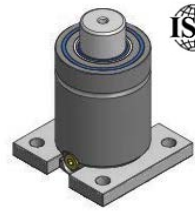

Mounting Model:
18XB6600(SB5000)



Mounting Model:
18XT6600(ST5000)



Mounting Model:
18XR6600(SR5000)



Mounting Model:
18XC6600(SC5000)

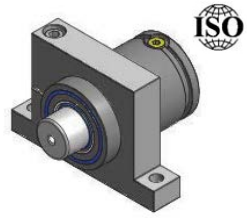

Gas Springs

SUN RISE technologies
Tel: +662-324-3184-(89) Fax: +662-324-3190 / +662-324-3103
Website: www.sunrisegr.com Email: sale@sunrisegr.com

TST Gas Spring

Model: 18TST1000

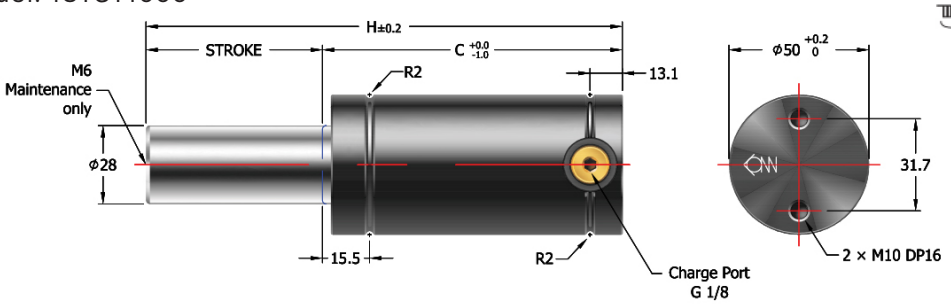

ORDER EXAMPLE Model - S - Charging Pressure
18TST1000-050-150

ความดันเริ่มต้นหากไม่ระบุ จะเท่ากับ
Charging Pressure if not mention is **150Bar**

S	H	C	Force		Gas Vol. (cm3)	Weight (kg)
			Initial (N)	End (N)		
013	78	65	9,200	12,200	32.7	0.71
016	84	68		12,500	37.4	0.74
020	92	72		12,800	43.7	0.77
025	102	77		13,200	51.6	0.81
030	112	82		13,400	59.4	0.65
035	122	87		13,600	67.3	0.89
038	128	90		13,700	72.0	0.91
040	132	92		13,700	75.1	0.93
045	142	97		13,900	83.0	0.97
050	152	102		14,000	90.8	1.02
060	172	112		14,100	106.5	1.09
063	178	115		14,200	111.2	1.11
070	192	122		14,300	122.2	1.17
075	202	127		14,300	130.1	1.22
080	212	132		14,400	137.9	1.25
090	232	142		14,400	153.6	1.34
100	252	152		14,500	169.2	1.42
125	302	177		14,600	208.6	1.62

Charging Pressure

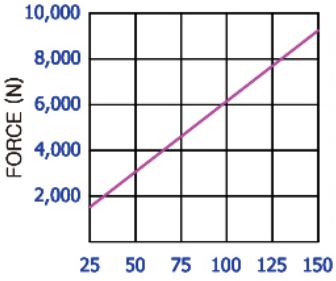

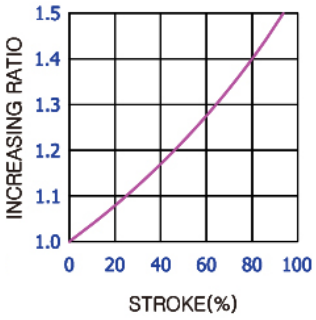

ORDER EXAMPLE Model
18TB1000

รายละเอียดโปรดดูหน้า Mounting ด้านหลังหมวดหมู่นี้
Mounting specification please see at the back of this category

Mounting Model:
18MD



Mounting Model:
18MS



Mounting Model:
18MK



Mounting Model:
18TB1000



Mounting Model:
18XT1000(ST0750)



Mounting Model:
18XR1000(SR0750)



Mounting Model:
18XC1000(SC0750)



แก๊สสปริง

TST Gas Spring

Model: 18TST2400

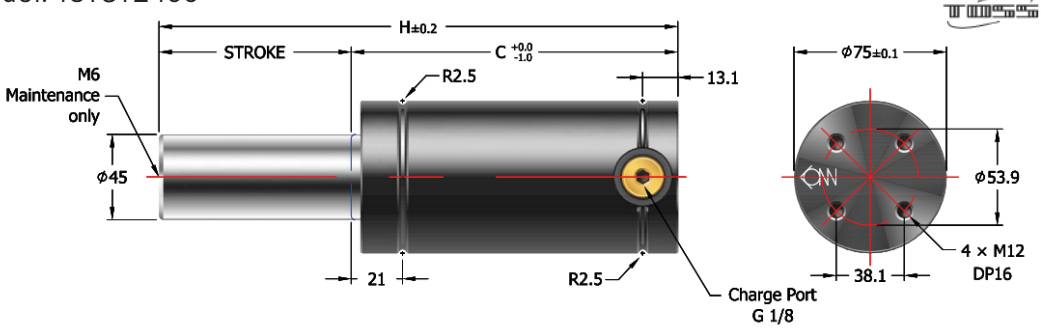

ORDER EXAMPLE: Model - S - Charging Pressure
18TST2400-050-150

ความดันเริ่มต้นหากไม่ระบุ จะเท่ากับ 150Bar
Charging Pressure if not mention is

S	H	C	Force		Gas Vol. (cm3)	Weight (kg)
			Initial (N)	End (N)		
013	78	65	23,800	12,200	32.7	0.71
016	84	68		12,500	37.4	0.74
020	92	72		12,800	43.7	0.77
025	102	77		13,200	51.6	0.81
030	112	82		13,400	59.4	0.65
035	122	87		13,600	67.3	0.89
038	128	90		13,700	72.0	0.91
040	132	92		13,700	75.1	0.93
045	142	97		13,900	83.0	0.97
050	152	102		14,000	90.8	1.02
060	172	112		14,100	106.5	1.09
063	178	115		14,200	111.2	1.11
070	192	122		14,300	122.2	1.17
075	202	127		14,300	130.1	1.22
080	212	132		14,400	137.9	1.25
090	232	142		14,400	153.6	1.34
100	252	152		14,500	169.2	1.42
125	302	177		14,600	208.6	1.62

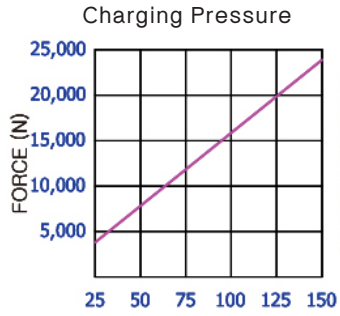

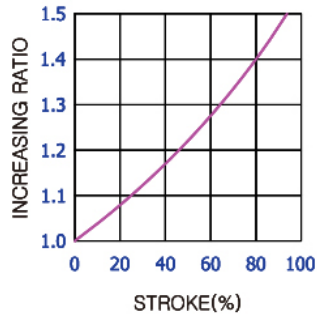

ORDER EXAMPLE: Model
18TB2400

รายละเอียดโปรดดูหน้า Mounting ด้านหลังหมวดหมู่นี้
Mounting specification please see at the back of this category

Mounting Model:
18MD



Mounting Model:
18MS



Mounting Model:
18MK



Mounting Model:
18TB2400



Mounting Model:
18XT2400(ST1500)



Mounting Model:
18XR2400(SR1500)



Mounting Model:
18XC2400(SC1500)



SUN RISE technologies
Tel: +662-324-3184-(89) Fax: +662-324-3190 / +662-324-3103
Website: www.sunrisegr.com Email: sale@sunrisegr.com

TST Gas Spring

Model: 18TST4200

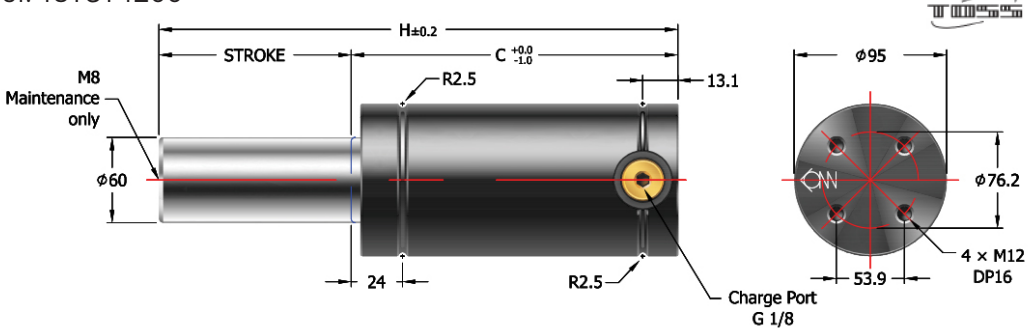

ORDER EXAMPLE	Model	-	S	-	Charging Pressure
	18TST4200	-	050	-	150

ความดันเริ่มต้นหากไม่ระบุ จะเท่ากับ
Charging Pressure if not mention is **150Bar**

S	H	C	Force		Gas Vol. (cm3)	Weight (kg)
			Initial (N)	End (N)		
016	94	78	42,200	59,000	158.4	3.27
020	102	82		60,600	185.7	3.38
025	112	87		62,100	219.9	3.52
030	122	92		63,300	254.1	3.66
035	132	97		64,200	288.2	3.81
038	138	100		64,600	308.7	3.88
040	142	102		64,900	322.4	3.94
045	152	107		65,500	356.6	4.08
050	162	112		66,000	390.7	4.22
060	182	122		66,800	459.1	4.50
063	188	125		67,000	479.6	4.58
070	202	132		67,400	527.4	4.78
075	212	137		67,700	561.5	4.92
080	222	142		67,900	595.7	5.06
090	242	152		68,300	664.0	5.33
100	262	162		68,600	732.4	5.62
125	312	187		69,200	903.2	6.31

Charging Pressure

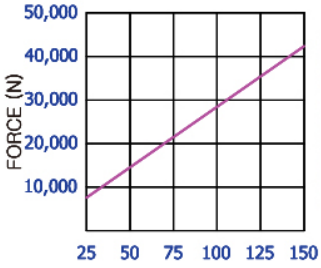

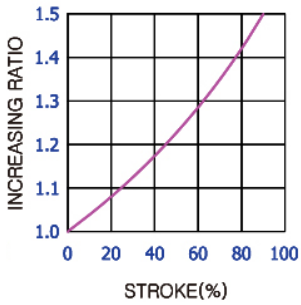

ORDER EXAMPLE	Model
	18TB4200

รายละเอียดโปรดดูหน้า Mounting ด้านหลังหมวดหมู่นี้
Mounting specification please see at the back of this category

Mounting Model:
18MD



Mounting Model:
18MS



Mounting Model:
18MK



Mounting Model:
18TB4200



Mounting Model:
18XT4200(ST3000)



Mounting Model:
18XR4200(SR3000)



Mounting Model:
18XC4200(SC3000)



แก๊สสปริง

TST Gas Spring

Model: 18TST6600

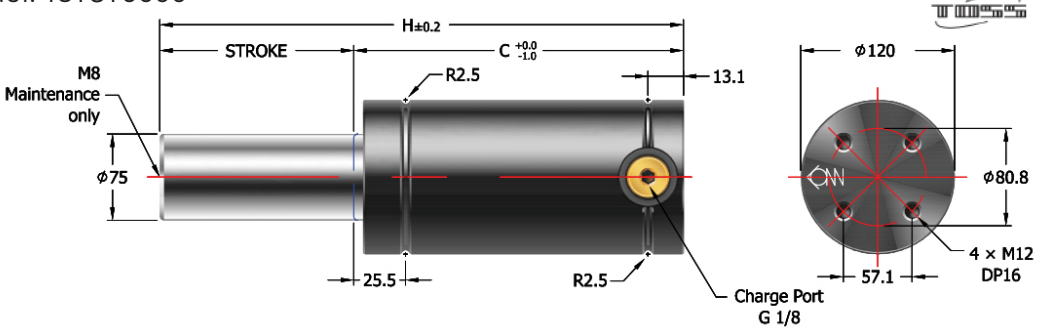

ORDER EXAMPLE: Model - S - Charging Pressure
18TST6600-050-150

ความดันเริ่มต้นหากไม่ระบุ จะเท่ากับ
Charging Pressure if not mention is **150Bar**

S	H	C	Force		Gas Vol. (cm3)	Weight (kg)
			Initial (N)	End (N)		
016	104	88	66,000	87,600	285.7	3.27
020	112	92		90,200	329.1	3.38
025	122	97		92,600	383.5	3.52
030	132	102		94,600	437.8	3.66
035	142	107		96,200	492.1	3.81
038	148	110		97,000	524.7	3.88
040	152	112		97,500	546.5	3.94
045	162	117		98,600	600.8	4.08
050	172	122		99,500	655.2	4.22
060	192	132		101,000	763.8	4.50
063	198	135		101,400	796.4	4.58
070	212	142		102,100	872.5	4.78
075	222	147		102,600	926.8	4.92
080	232	152		103,100	981.2	5.06
090	252	162		103,800	1089.9	5.33
100	272	172		104,400	1198.5	5.62
125	322	197		105,600	1470.2	6.31

Charging Pressure

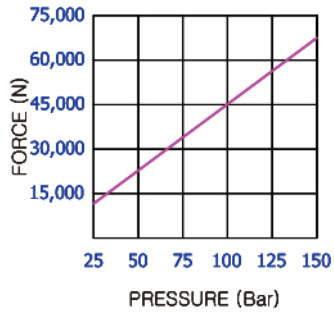

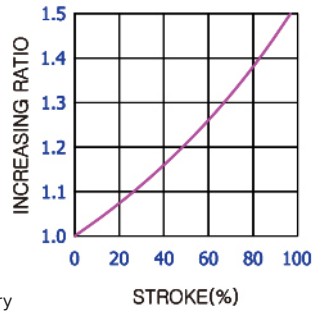

ORDER EXAMPLE: Model
18TB6600

รายละเอียดโปรดดูหน้า Mounting ด้านหลังหมวดหมู่นี้
Mounting specification please see at the back of this category

Mounting Model:
18MD



Mounting Model:
18MS



Mounting Model:
18MK



Mounting Model:
18TB6600



Mounting Model:
18XT6600(ST5000)



Mounting Model:
18XR6600(SR5000)



Mounting Model:
18XC6600(SC5000)



SUN RISE technologies
Tel: +662-324-3184-(89) Fax: +662-324-3190 / +662-324-3103
Website: www.sunrisegr.com Email: sale@sunrisegr.com

TST Gas Spring

Model: 18TST9500

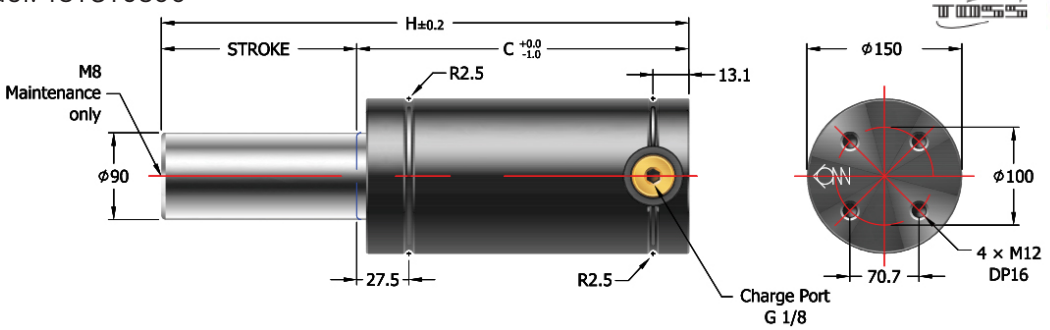

ORDER EXAMPLE Model - S - Charging Pressure
18TST9500-050-150

ความดันเริ่มต้นหากไม่ระบุ จะเท่ากับ
Charging Pressure if not mention is **150Bar**

S	H	C	Force		Gas Vol. (cm3)	Weight (kg)
			Initial (N)	End (N)		
020	118	98	95,000	127,600	509.9	10.78
025	128	103		131,000	591.6	11.10
030	138	108		133,700	673.3	11.60
035	148	113		135,900	755.0	12.84
038	154	116		137,000	804.0	13.18
040	158	118		137,700	836.6	13.24
045	168	123		139,200	918.3	14.48
050	178	128		140,500	1000.0	14.70
060	198	138		142,600	1163.3	15.50
063	204	141		143,100	1212.3	15.64
070	218	148		144,200	1326.7	16.20
075	228	153		144,900	1408.4	17.30
080	238	158		145,500	1490.0	18.10
090	258	168		146,500	1653.4	19.60
100	278	178		147,400	1816.7	20.44
125	328	203		149,100	2225.1	21.20

Charging Pressure

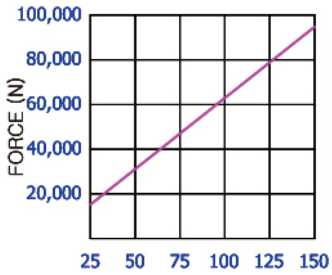

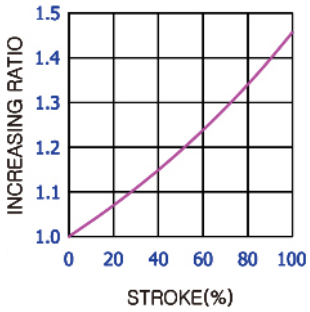

ORDER EXAMPLE Model
18TB9500

รายละเอียดโปรดดูหน้า Mounting ด้านหลังหมวดหมู่นี้
Mounting specification please see at the back of this category

Mounting Model:
18MS



Mounting Model:
18TB9500



Mounting Model:
18XR9500(SR7500)



Mounting Model:
18XT9500(ST7500)



Mounting Model:
18XC9500(SC7500)



แก๊สสปริง

TSM Gas Spring

Model: 18TSM0050

รุ่นนี้มีสีที่กระบอกตามค่าความดัน
This model body color response to charging pressure

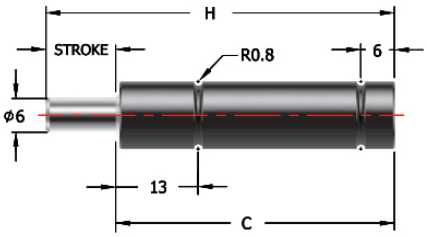

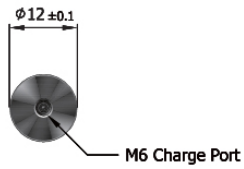



Charging Pessure	YELLOW	RED	BLUE	GREEN
	180Bar	135Bar	90Bar	45Bar

ORDER EXAMPLE Model - S - Charging Pressure
18TSM0050-050-135

ระบุความดันเริ่มต้น หรือสีที่ต้องการ
Specify Charging Pressure or color

เกลียวด้านล่างสำหรับรุ่น strokes 7-25มม.
Bottom thread only for strokes 7-25mm

S	H	C	Force (Yellow)		Force (Red)		Force (Blue)		Force (Green)		Gas Vol. (cm3)	Weight (kg)
			Start (N)	End (N)	Start (N)	End (N)	Start (N)	End (N)	Start (N)	End (N)		
007	56	49	180	700	135	500	90	400	45	200	0.8	0.03
010	62	52		700		600		400		200	1.1	0.03
013	67.4	54.7		800		600		400		200	1.3	0.03
015	72	57		800		600		400		200	1.5	0.03
019	80	61		800		600		400		200	1.8	0.04
025	92	67		800		600		400		200	2.2	0.04
038	118	80		800		600		400		200	3.3	0.04
050	142	92		800		600		400		200	4.2	0.05
064	172	108.5		800		600		400		200	5.5	0.06
075	195	120		800		600		400		200	6.4	0.06
080	205	125		800		600		400		200	6.8	0.07
100	245	145		800		600		400		200	8.4	0.07
125	295	170		800		600		400		200	10.3	0.09

ORDER EXAMPLE Model
18SG50

รายละเอียดโปรดดูหน้า Mounting ด้านหลังหมวดหมู่นี้
Mounting specification please see at the back of this category

Mounting Model:
18SG50



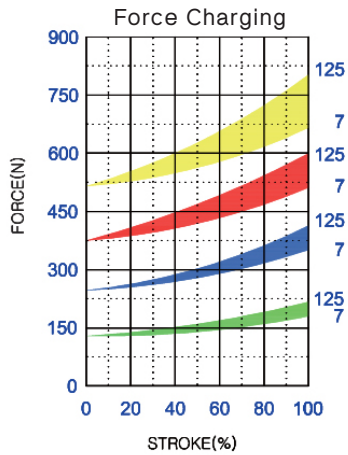

TSM Gas Spring

Model: 18TSM0070

รุ่นนี้มีสีที่กระบอกตามค่าความดัน
This model body color response to charging pressure

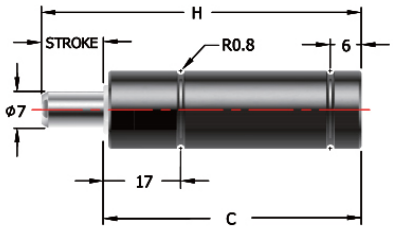

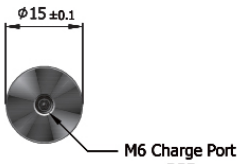



Charging Pessure	YELLOW	RED	BLUE	GREEN
	180Bar	135Bar	90Bar	45Bar

ORDER EXAMPLE Model - S - Charging Pressure
18TSM0070-050-135

ระบุความดันเริ่มต้น หรือสีที่ต้องการ
Specify Charging Pressure or color

เกลียวด้านล่างสำหรับรุ่น strokes 7-25มม.
Bottom thread only for strokes 7-25mm

S	H	C	Force (Yellow)		Force (Red)		Force (Blue)		Force (Green)		Gas Vol. (cm3)	Weight (kg)
			Start (N)	End (N)	Start (N)	End (N)	Start (N)	End (N)	Start (N)	End (N)		
007	56	49		900		700		500		200	1.2	0.05
010	62	52		1,000		700		500		200	1.5	0.05
013	68	55		1,000		700		500		200	1.9	0.05
015	72	57		1,000		800		500		300	2.1	0.05
019	80	61		1,000		800		500		300	2.5	0.05
025	92	67		1,000		800		500		300	3.2	0.06
038	118	80	700	1,100	500	800	350	500	180	300	4.7	0.07
050	142	92		1,100		800		500		300	6.0	0.08
064	172	108.5		1,100		800		500		300	7.9	0.09
075	195	120		1,100		800		500		300	9.2	0.10
080	205	125		1,100		800		500		300	9.8	0.11
100	245	145		1,100		800		500		300	12.0	0.12
125	295	170		1,100		800		500		300	14.9	0.14

ORDER EXAMPLE Model
18SG50

รายละเอียดโปรดดูหน้า Mounting ด้านหลังหมวดหมู่นี้
Mounting specification please see at the back of this category

Mounting Model:
18SG70



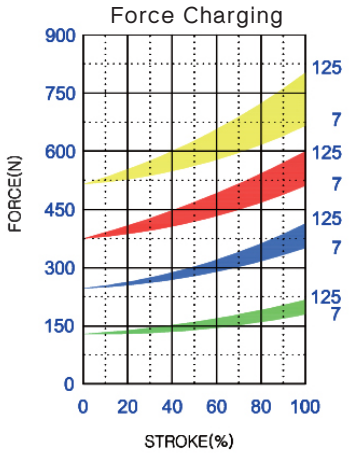

แก๊สสปริง

TSM Gas Spring

Model: 18TSM0090

รุ่นนี้มีสีที่กระบอกตามค่าความดัน
This model body color response to charging pressure

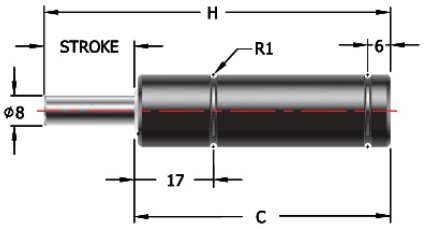

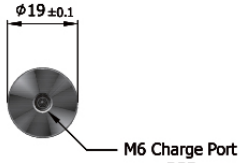



Charging Pessure	YELLOW	RED	BLUE	GREEN
	180Bar	140Bar	100Bar	60Bar

ORDER EXAMPLE Model - S - Charging Pressure
18TSM0090-050-135

ระบุความดันเริ่มต้น หรือสีที่ต้องการ
Specify Charging Pressure or color

เกลียวด้านล่างสำหรับรุ่น strokes 7-25มม.
Bottom thread only for strokes 7-25mm

S	H	C	Force (Yellow)		Force (Red)		Force (Blue)		Force (Green)		Gas Vol. (cm3)	Weight (kg)
			Start (N)	End (N)	Start (N)	End (N)	Start (N)	End (N)	Start (N)	End (N)		
007	56	49	900	1,100	700	800	500	600	300	400	2.3	0.07
010	62	52		1,100		800		600		400	2.9	0.08
013	67.4	54.7		1,100		900		600		400	3.5	0.08
015	72	57		1,100		900		600		400	3.9	0.08
019	80	61		1,100		900		600		400	4.7	0.08
025	92	67		1,100		900		600		400	5.9	0.10
038	118	80		1,200		900		600		400	8.5	0.10
050	142	92		1,200		900		600		400	11.0	0.12
064	172	108.5		1,200		900		600		400	14.3	0.13
075	195	120		1,200		900		600		400	16.6	0.14
080	205	125		1,200		900		600		400	17.6	0.14
100	245	145		1,200		900		700		400	21.6	0.17
125	295	170		1,200		900		700		400	26.6	0.20

ORDER EXAMPLE Model
18SG90

รายละเอียดโปรดดูหน้า Mounting ด้านหลังหมวดหมู่นี้
Mounting specification please see at the back of this category

Mounting Model:
18SG90



Mounting Model:
18SC90

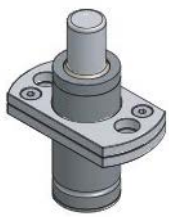

Mounting Model:
18SP90

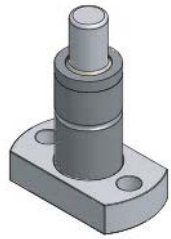

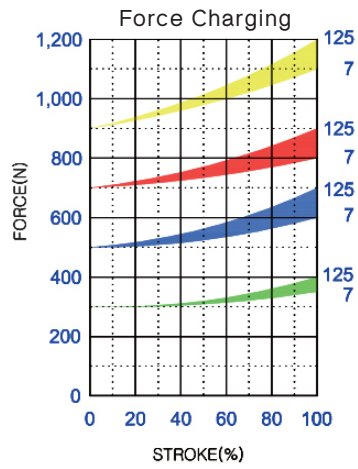

Gas Springs

SUN RISE technologies
Tel: +662-324-3184-(89) Fax: +662-324-3190 / +662-324-3103
Website: www.sunrisegr.com Email: sale@sunrisegr.com

TSM Gas Spring

Model: 18TSM0150

รุ่นนี้มีสีที่กระบอกตามค่าความดัน
This model body color response to charging pressure

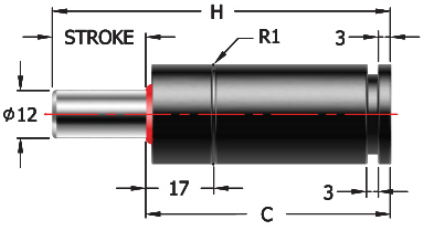

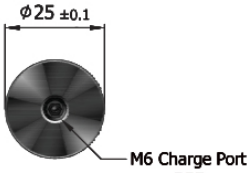



Charging Pessure	YELLOW	RED	BLUE	GREEN
	175Bar	135Bar	90Bar	45Bar

ORDER EXAMPLE Model - S - Charging Pressure
18TSM0150-050-135

ระบุความดันเริ่มต้น หรือสีที่ต้องการ
Specify Charging Pressure or color

เกลียวด้านล่างสำหรับรุ่น strokes 7-25มม.
Bottom thread only for strokes 7-25mm

S	H	C	Force (Yellow)		Force (Red)		Force (Blue)		Force (Green)		Gas Vol. (cm3)	Weight (kg)
			Start (N)	End (N)	Start (N)	End (N)	Start (N)	End (N)	Start (N)	End (N)		
010	62	52	2,000	2,600	1,500	2,000	1,000	1,300	500	700	4.7	0.14
013	68	55		2,700		2,000		1,300		700	5.7	0.15
015	72	57		2,700		2,000		1,300		700	6.4	0.16
016	74	58		2,700		2,000		1,400		700	6.8	0.16
020	82	62		2,700		2,100		1,400		700	8.1	0.17
025	92	67		2,800		2,100		1,400		700	9.9	0.18
030	102	72		2,800		2,100		1,400		700	11.6	0.19
035	112	77		2,800		2,100		1,400		700	13.3	0.20
038	118	80		2,800		2,100		1,400		700	14.4	0.21
040	122	82		2,800		2,100		1,400		700	15.1	0.22
045	132	87		2,800		2,100		1,400		700	16.8	0.23
050	142	92		2,800		2,100		1,400		700	18.5	0.24
060	165	105		2,800		2,100		1,400		700	22.0	0.27
063	172	109		2,800		2,100		1,400		700	23.4	0.27
070	185	115		2,900		2,200		1,400		700	25.4	0.29
080	205	125		2,900		2,200		1,400		700	28.9	0.32
100	245	145		2,900		2,200		1,400		700	35.8	0.36
125	295	170		2,900		2,200		1,400		700	44.5	0.40

ORDER EXAMPLE Model
18SG150

รายละเอียดโปรดดูหน้า Mounting ด้านหลังหมวดหมู่นี้
Mounting specification please see at the back of this category

Mounting Model:
18XP0150

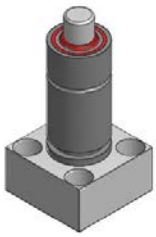

Mounting Model:
18XR0150



Mounting Model:
18XB0150



Mounting Model:
18SG0150



Force Charging

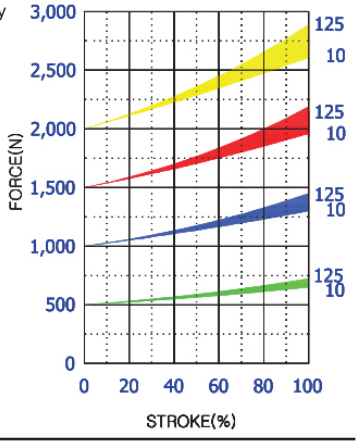

แก๊สสปริง

TSM Gas Spring

Model: 18TSM0300

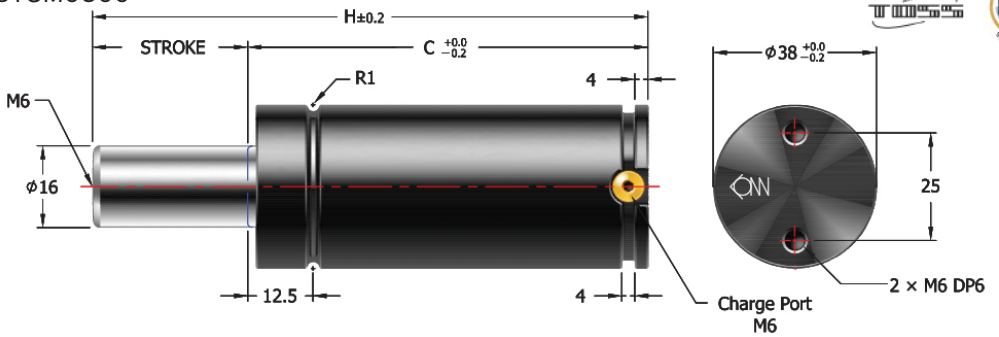

ORDER EXAMPLE Model - S - Charging Pressure

18TSM0300-050-150

ความดันเริ่มต้นหากไม่ระบุ จะเท่ากับ Charging Pressure if not mention is **150Bar**

S	H	C	Force (Yellow)		Gas Vol. (cm3)	Weight (kg)
			Start (N)	End (N)		
010	70	60		3,900	8.5	0.44
015	80	65		4,000	12.0	0.46
020	90	70		4,000	15.5	0.50
025	100	75		4,100	19.1	0.52
030	110	80		4,100	22.6	0.56
035	120	85		4,100	26.1	0.58
038	126	88		4,100	28.3	0.58
040	130	90		4,100	29.7	0.60
045	140	95		4,100	33.2	0.62
050	150	100	3,000	4,100	36.7	0.66
060	170	110		4,100	43.8	0.70
063	176	113		4,100	45.9	0.72
070	190	120		4,100	50.9	0.76
080	210	130		4,100	57.9	0.80
090	230	140		4,100	65.0	0.84
100	250	150		4,200	72.1	0.90
110	270	160		4,200	79.1	0.96
120	290	170		4,200	86.2	1.00
125	300	175		4,200	89.7	1.04

Charging Pressure

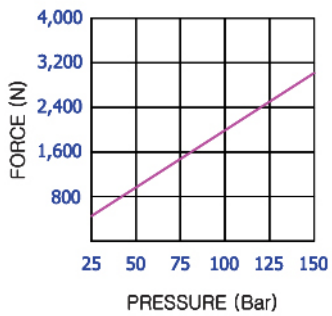

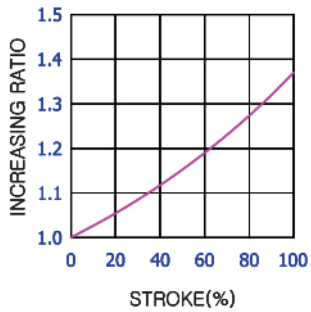

ORDER EXAMPLE Model

18XP0300

รายละเอียดโปรดดูหน้า Mounting ด้านหลังหมวดหมู่นี้
Mounting specification please see at the back of this category

Mounting Model:
18XP0300



Mounting Model:
18XR0300



Mounting Model:
18XT0300



Mounting Model:
18XC0300

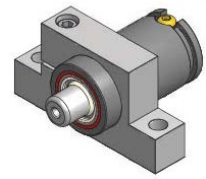

Mounting Model:
18SG0300 For TTM0300



Mounting Model:
18TTM0300 (Threaded Option)

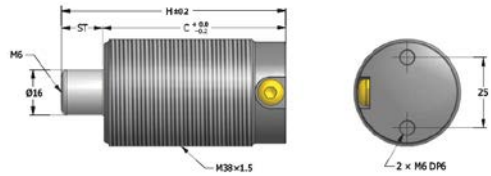

SUN RISE technologies
Tel: +662-324-3184-(89) Fax: +662-324-3190 / +662-324-3103
Website: www.sunrisegr.com Email: sale@sunrisegr.com

TSM Gas Spring

Model: 18TSM0500

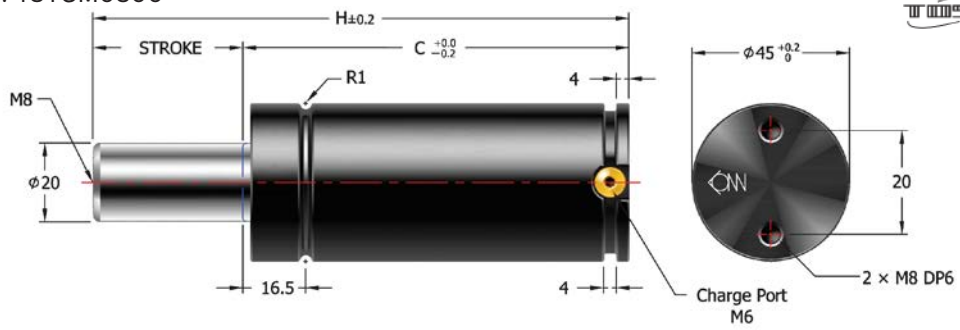

ORDER EXAMPLE Model - S - Charging Pressure
18TSM0500-050-150

ความดันเริ่มต้นหากไม่ระบุ จะเท่ากับ Charging Pressure if not mention is **150Bar**

S	H	C	Force (Yellow)		Gas Vol. (cm3)	Weight (kg)
			Start (N)	End (N)		
010	70	60	4,650	6,100	12.9	0.60
015	80	65		6,200	18.3	0.64
020	90	70		6,300	23.6	0.68
025	100	75		6,300	29.0	0.72
030	110	80		6,400	34.4	0.76
035	120	85		6,400	39.8	0.80
038	126	88		6,400	43.0	0.81
040	130	90		6,400	45.1	0.82
045	140	95		6,400	50.5	0.86
050	150	100		6,500	55.9	0.89
060	170	110		6,500	66.6	0.96
063	176	113		6,500	69.9	0.98
070	190	120		6,500	77.4	1.01
080	210	130		6,500	88.1	1.09
090	230	140		6,500	98.9	1.16
100	250	150		6,500	109.6	1.23
110	270	160		6,500	120.4	1.30
120	290	170		6,500	131.1	1.35
125	300	175		6,500	136.5	1.39

Charging Pressure

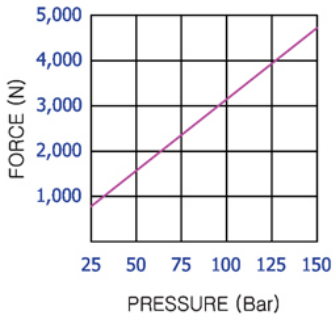

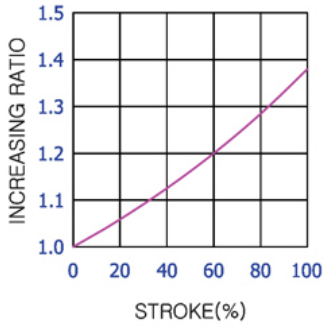

ORDER EXAMPLE Model
18SP0500

รายละเอียดโปรดดูหน้า Mounting ด้านหลังหมวดหมู่นี้
Mounting specification please see at the back of this category

Mounting Model:
18SP0500



Mounting Model:
18SR0500



Mounting Model:
18ST0500

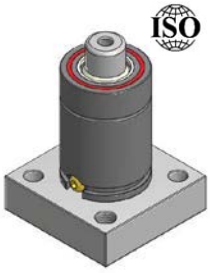

Mounting Model:
18SB0500



Mounting Model:
18SC0500



แก๊สสปริง

TSM Gas Spring

Model: 18TSM0750

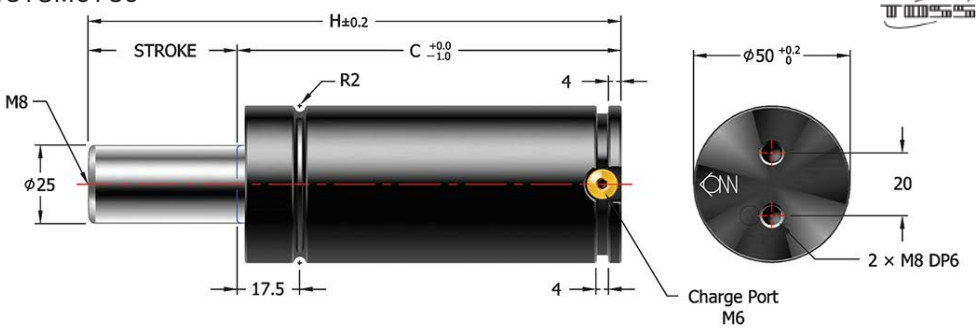

ORDER EXAMPLE: Model - S - Charging Pressure
18TSM0750-050-150

ความดันเริ่มต้นหากไม่ระบุ จะเท่ากับ Charging Pressure if not mention is 150Bar

S	H	C	Force (Yellow)		Gas Vol. (cm3)	Weight (kg)
			Start (N)	End (N)		
010	70	60	7,350	11,700	13.2	0.75
012.7	75.4	62.7		11,800	16.6	0.78
015	80	65		11,800	19.5	0.80
020	90	70		11,900	25.7	0.86
025	100	75		11,900	32.0	0.92
030	110	80		11,900	38.3	0.94
035	120	85		11,900	44.6	1.02
038	126	88		12,000	48.4	1.04
040	130	90		12,000	50.9	1.06
045	140	95		12,000	57.1	1.10
050	150	100		12,000	63.4	1.14
060	170	110		12,000	76.0	1.24
063	176	113		12,000	79.8	1.26
070	190	120		12,000	88.5	1.34
075	200	125		12,000	94.8	1.38
080	210	130		12,000	101.1	1.43
090	230	140		12,000	113.7	1.53
100	250	150		12,000	126.2	1.62
125	300	175		12,000	157.6	1.84

Charging Pressure

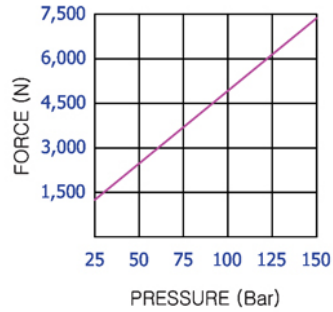

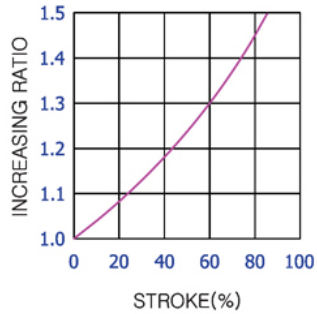

ORDER EXAMPLE: Model
18SB0750

รายละเอียดโปรดดูหน้า Mounting ด้านหลังหมวดหมู่นี้
Mounting specification please see at the back of this category

Mounting Model: 18MD



Mounting Model: 18MS



Mounting Model: 18MT



Mounting Model: 18MR



Mounting Model: 18MK



Mounting Model: 18SP0750M

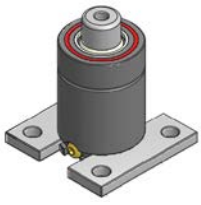

Mounting Model: 18SB0750 ISO



Mounting Model: 18ST0750 ISO



Mounting Model: 18SR0750 ISO



Mounting Model: 18SC0750 ISO

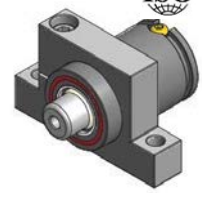

Gas Springs

SUN RISE technologies
Tel: +662-324-3184-(89) Fax: +662-324-3190 / +662-324-3103
Website: www.sunrisegr.com Email: sale@sunrisegr.com

TSM Gas Spring

Model: 18TSM1500

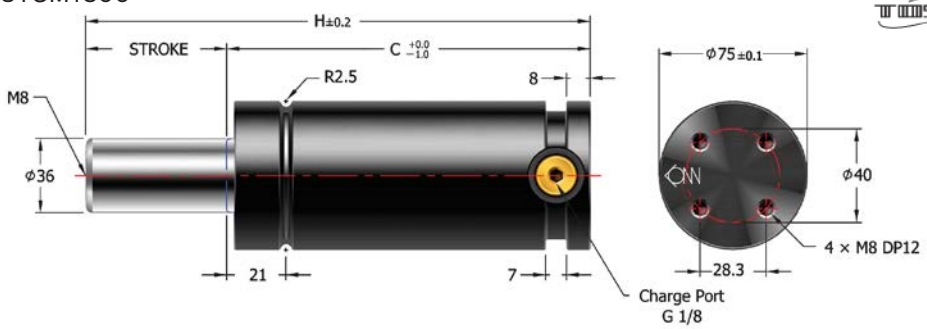

ORDER EXAMPLE Model - S - Charging Pressure
18TSM1500-050-150

ความดันเริ่มต้นหากไม่ระบุ จะเท่ากับ
Charging Pressure if not mention is **150Bar**

S	H	C	Force (Yellow)		Gas Vol. (cm3)	Weight (kg)
			Start (N)	End (N)		
010	114	104	15,150	19,000	49.9	2.00
013	120	107		19,500	59.2	2.95
015	124	109		19,700	65.4	3.02
020	134	114		20,200	81.0	3.13
025	144	119		20,500	96.6	3.20
030	154	124		20,800	112.2	3.32
035	164	129		20,900	127.7	3.38
038	170	132		21,000	137.1	3.47
040	174	134		21,100	143.3	3.49
045	184	139		21,200	158.9	3.58
050	194	144		21,300	174.5	3.65
060	214	154		21,500	205.6	3.83
063	220	157		21,500	215.0	3.88
070	234	164		21,600	236.8	4.05
075	244	169		21,600	252.4	4.17
080	254	174		21,700	267.9	4.24
090	274	184		21,800	299.1	4.34
100	294	194		21,800	330.3	4.60
125	344	219		21,900	408.2	5.06
150	394	244		22,000	486.0	5.54
160	414	254		22,000	517.2	5.83
175	444	269		22,100	563.9	6.11
200	494	294		22,100	641.8	6.46

Charging Pressure

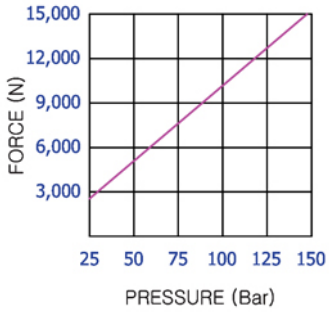

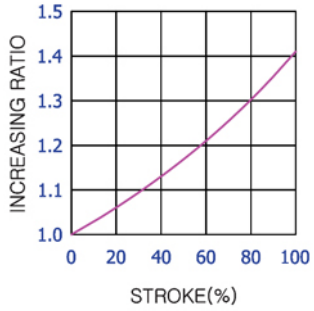

ORDER EXAMPLE Model
18SP1500

รายละเอียดโปรดดูหน้า Mounting ด้านหลังหมวดหมู่นี้
Mounting specification please see at the back of this category

Mounting Model: 18MD



Mounting Model: 18MS



Mounting Model: 18MT



Mounting Model: 18MR



Mounting Model: 18MK



Mounting Model: 18SP1500



Mounting Model: 18SB1500



Mounting Model: 18ST1500



Mounting Model: 18SR1500



Mounting Model: 18SC1500



แก๊สสปริง

TSM Gas Spring

Model: 18TSM3000

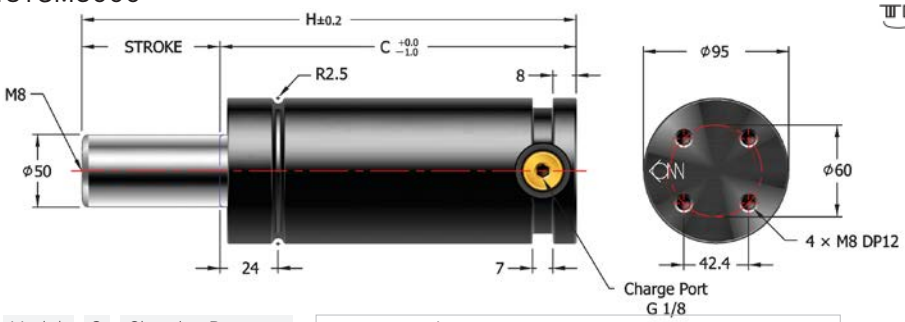

ORDER EXAMPLE | Model - S - Charging Pressure | 18TSM3000-050-150

ความดันเริ่มต้นหากไม่ระบุ จะเท่ากับ Charging Pressure if not mention is **150Bar**

S	H	C	Force (Yellow)		Gas Vol. (cm3)	Weight (kg)
			Start (N)	End (N)		
010	114	104		40,800	70.3	4.79
013	120	107		41,900	85.4	4.96
015	124	109		42,500	95.5	4.96
020	134	114		43,600	120.6	5.09
025	144	119		44,300	145.7	5.29
030	154	124		44,800	170.8	5.38
035	164	129		45,200	195.9	5.53
038	170	132		45,400	211.0	5.62
040	174	134		45,600	221.1	5.68
045	184	139		45,800	246.2	5.83
050	194	144		46,000	271.3	5.98
060	214	154	29,400	46,400	321.5	6.27
063	220	157		46,400	336.6	6.36
070	234	164		46,600	371.8	6.57
075	244	169		46,700	396.9	6.72
080	254	174		46,800	422.0	7.07
090	274	184		46,900	472.3	7.40
100	294	194		47,000	522.5	7.76
125	344	219		47,300	648.1	8.48
150	394	244		47,400	773.7	8.93
160	414	254		47,500	823.9	9.23
175	444	269		47,500	899.3	10.11
200	494	294		47,600	1024.9	10.41

Charging Pressure

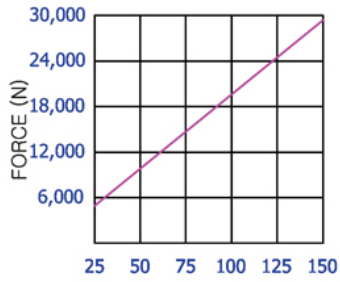

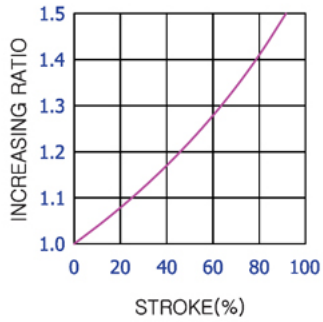

ORDER EXAMPLE | Model | 18SP3000

รายละเอียดโปรดดูหน้า Mounting ด้านหลังหมวดหมู่นี้
Mounting specification please see at the back of this category

Mounting Model: 18MD



Mounting Model: 18MS



Mounting Model: 18MT



Mounting Model: 18MR



Mounting Model: 18MK



Mounting Model: 18SP3000 ISO



Mounting Model: 18SB3000 ISO



Mounting Model: 18ST3000 ISO



Mounting Model: 18SR3000 ISO



Mounting Model: 18SC3000 ISO

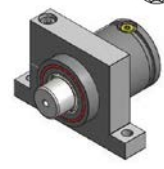

Gas Springs

SUN RISE technologies
Tel: +662-324-3184-(89) Fax: +662-324-3190 / +662-324-3103
Website: www.sunrisegr.com Email: sale@sunrisegr.com

TSM Gas Spring

Model: 18TSM5000

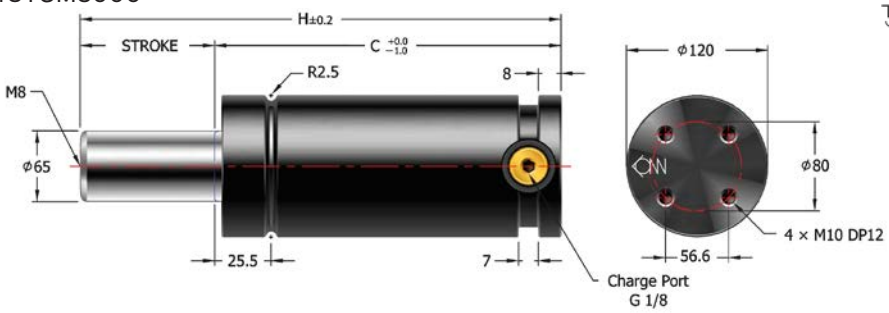

ORDER EXAMPLE Model - S - Charging Pressure
18TSM5000-050-150

ความดันเริ่มต้นหากไม่ระบุ จะเท่ากับ
Charging Pressure if not mention is **150Bar**

S	H	C	Force (Yellow)		Gas Vol. (cm3)	Weight (kg)
			Start (N)	End (N)		
010	117	107		67,400	125.6	7.78
013	123	110		69,800	149.2	7.92
015	127	112		71,000	164.9	8.01
020	137	117		73,500	204.1	8.24
025	147	122		75,200	243.4	8.48
030	157	127		76,500	282.6	8.71
035	167	132		77,600	321.9	8.95
038	173	135		78,100	345.4	9.09
040	177	137		78,400	361.1	9.18
045	187	142		79,100	400.4	9.41
050	197	147		79,600	439.6	9.65
060	217	157	49,650	80,500	518.1	10.11
063	223	160		80,700	541.7	10.25
070	237	167		81,200	596.6	10.58
075	247	172		81,400	635.9	10.81
080	257	177		81,700	675.1	11.05
090	277	187		82,100	753.6	11.51
100	297	197		82,400	832.1	11.98
125	347	222		83,100	1028.4	13.15
150	397	247		83,500	1224.6	14.32
160	417	257		83,600	1303.1	14.79
175	447	272		83,800	1420.9	15.49
200	497	297		84,100	1617.1	16.65

Charging Pressure

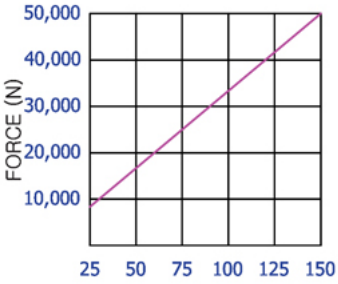

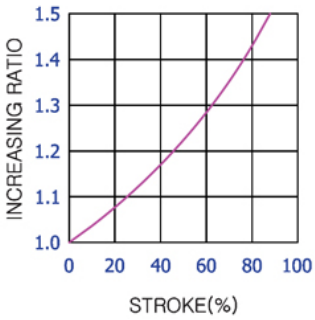

ORDER EXAMPLE Model
18SP5000

รายละเอียดโปรดดูหน้า Mounting ด้านหลังหมวดหมู่นี้
Mounting specification please see at the back of this category

Mounting Model: 18MD



Mounting Model: 18MS



Mounting Model: 18MT



Mounting Model: 18MR



Mounting Model: 18MK



Mounting Model: 18SP5000 ISO



Mounting Model: 18SB5000 ISO



Mounting Model: 18ST5000 ISO



Mounting Model: 18SR5000 ISO



Mounting Model: 18SC5000 ISO



แก๊สสปริง

TSS Gas Spring

Model: 18TSS0750

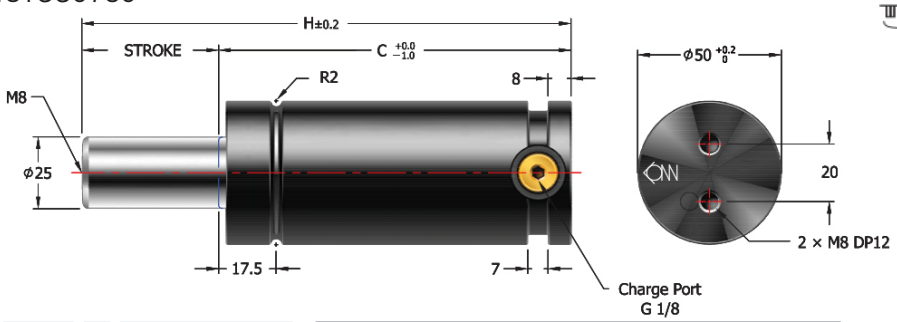

ORDER EXAMPLE Model - S - Charging Pressure
18TSS0750-050-150

ความดันเริ่มต้นหากไม่ระบุ จะเท่ากับ Charging Pressure if not mention is **150Bar**

S	H	C	Force (Yellow)		Gas Vol. (cm3)	Weight (kg)
			Start (N)	End (N)		
010	90	80		9,500	21.4	1.00
012.7	95.4	82.7		9,800	24.7	1.00
015	100	85		10,000	27.6	1.02
020	110	90		10,300	33.9	1.06
025	120	95		10,600	40.2	1.12
030	130	100		10,800	46.5	1.16
035	140	105		10,900	52.8	1.20
038	146	108		11,000	56.5	1.24
040	150	110		11,000	59.0	1.26
045	160	115		11,100	65.3	1.30
050	170	120		11,200	71.6	1.36
060	190	130	7,350	11,300	84.2	1.45
063	196	133		11,300	87.9	1.48
070	210	140		11,400	96.7	1.52
075	220	145		11,400	103.0	1.60
080	230	150		11,500	109.3	1.64
090	250	160		11,500	121.8	1.74
100	270	170		11,600	134.4	1.82
125	320	195		11,700	165.8	2.04
150	370	220		11,700	197.2	2.30
160	390	230		11,700	209.8	2.37
175	420	245		11,800	228.6	2.53
200	470	270		11,800	260.0	2.76

Charging Pressure

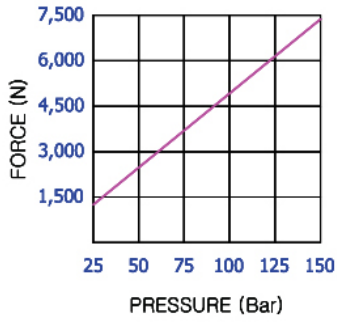

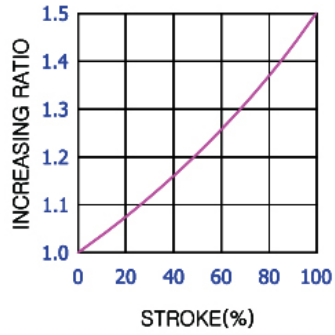

ORDER EXAMPLE Model
18SP0750

รายละเอียดโปรดดูหน้า Mounting ด้านหลังหมวดหมู่นี้
Mounting specification please see at the back of this category

Mounting Model: 18MD



Mounting Model: 18MS



Mounting Model: 18MT



Mounting Model: 18MR



Mounting Model: 18MK



Mounting Model: 18SP0750 ISO



Mounting Model: 18SB0750 ISO



Mounting Model: 18ST0750 ISO



Mounting Model: 18SR0750 ISO



Mounting Model: 18SC0750 ISO

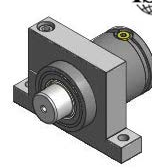

Gas Springs

SUN RISE technologies
Tel: +662-324-3184-(89) Fax: +662-324-3190 / +662-324-3103
Website: www.sunrisegr.com Email: sale@sunrisegr.com

TSS Gas Spring

Model: 18TSS1500

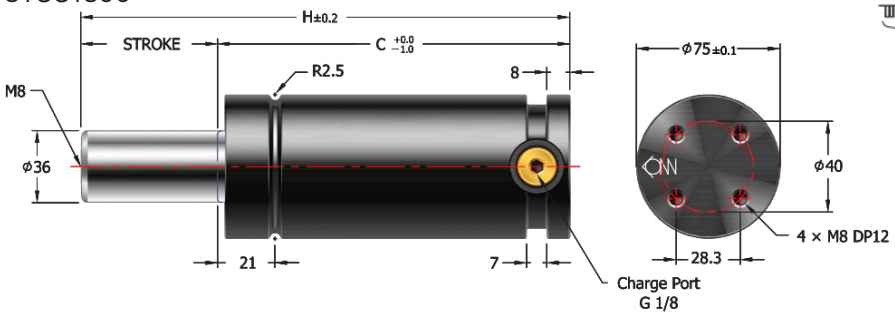

ORDER EXAMPLE Model - S - Charging Pressure
18TSS1500-050-150

ความดันเริ่มต้นหากไม่ระบุ จะเท่ากับ
Charging Pressure if not mention is **150Bar**

S	H	C	Force (Yellow)		Gas Vol. (cm3)	Weight (kg)
			Start (N)	End (N)		
010	122	112		17,800	68.5	3.06
013	127.4	114.4		18,300	76.0	3.09
015	132	117		18,500	84.1	3.13
020	142	122		19,000	99.7	3.24
025	152	127		19,400	115.3	3.33
030	162	132		19,700	130.9	3.42
035	172	137		20,000	146.4	3.50
038	178	140		20,100	155.8	3.59
040	182	142		20,200	162.0	3.62
045	192	147		20,400	177.6	3.70
050	202	152		20,500	193.2	3.80
060	222	162		20,800	224.3	3.99
063	228	165	15,150	20,800	233.7	4.06
070	242	172		20,900	255.5	4.16
075	252	177		21,000	271.1	4.28
080	262	182		21,100	286.6	4.34
090	282	192		21,200	317.8	4.56
100	302	202		21,300	349.0	4.73
125	352	227		21,500	426.8	5.20
150	402	252		21,600	504.7	5.62
160	422	262		21,700	535.9	5.80
175	452	277		21,700	582.6	6.16
200	502	302		21,800	660.5	6.50
250	602	352		21,900	816.3	7.39
300	702	402		22,000	972.1	8.27

Charging Pressure

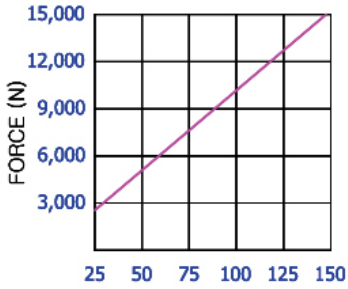

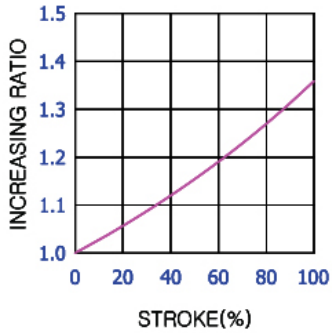

ORDER EXAMPLE Model
18SP1500

รายละเอียดโปรดดูหน้า Mounting ด้านหลังหมวดหมู่นี้
Mounting specification please see at the back of this category

Mounting Model: 18MD



Mounting Model: 18MS



Mounting Model: 18MT



Mounting Model: 18MR



Mounting Model: 18MK



Mounting Model: 18SP1500 ISO



Mounting Model: 18SB1500 ISO



Mounting Model: 18ST1500 ISO



Mounting Model: 18SR1500 ISO



Mounting Model: 18SC1500 ISO

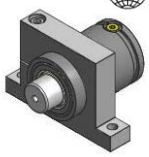

แก๊สสปริง

TSS Gas Spring

Model: 18TSS3000

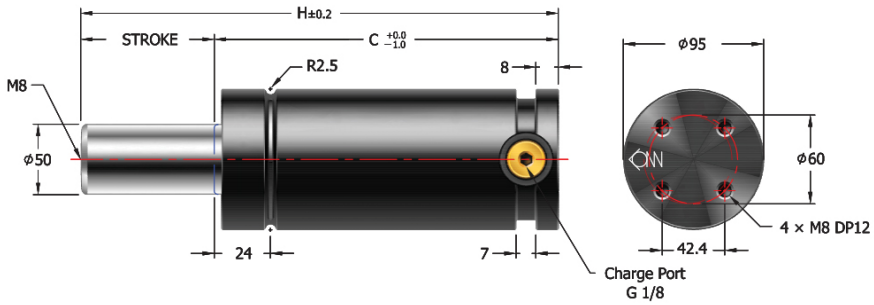

ORDER EXAMPLE Model - S - Charging Pressure
18TSS3000-050-150

ความดันเริ่มต้นหากไม่ระบุ จะเท่ากับ Charging Pressure if not mention is **150Bar**

S	H	C	Force (Yellow)		Gas Vol. (cm3)	Weight (kg)
			Start (N)	End (N)		
010	122	112		35,700	110.5	5.07
013	127.5	114.5		37,100	123.1	5.08
015	132	117		37,500	135.6	5.18
020	142	122		38,900	160.8	5.38
025	152	127		39,900	185.9	5.54
030	162	132		40,800	211.0	5.69
035	172	137		41,400	236.1	5.85
038	178	140		41,800	251.2	5.90
040	182	142		42,000	261.2	5.93
045	192	147		42,500	286.4	6.16
050	202	152		42,900	311.5	6.22
060	222	162		43,600	361.7	6.52
063	228	165	29,400	43,700	376.8	6.70
070	242	172		44,100	412.0	6.94
075	252	177		44,300	437.1	7.10
080	262	182		44,500	462.2	7.26
090	282	192		44,800	512.4	7.51
100	302	202		45,100	562.7	7.86
125	352	227		45,600	688.3	8.66
150	402	252		46,000	813.9	9.45
160	422	262		46,100	864.1	9.76
175	452	277		46,300	939.5	10.23
200	502	302		46,500	1065.1	11.01
250	602	352		46,800	1316.3	12.53
300	702	402		47,000	1567.5	14.14

Charging Pressure

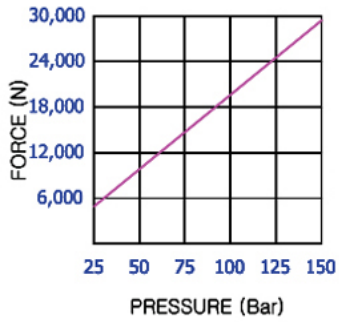

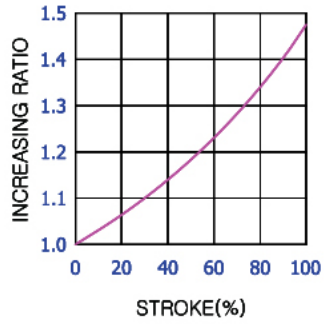

ORDER EXAMPLE Model
18SP3000

รายละเอียดโปรดดูหน้า Mounting ด้านหลังหมวดหมู่นี้
Mounting specification please see at the back of this category

Mounting Model: 18MD



Mounting Model: 18MS



Mounting Model: 18MT



Mounting Model: 18MR



Mounting Model: 18MK



Mounting Model: 18SP3000 ISO



Mounting Model: 18SB3000 ISO



Mounting Model: 18ST3000 ISO



Mounting Model: 18SR3000 ISO



Mounting Model: 18SC3000 ISO

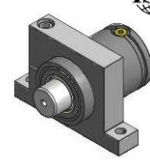

Gas Springs

SUN RISE technologies
Tel: +662-324-3184-(89) Fax: +662-324-3190 / +662-324-3103
Website: www.sunrisegr.com Email: sale@sunrisegr.com

TSS Gas Spring

Model: 18TSS5000

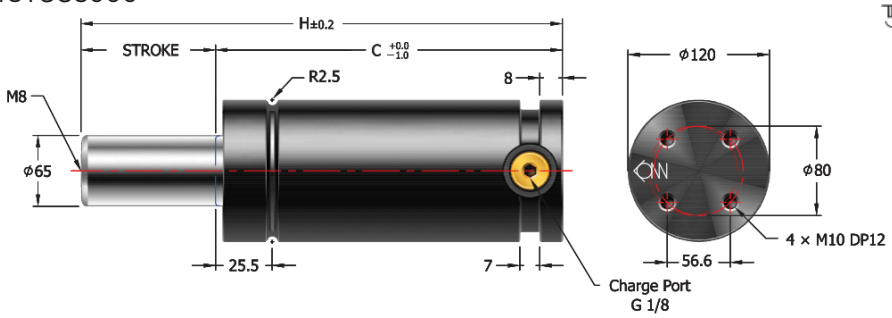

ORDER EXAMPLE Model - S - Charging Pressure
18TSS5000-050-150

ความดันเริ่มต้นหากไม่ระบุ จะเท่ากับ Charging Pressure if not mention is **150Bar**

S	H	C	Force (Yellow)		Gas Vol. (cm3)	Weight (kg)
			Start (N)	End (N)		
010	121.5	111.5	49,650	65,400	137.4	8.22
013	127.5	114.5		67,800	160.9	8.37
015	132	117		68,500	180.6	8.47
020	142	122		71,000	219.8	8.72
025	152	127		73,000	259.1	9.00
030	162	132		74,400	298.3	9.21
035	172	137		75,600	337.6	9.68
038	178	140		76,200	361.1	9.71
040	182	142		76,500	376.8	9.71
045	192	147		77,300	416.1	9.95
050	202	152		78,000	455.3	10.34
060	222	162		79,100	533.8	10.69
063	228	165		79,300	557.4	10.84
070	242	172		79,900	612.3	11.19
075	252	177		80,200	651.6	11.44
080	262	182		80,500	690.8	11.97
090	282	192		81,000	769.3	12.18
100	302	202		81,400	847.8	12.67
125	352	227		82,200	1044.1	13.91
150	402	252		82,800	1240.3	15.14
160	422	262		83,000	1318.8	15.63
175	452	277		83,200	1436.6	16.38
200	502	302		83,500	1632.8	17.61
250	602	352		84,000	2025.3	20.08
300	702	402		84,300	2417.8	22.55

Charging Pressure

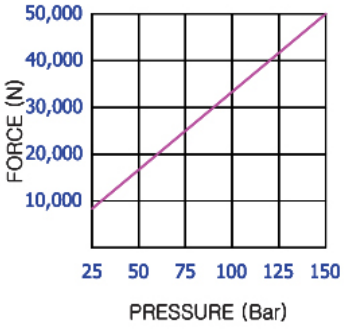

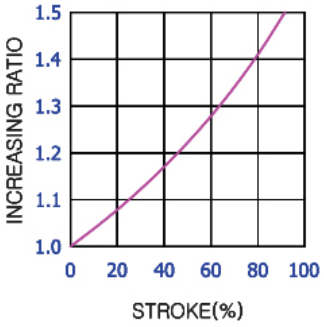

ORDER EXAMPLE Model
18SP5000

รายละเอียดโปรดดูหน้า Mounting ด้านหลังหมวดหมู่นี้
Mounting specification please see at the back of this category

Mounting Model: 18MD



Mounting Model: 18MS



Mounting Model: 18MT



Mounting Model: 18MR



Mounting Model: 18MK



Mounting Model: 18SP5000 ISO



Mounting Model: 18SB5000 ISO



Mounting Model: 18ST5000 ISO



Mounting Model: 18SR5000 ISO



Mounting Model: C5000 ISO

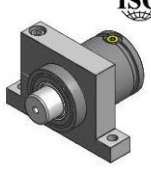

แก๊สสปริง

TSL Gas Spring

Model: 18TSL0500

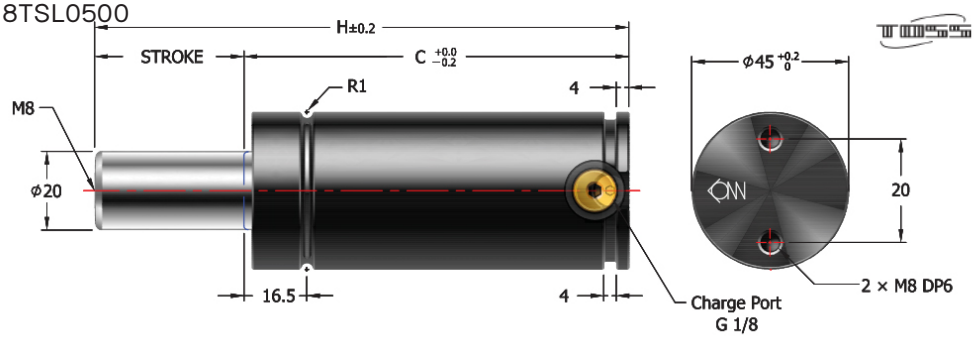

ORDER EXAMPLE Model - S - Charging Pressure
18TSL0500-050-150

ความดันเริ่มต้นหากไม่ระบุ จะเท่ากับ Charging Pressure if not mention is **150Bar**

S	H	C	Force (Yellow)		Gas Vol. (cm3)	Weight (kg)	ISO Standard
			Start (N)	End (N)			
010	105	95	4,650	5,100	33.9	0.89	
015	115	100		5,300	39.2	0.94	
020	125	105		5,400	44.6	0.98	
025	135	110		5,500	50.0	0.98	ISO
030	145	115		5,600	55.3	1.10	
035	155	120		5,700	60.7	1.13	
038	161	123		5,700	63.9	1.16	
040	165	125		5,700	66.1	1.16	
045	175	130		5,800	71.5	1.19	
050	185	135		5,800	76.8	1.21	ISO
060	205	145		5,900	87.6	1.23	
063	211	148		5,900	90.8	1.25	
070	225	155		6,000	98.3	1.31	
080	245	165		6,000	109.1	1.38	ISO
090	265	175		6,100	119.8	1.45	
100	285	185		6,100	130.6	1.51	
110	305	195		6,100	141.3	1.58	
120	325	205		6,200	152.1	1.64	
125	335	210		6,200	157.4	1.67	
160	405	245		6,200	195.1	1.89	

Charging Pressure

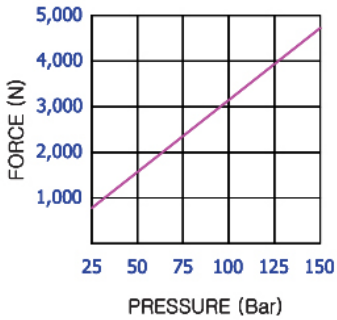

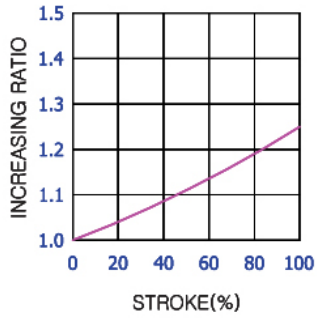

ORDER EXAMPLE Model
18SP0500

รายละเอียดโปรดดูหน้า Mounting ด้านหลังหมวดหมู่นี้
Mounting specification please see at the back of this category

Mounting Model:
18SP0500

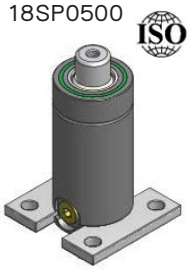

Mounting Model:
18SR0500



Mounting Model:
18ST0500

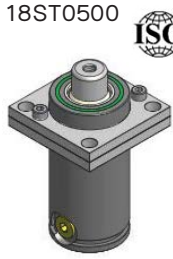

Mounting Model:
18SB0500

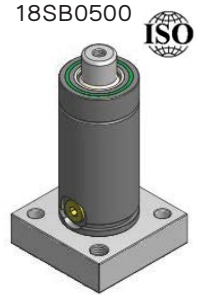

Mounting Model:
18SC0500



Gas Springs

SUN RISE technologies
Tel: +662-324-3184-(89) Fax: +662-324-3190 / +662-324-3103
Website: www.sunrisegr.com Email: sale@sunrisegr.com

TSL Gas Spring

Model: 18TSL0750

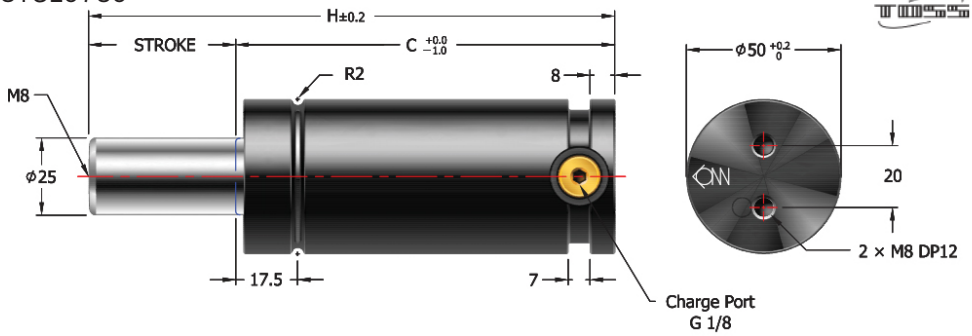

ORDER EXAMPLE Model - S - Charging Pressure
18TSL0750-050-150

ความดันเริ่มต้นหากไม่ระบุ จะเท่ากับ
Charging Pressure if not mention is **150Bar**

S	H	C	Force (Yellow)		Gas Vol. (cm3)	Weight (kg)	ISO Standard
			Start (N)	End (N)			
010	115	105		8,400	40.2	1.32	
012.7	120.4	107.7		8,600	43.6	1.34	
015	125	110		8,700	46.5	1.35	
020	135	115		9,000	52.8	1.40	
025	145	120		9,300	59.0	1.44	ISO
030	155	125		9,500	65.3	1.50	
035	165	130		9,700	71.6	1.54	
038	171	133		9,800	75.4	1.58	
040	175	135		9,800	77.9	1.59	
045	185	140		10,000	84.2	1.64	
050	195	145		10,100	90.4	1.68	ISO
060	215	155		10,300	103.0	1.78	
063	222	158	7,350	10,300	106.8	1.82	
070	235	165		10,500	115.6	1.87	
075	245	170		10,500	121.8	1.91	
080	255	175		10,600	128.1	1.98	ISO
090	275	185		10,700	140.7	2.06	
100	295	195		10,800	153.2	2.14	ISO
125	345	220		11,000	184.6	2.30	ISO
150	395	245		11,100	216.0	2.61	
160	415	255		11,200	228.6	2.72	ISO
175	445	270		11,200	247.4	2.84	
200	495	295		11,300	278.8	3.08	
250	595	345		11,300	341.6	3.60	
300	695	395		11,300	404.4	4.07	

Charging Pressure

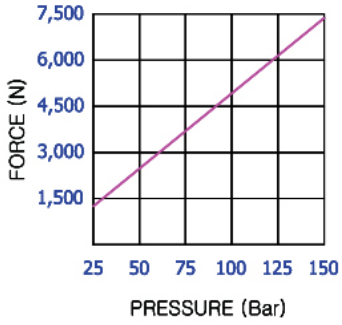

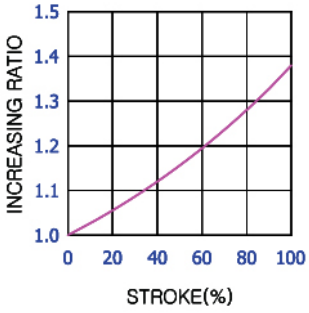

ORDER EXAMPLE Model
18SP0750

รายละเอียดโปรดดูหน้า Mounting ด้านหลังหมวดหมู่นี้
Mounting specification please see at the back of this category

Mounting Model: 18MD



Mounting Model: 18MS



Mounting Model: 18MT



Mounting Model: 18MR



Mounting Model: 18MK



Mounting Model: 18SP0750 ISO



Mounting Model: 18SB0750 ISO



Mounting Model: 18ST0750 ISO



Mounting Model: 18SR0750 ISO



Mounting Model: 18SC0750 ISO

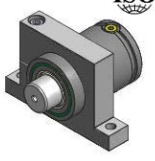

แก๊สสปริง

TSL Gas Spring

Model: 18TSL1500

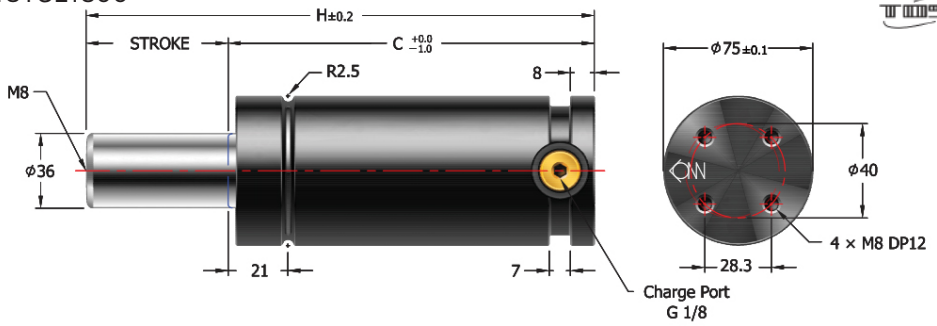

ORDER EXAMPLE Model - S - Charging Pressure
18TSL1500-050-150

ความดันเริ่มต้นหากไม่ระบุ จะเท่ากับ
Charging Pressure if not mention is **150Bar**

S	H	C	Force (Yellow)		Gas Vol. (cm3)	Weight (kg)	ISO Standard
			Start (N)	End (N)			
010	130	120		18,500	56.1	3.40	
013	135.4	122.4		19,100	63.6	3.45	
015	140	125		19,200	71.7	3.48	
020	150	130		19,700	87.2	3.58	
025	160	135		20,100	102.8	3.66	ISO
030	170	140		20,400	118.4	3.78	
035	180	145		20,600	134.0	3.86	
038	186	148		20,700	143.3	3.92	
040	190	150		20,800	149.6	4.00	
045	200	155		20,900	165.1	4.04	
050	210	160		21,000	180.7	4.16	ISO
060	230	170		21,200	211.9	4.36	
063	237	174	15,150	21,100	224.3	4.40	
070	250	180		21,400	243.0	4.47	
075	260	185		21,400	258.6	4.60	
080	270	190		21,500	274.2	4.67	ISO
090	290	200		21,600	305.3	4.85	
100	310	210		21,600	336.5	5.03	ISO
125	360	235		21,800	414.4	5.47	ISO
150	410	260		21,900	492.3	5.92	
160	430	270		21,900	523.4	6.22	ISO
175	460	285		22,000	570.2	6.37	
200	510	310		22,000	648.1	6.82	
250	610	360		22,100	803.8	7.90	
300	710	410		22,100	959.6	8.68	

Charging Pressure

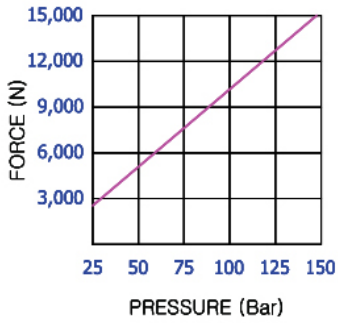

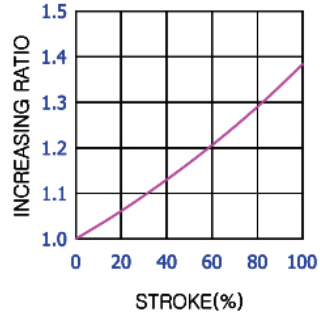

ORDER EXAMPLE Model
18SP1500

รายละเอียดโปรดดูหน้า Mounting ด้านหลังหมวดหมู่นี้
Mounting specification please see at the back of this category

Mounting Model: 18MD



Mounting Model: 18MS



Mounting Model: 18MT



Mounting Model: 18MR



Mounting Model: 18MK



Mounting Model: 18SP1500 ISO



Mounting Model: 18SB1500 ISO



Mounting Model: 18ST1500 ISO



Mounting Model: 18SR1500 ISO

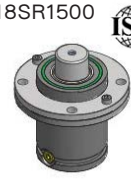

Mounting Model: 18SC1500 ISO

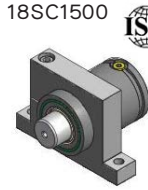

Gas Springs

SUN RISE technologies
Tel: +662-324-3184-(89) Fax: +662-324-3190 / +662-324-3103
Website: www.sunrisegr.com Email: sale@sunrisegr.com

TSL Gas Spring

Model: 18TSL3000

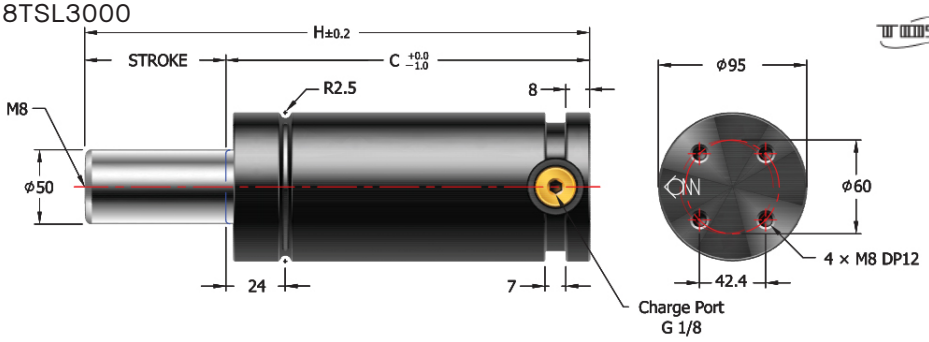

ORDER EXAMPLE Model - S - Charging Pressure
18TSL3000-050-150

ความดันเริ่มต้นหากไม่ระบุ จะเท่ากับ Charging Pressure if not mention is **150Bar**

S	H	C	Force (Yellow)		Gas Vol. (cm3)	Weight (kg)	ISO Standard
			Start (N)	End (N)			
010	140	130		37,000	95.5	5.74	
013	145.5	132.5		38,500	108.0	5.84	
015	150	135		38,900	120.6	5.92	
020	160	140		40,200	145.7	6.09	
025	170	145		41,200	170.8	6.48	ISO
030	180	150		42,000	195.9	6.55	
035	190	155		42,600	221.1	6.62	
038	196	158		42,900	236.1	6.73	
040	200	160		43,100	246.2	6.80	
045	210	165		43,600	271.3	6.98	
050	220	170		43,900	296.4	7.15	ISO
060	240	180		44,500	346.7	7.51	
063	247	184	29,400	44,300	366.8	7.68	
070	260	190		44,900	396.9	7.86	
075	270	195		45,100	422.0	8.04	
080	280	200		45,300	447.1	8.27	ISO
090	300	210		45,600	497.4	8.58	
100	320	220		45,800	547.6	8.85	ISO
125	370	245		46,200	673.2	9.65	ISO
150	420	270		46,500	798.8	10.69	
160	440	280		46,600	849.1	11.05	ISO
175	470	295		46,700	924.4	11.58	
200	520	320		46,900	1050	12.46	
250	620	370		47,200	1301.2	14.23	
300	720	420		47,300	1552.4	16.00	

Charging Pressure

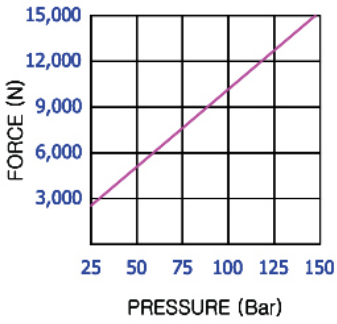

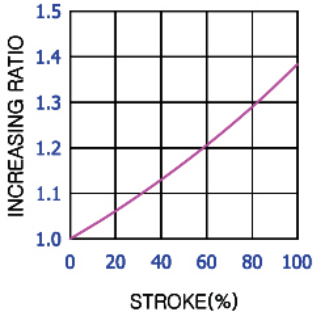

ORDER EXAMPLE Model
18SP3000

รายละเอียดโปรดดูหน้า Mounting ด้านหลังหมวดหมู่นี้
Mounting specification please see at the back of this category

Mounting Model: 18MD



Mounting Model: 18MS



Mounting Model: 18MT



Mounting Model: 18MR



Mounting Model: 18MK



Mounting Model: 18SP3000 ISO



Mounting Model: 18SB3000 ISO



Mounting Model: 18ST3000 ISO



Mounting Model: 18SR3000 ISO



Mounting Model: 18SC3000 ISO



แก๊สสปริง

TSL Gas Spring

Model: 18TSL5000

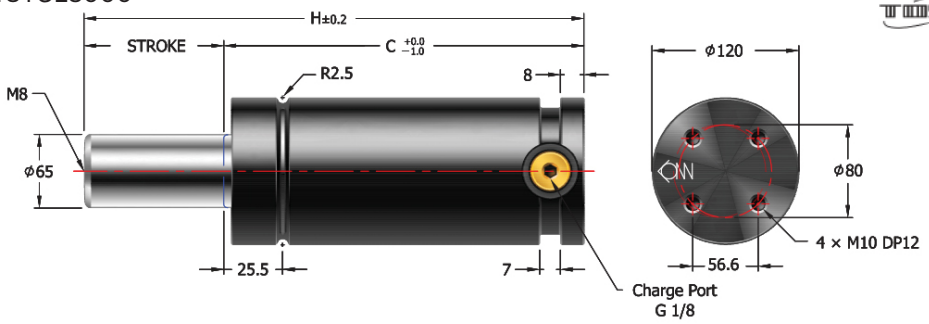

ORDER EXAMPLE | Model - S - Charging Pressure | 18TSL5000-050-150

ความดันเริ่มต้นหากไม่ระบุ จะเท่ากับ Charging Pressure if not mention is **150Bar**

S	H	C	Force (Yellow)		Gas Vol. (cm3)	Weight (kg)	ISO Standard
			Start (N)	End (N)			
010	159.5	149.5		63,300	153.1	10.32	
013	165.5	152.5		65,600	176.6	10.71	
015	170	155		66,500	196.3	11.10	
020	180	160		69,100	235.5	11.49	
025	190	165		71,000	274.8	11.88	ISO
030	200	170		72,600	314.0	12.27	
035	210	175		73,900	353.3	12.66	
038	216	178		74,500	376.8	13.00	
040	220	180		74,900	392.5	13.44	
045	230	185		75,800	431.8	13.83	
050	240	190		76,500	471.0	14.22	ISO
060	260	200		77,800	549.5	14.68	
063	266	203	49,650	78,100	573.1	15.07	
070	280	210		78,700	628.0	15.46	
075	290	215		79,100	667.3	15.85	
080	300	220		79,400	706.5	16.24	ISO
090	320	230		80,000	785.0	16.94	
100	340	240		80,500	863.5	17.66	ISO
125	390	265		81,400	1059.8	18.05	ISO
150	440	290		82,100	1256.0	18.44	
160	460	300		82,300	1334.5	18.83	ISO
175	490	315		82,600	1452.3	19.22	
200	540	340		83,000	1648.5	19.61	
250	640	390		83,500	2041	20.31	
300	740	440		83,900	2433.5	21.01	

Charging Pressure

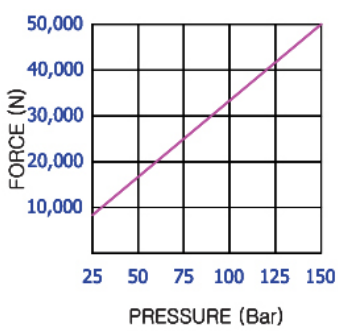

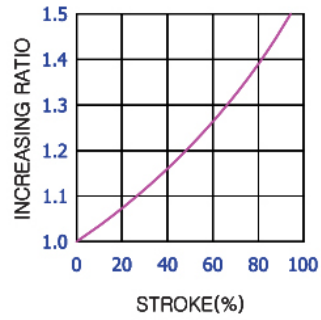

ORDER EXAMPLE | Model | 18SP5000

รายละเอียดโปรดดูหน้า Mounting ด้านหลังหมวดหมู่นี้
Mounting specification please see at the back of this category

Mounting Model: 18MD



Mounting Model: 18MS



Mounting Model: 18MT



Mounting Model: 18MR



Mounting Model: 18MK



Mounting Model: 18SP5000 ISO



Mounting Model: 18SB5000 ISO



Mounting Model: 18ST5000 ISO



Mounting Model: 18SR5000 ISO



Mounting Model: 18SC5000 ISO

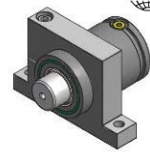

Gas Springs

SUN RISE technologies
Tel: +662-324-3184-(89) Fax: +662-324-3190 / +662-324-3103
Website: www.sunrisegr.com Email: sale@sunrisegr.com

TSL Gas Spring

Model: 18TSL7500

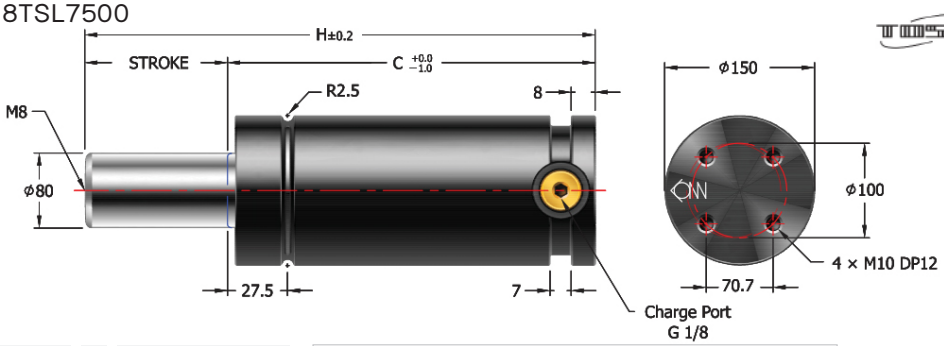

ORDER EXAMPLE	Model	-	S	-	Charging Pressure
	18TSL7500	-	050	-	150

ความดันเริ่มต้นหากไม่ระบุ จะเท่ากับ Charging Pressure if not mention is **150Bar**

S	H	C	Force (Yellow)		Gas Vol. (cm3)	Weight (kg)	ISO Standard
			Start (N)	End (N)			
015	185	170		96,400	343.4	16.80	
020	195	175		100,100	404.8	18.40	
025	205	180		103,000	466.1	21.20	ISO
030	215	185		105,400	527.4	22.45	
035	225	190		107,300	588.8	23.20	
038	231	193		108,300	625.5	24.20	
040	235	195		109,000	650.1	25.20	
045	245	200		110,300	711.4	26.90	
050	255	205		111,500	772.7	27.90	ISO
060	275	215		113,500	895.4	29.50	
063	282	219		113,200	944.5	30.50	
070	295	225	75,300	115,000	1018.0	31.80	
075	305	230		115,600	1079.4	33.20	
080	315	235		116,200	1140.7	34.40	ISO
090	335	245		117,200	1263.4	35.40	
100	355	255		118,100	1386.0	36.50	ISO
125	405	280		119,700	1692.7	37.40	ISO
150	455	305		120,800	1999.3	38.50	
160	475	315		121,200	2122.0	39.40	ISO
175	505	330		121,600	2305.9	40.40	
200	555	355		122,300	2612.6	41.70	
250	655	405		123,200	3255.9	42.60	
300	755	455		123,900	3839.1	43.70	

Charging Pressure

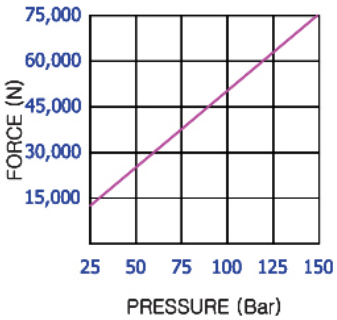

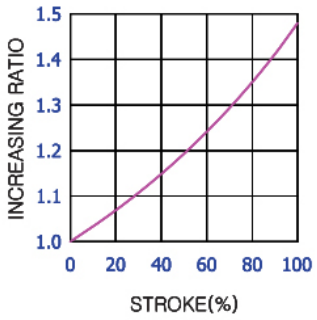

ORDER EXAMPLE	Model
	18SP7500

รายละเอียดโปรดดูหน้า Mounting ด้านหลังหมวดหมู่นี้
Mounting specification please see at the back of this category

Mounting Model:
18MS



Mounting Model:
18SB7500



Mounting Model:
18SR7500



Mounting Model:
18ST7500



Mounting Model:
18SP7500



Mounting Model:
18SC7500



แก๊สสปริง

TSL Gas Spring

Model: 18TSL10000

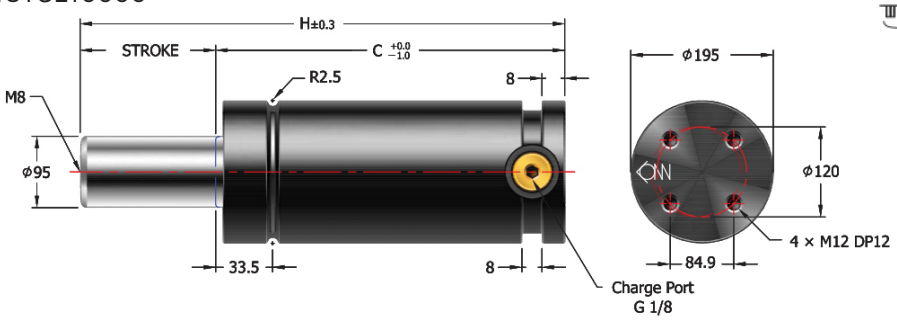

ORDER EXAMPLE: Model - S - Charging Pressure
18TSL10000-050-150

ความดันเริ่มต้นหากไม่ระบุ จะเท่ากับ Charging Pressure if not mention is 150Bar

S	H	C	Force (Yellow)		Gas Vol. (cm3)	Weight (kg)	ISO Standard
			Start (N)	End (N)			
020	200	180	106,200	137,600	619.8	36.20	
025	210	185		140,400	726.6	38.50	
030	220	190		142,500	833.5	40.20	
035	230	195		144,200	940.4	42.50	
038	236	198		145,100	1004.5	44.10	
040	240	200		145,600	1047.2	45.60	
045	250	205		146,700	1154.1	47.90	
050	260	210		147,700	1260.9	48.80	ISO
060	280	220		149,200	1474.6	50.90	
063	287	223		149,600	1538.8	51.70	
070	300	230		150,300	1688.4	53.20	
075	310	235		150,800	1795.2	55.45	
080	320	240		151,200	1902.1	57.00	ISO
090	340	250		152,000	2115.8	59.50	
100	360	260		152,600	2329.5	61.80	ISO
125	410	285		153,700	2863.8	64.50	ISO
150	460	310		154,500	3398.1	67.20	
160	480	320		154,700	3611.8	69.00	ISO
175	510	335		155,100	3932.4	72.30	
200	560	360		155,500	4466.7	74.50	ISO
250	660	410		156,100	5535.3	80.50	ISO
300	760	460		156,600	6603.8	86.50	ISO

Charging Pressure

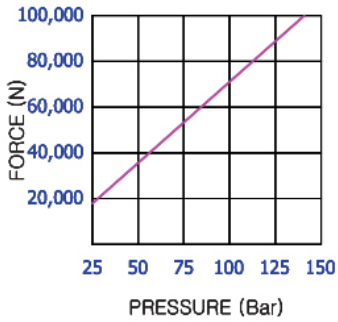

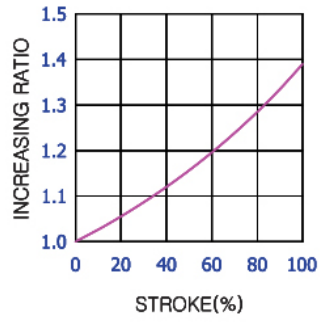

ORDER EXAMPLE: Model
18SP10000

รายละเอียดโปรดดูหน้า Mounting ด้านหลังหมวดหมู่นี้
Mounting specification please see at the back of this category

Mounting Model:
18MD



Mounting Model:
18SB10000



Mounting Model:
18SP10000



Mounting Model:
18ST10000



SUN RISE technologies
Tel: +662-324-3184-(89) Fax: +662-324-3190 / +662-324-3103
Website: www.sunrisegr.com Email: sale@sunrisegr.com

Control Panel

Model: 18PAN3

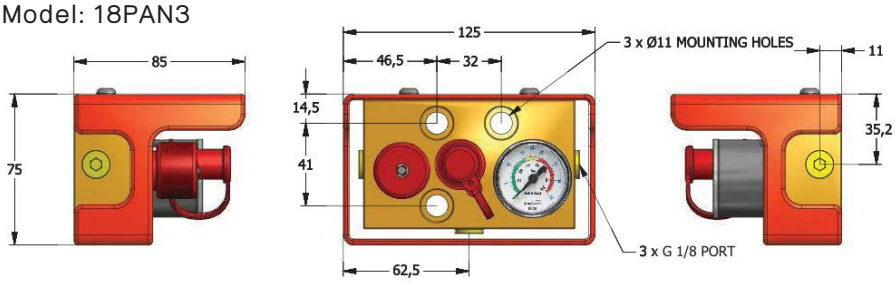

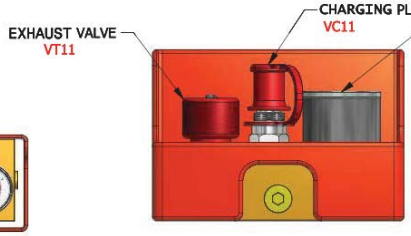

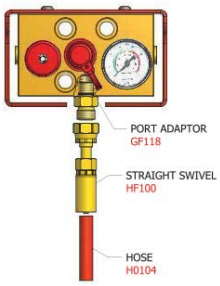

PAN3 + FITTING CONNECTION

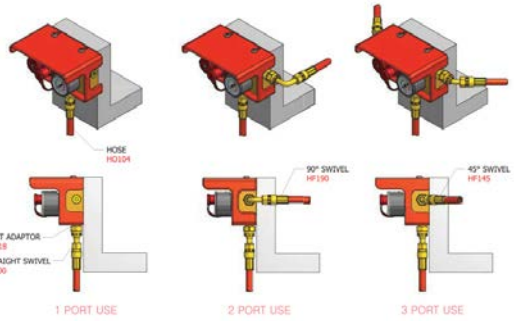

Model: 18PAN6

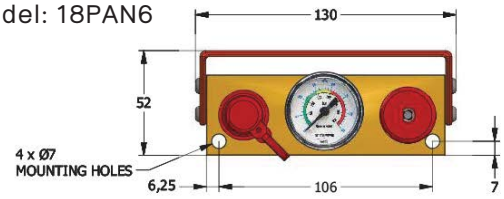

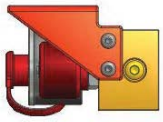

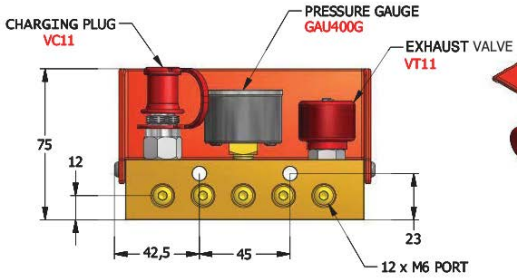

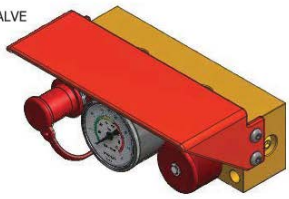

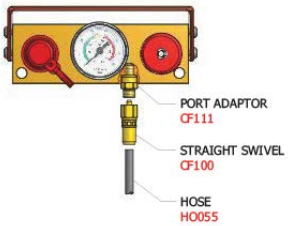

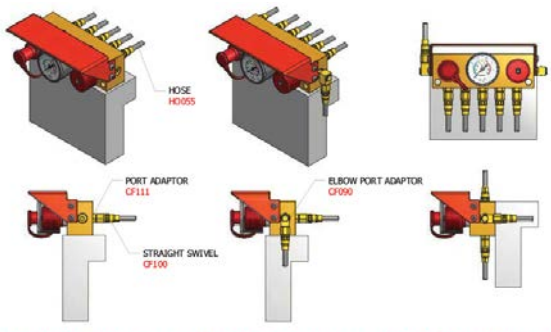

PAN3 + FITTING CONNECTION

Multi Panel

Model: 18PSS

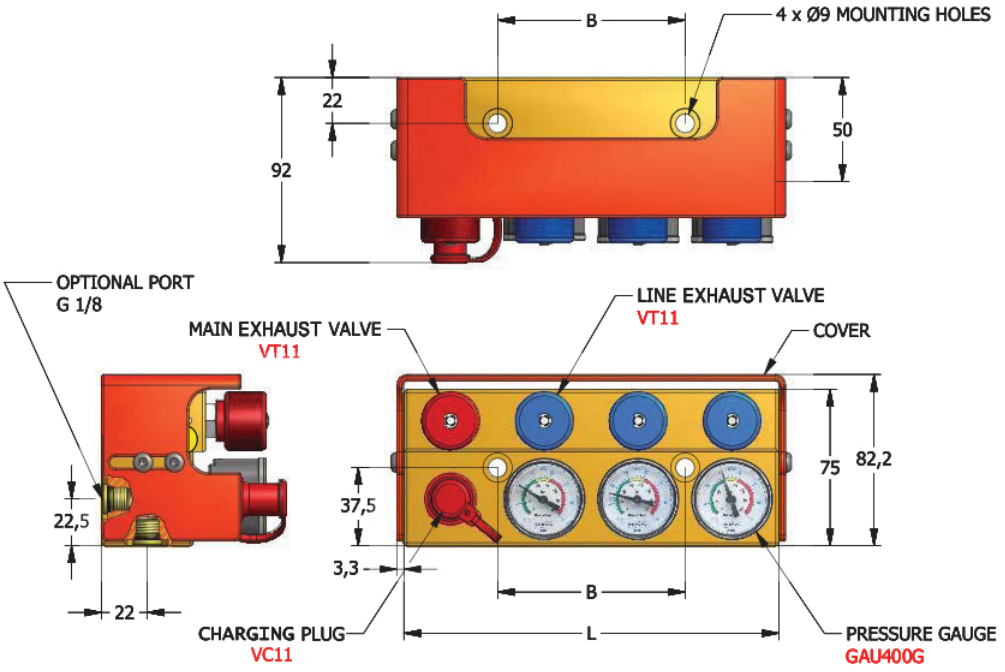

Order Code	L	B
18PSS-2	135	45
18PSS-3	180	90
18PSS-4	225	135
18PSS-5	270	180
18PSS-6	315	225
18PSS-7	360	270
18PSS-8	405	315

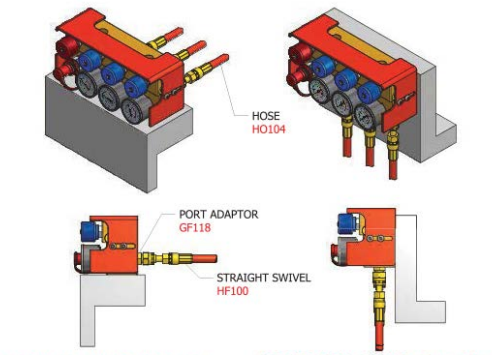

VERTICAL FIXING PORT USE HORIZONTAL FIXING PORT USE

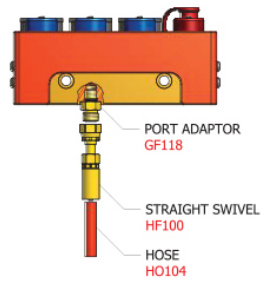

PSS-3 + FITTING CONNECTION

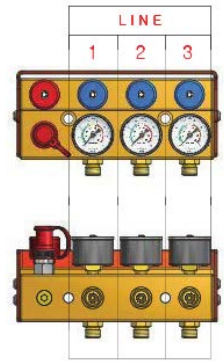

SUN RISE technologies
Tel: +662-324-3184-(89) Fax: +662-324-3190 / +662-324-3103
Website: www.sunrisegr.com Email: sale@sunrisegr.com

Distribution Block

Model: 18HB-10
Distribution 10 Port Block

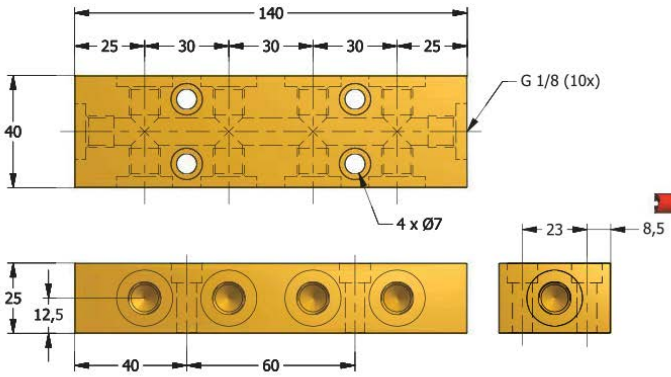

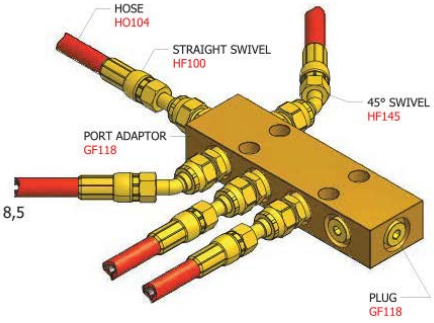

HB-10 USE EXAMPLE

Model: 18CB-4
Compact 4 Block

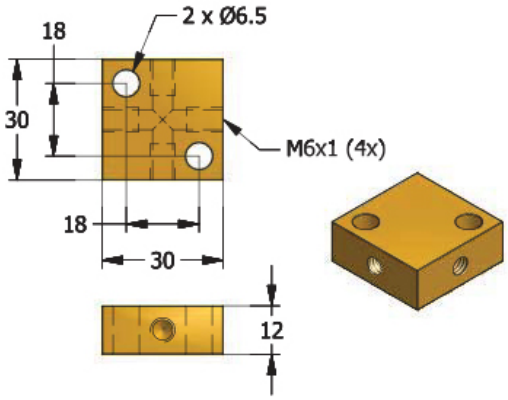

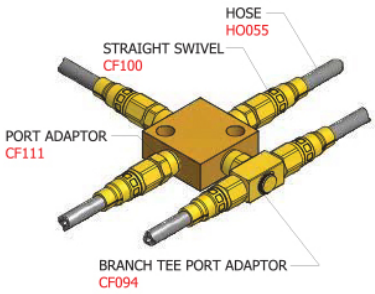

CB-4 USE EXAMPLE

Model: 18CB-12
Compact 12 Block

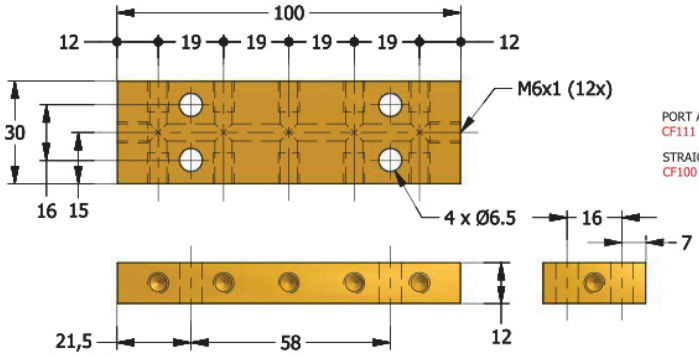

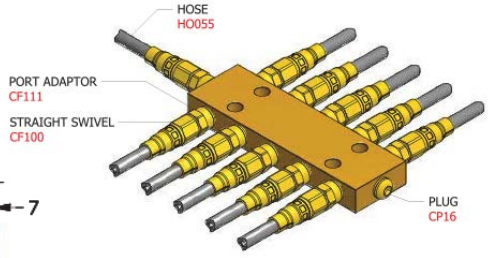

CB-12 USE EXAMPLE

แก๊สสปริง

Compact Fittings

ORDER EXAMPLE 18 - Model 18CP18

ใช้ในพื้นที่แคบ
Use in small area

Working Pressure: 200bar
Burst Pressure: 800bar
Hose Minimum Bend Radius: R15
Hose Outer Diameter: D5.5mm



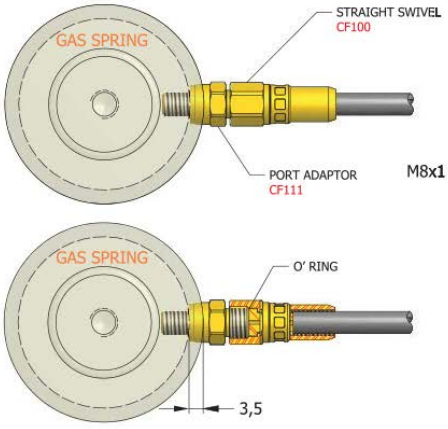



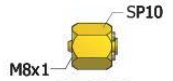

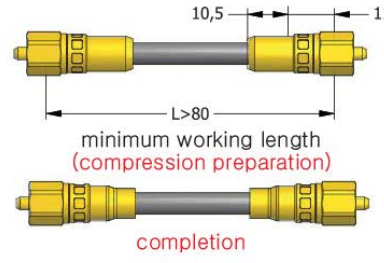

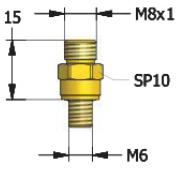

PORT ADAPTOR
CF111

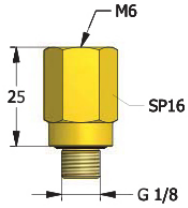

G 1/8 PORT ADAPTOR
CF118

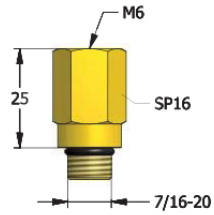

7/16 PORT ADAPTOR
CF716

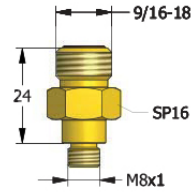

G 1/8 - M8 UNION
CF188

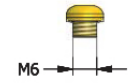

PLUG
CP16

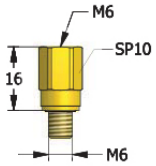

PORT ADAPTOR EXTENSION
CF110

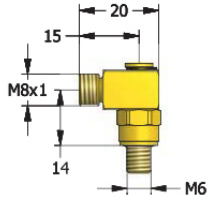

ELBOW PORT ADAPTOR
CF090

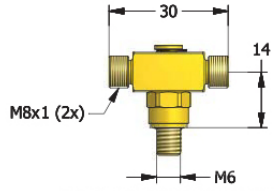

BRANCH TEE PORT ADAPTOR
CF094

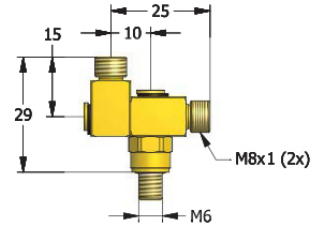

RUN TEE PORT ADAPTOR
CF093

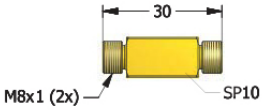

UNION
CTH10

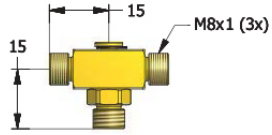

UNION TEE
CTH93

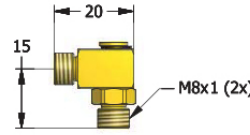

UNION ELBOW
CTH90

Gas Springs

SUN RISE technologies
Tel: +662-324-3184-(89) Fax: +662-324-3190 / +662-324-3103
Website: www.sunrisegr.com Email: sale@sunrisegr.com

GF Fittings

ORDER EXAMPLE 18 - Model 18GP111

รุ่นที่ใช้ทั่วไป
Common usage type

Working Pressure: 200bar
Burst Pressure: 700bar
Hose Minimum Bend Radius: R30
Hose Outer Diameter: D10.4mm

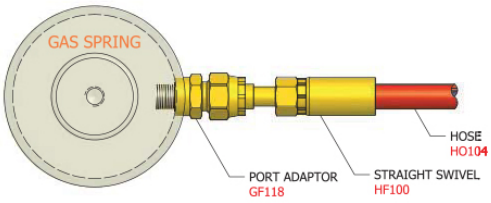

FITTING + HOSE USE EXAMPLE

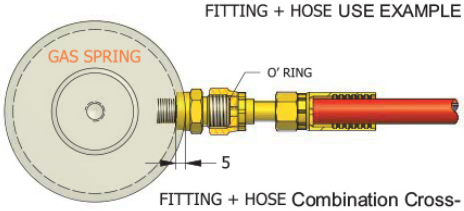

FITTING + HOSE Combination Cross- Section View

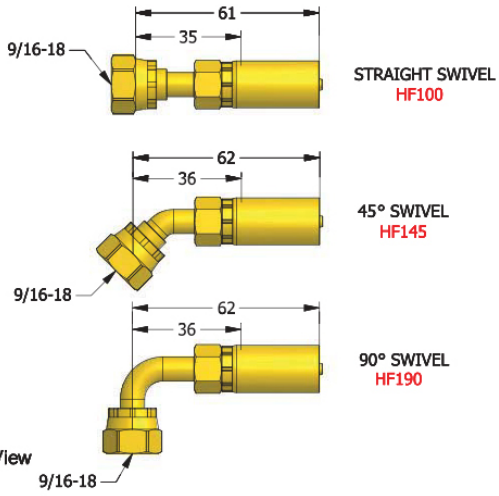

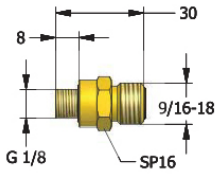

PORT ADAPTOR
GF118

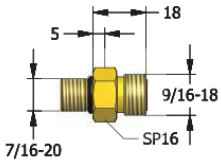

PORT ADAPTOR
GF111

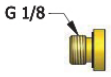

PLUG
GP118

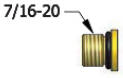

PLUG
GP716

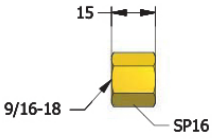

END PLUG
GP100

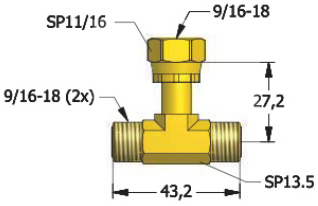

SWIVEL NUT BRANCH TEE
FS094

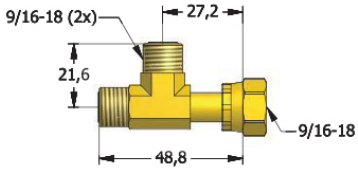

SWIVEL NUT RUN TEE
FS093

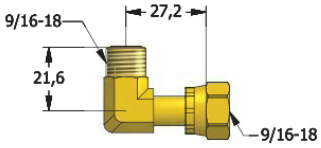

90° SWIVEL NUT ELBOW
FS090

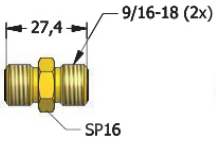

UNION
HTH10

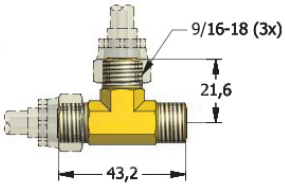

UNION TEE
HTH93

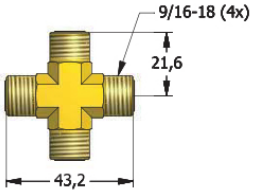

UNION CROSS
HTH94

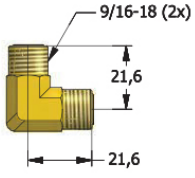

UNION ELBOW
HTH90

Mounting

Mounting Model: 18SB

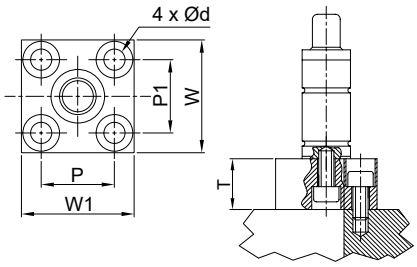

Mounting Model	W	W1	P	P1	d	T
18SB0500	70	70	50	50	9	20
18SB0750	75	75	56.5	56.5	9	20
18SB1500	100	100	73.5	73.5	11	20
18SB3000	120	120	92	92	13.5	20
18SB5000	140	140	109.5	109.5	13.5	20
18SB7500	190	190	138	138	17.5	25
18SB10000	210	210	170	170	17.5	25

Mounting Model: 18SC

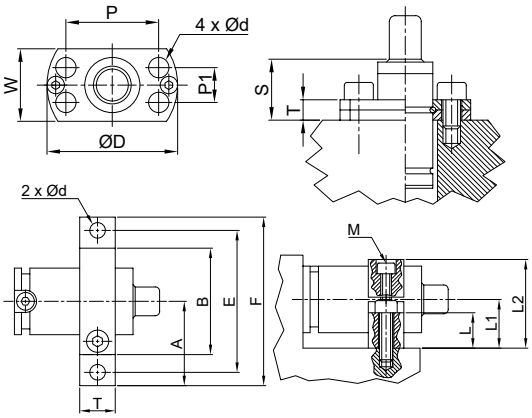

Mounting Model	D	W	P	P1	d	S	T
18SC0090	45	25	30	12	7	21.5	9
18SC0170	45	25	32	12	7	20.5	7

Mounting Model	A	B	E	F	d	T	M	L	L1	L2
18SC0500	54	66	82	100	9	20	M8	20	30	60
18SC0750	70	90	110	130	9	30	M8	20	40	80
18SC1500	85	115	137	160	11	30	M10	20	52.5	105
18SC3000	102.5	145	170	195	13	30	M12	20	62.5	125
18SC5000	115	165	195	220	13	30	M12	20	74	148
18SC7500	135	200	230	260	13	30	M12	20	100	200

Mounting Model: 18SG

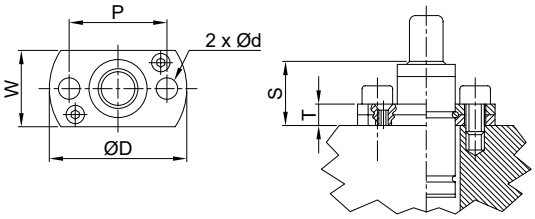

Mounting Model	D	W	P	d	S	T
18SG0050	34	21	24	6.6	17.5	9
18SG0070	37	24	27	6.6	21.5	9
18SG0090	45	25	32	7	20.5	7
18SG0150	50	30	34	7	21.5	9
18SG0170	45	25	32	7	20.5	7
18SG0300	75	50	50	9	-	12

Mounting Model: 18SP

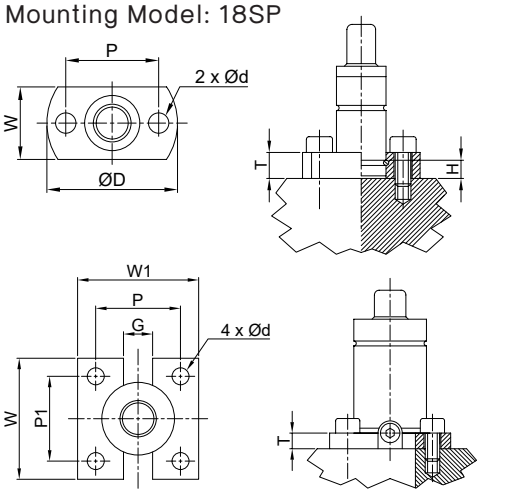

Mounting Model	D	W	P	d	T	H
18SP0090	45	25	32	7	10	7
18SP0170	45	25	32	7	10	7

Mounting Model	W	W1	P	P1	G	d	T
18SP0500	70	70	50	50	20	9	6.5
18SP0750	75	75	56.5	56.5	24	9	12
18SP0750M	75	75	56.5	56.5	24	9	6.5
18SP1500	100	100	73.5	73.5	24	11	12
18SP3000	120	120	92	92	24	13.5	12
18SP5000	140	140	109.5	109.5	24	13.5	12
18SP7500	190	190	138	138	24	17.5	12
18SP10000	210	210	170	170	24	17.5	13

SUN RISE technologies
Tel: +662-324-3184-(89) Fax: +662-324-3190 / +662-324-3103
Website: www.sunrisegr.com Email: sale@sunrisegr.com

Mounting

Mounting Model: 18SR

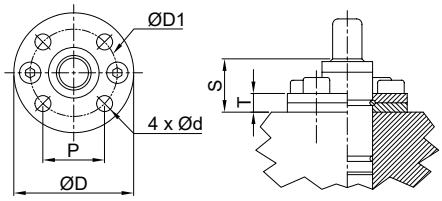

Mounting Model	D	D1	P	d	S	T
18SR0500	86	70.7	50	9	23	13
18SR0750	95	80	56.5	9	24	13
18SR1500	122	104	73.5	11	29	16
18SR3000	150	130	92	13.5	33	18
18SR5000	175	155	109.5	13.5	36	21
18SR7500	220	195	138	17.5	41	27

Mounting Model: 18ST

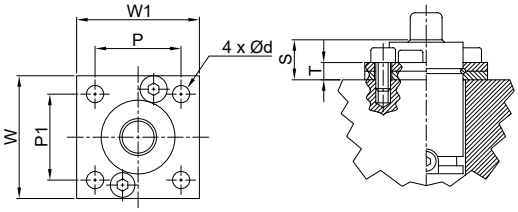

Mounting Model	W	W1	P	P1	d	S	T
18ST0500	64	64	50	50	9	23	13
18ST0750	70	70	56.5	56.5	9	24	13
18ST1500	90	90	73.5	73.5	11	29	16
18ST3000	110	110	92	92	13.5	33	18
18ST5000	130	130	109.5	109.5	13.5	36	21
18ST7500	162	162	138	138	17.5	41	27
18ST10000	210	210	170	170	17.5	47	27

Mounting Model: 18XB

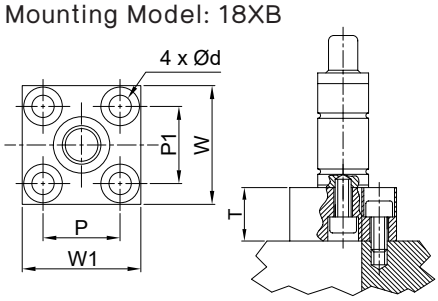

Mounting Model	W	W1	P	P1	d	T
18XB0150	40	40	28	28	7	20
18XB0320	40	40	28	28	7	20
18XB0750	70	70	50	50	9	20
18XB1000	75	75	56.5	56.5	9	20
18XB1500	100	100	73.5	73.5	11	20
18XB2400	100	100	73.5	73.5	11	20
18XB4200	120	120	92	92	13.5	20
18XB6600	140	140	109.5	109.5	13.5	20
18XB9500	190	190	138	138	17.5	25

Mounting Model: 18XC

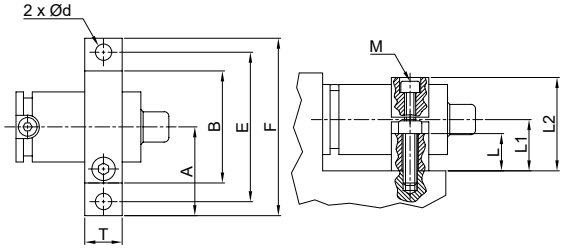

Mounting Model	A	B	E	F	d	T	M	L	L1	L2
18XC0300	53	59	77	95	9	20	M6	20	27.5	50.3
18XC0500	53	59	77	95	9	20	M6	20	27.5	50.3
18XC0750	54	66	82	100	9	20	M8	20	30	60
18XC1000	70	90	110	130	9	30	M8	20	40	80
18XC1500	85	102	123	146	11	30	M8	20	45	90
18XC2400	85	115	137	160	11	30	M10	20	52.5	105
18XC4200	102.5	145	170	195	13	30	M12	20	62.5	125
18XC6600	115	165	195	220	13	30	M12	20	74	148
18XC9500	135	200	230	260	13	30	M12	20	100	200

Mounting Model: 18XP

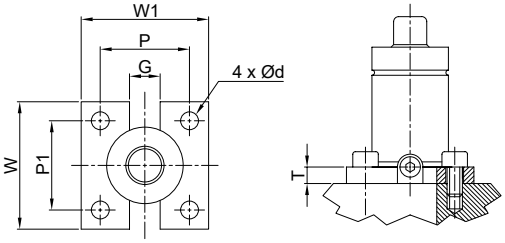

Mounting Model	W	W1	P	P1	G	d	T
18XP0150	40	40	28	28	5	7	5.5
18XP0300	55	55	40	40	12	7	6.5
18XP0350	50	50	35	35	12	7	6.5
18XP0500	55	55	40	40	12	7	6.5
18XP0750	70	70	50	50	20	9	6.5
18XP1000	75	75	56.5	56.5	24	9	12
18XP1500	85	85	60	60	24	11	12
18XP2400	100	100	73.5	73.5	24	11	12
18XP4200	120	120	92	92	24	13.5	12
18XP9500	190	190	138	138	24	17.5	12

แก๊สสปริง

Mounting

Mounting Model: 18XR

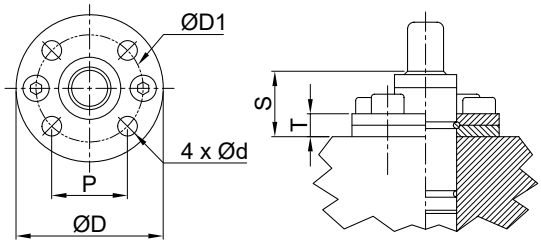

Mounting Model	D	D1	P	d	S	T
18XR0150	50	38	26.9	7	21.5	9
18XR0300	68	56.5	40	7	17	9
18XR0320	50	38	26.9	7	21.5	9
18XR0350	60	49.5	35	7	17	9
18XR0500	68	56.5	40	7	17	9
18XR0750	86	70.7	50	9	22	13
18XR1000	95	80	56.5	9	22	13
18XR1500	105	85	60.1	11	27	16
18XR2400	122	104	73.5	11	29	16
18XR4200	150	130	92	13.5	33	18
18XR6600	175	155	109.5	13.5	36	21
18XR9500	220	195	138	17.5	41	27

Mounting Model: 18XT

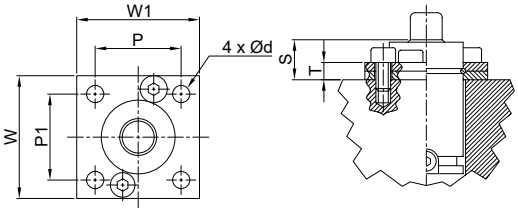

Mounting Model	W	W1	P	P1	d	S	T
18XT0300	52	52	40	40	7	17	9
18XT0500	52	52	40	40	7	17	9
18XT0750	64	64	50	50	9	22	13
18XT1000	70	70	56.5	56.5	9	22	13
18XT1500	90	90	73.5	73.5	11	27	16
18XT2400	90	90	73.5	73.5	11	29	16
18XT4200	110	110	92	92	13.5	33	18
18XT6600	130	130	109.5	109.5	13.5	36	21
18XT9500	162	162	138	138	17.5	41	27

Mounting Model: 18TB

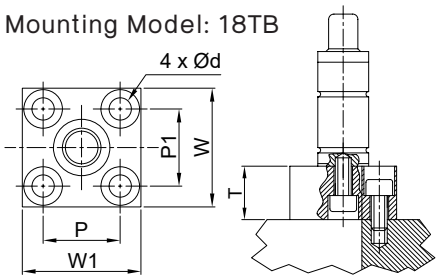

Mounting Model	W	W1	P	P1	d	T
18TB1000	75	75	56.5	56.5	9	20
18TB2400	100	100	73.5	73.5	11	20
18TB4200	120	120	92	92	13.5	20
18TB9500	190	190	138	138	17.5	25

Mounting Model: 18MD

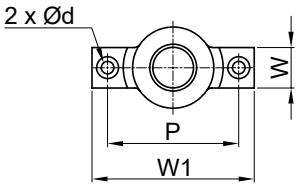

เชื่อมติดกับแก๊สสปริง
Welded

For Models:
18TSP
18TSX
18TST

Mounting Model	W	W1	P	d	T
18MD_1000	30	111	89	11	20
18MD_1500	30	122	102	11	20
18MD_2400	38	152	120	13	20
18MD_3000	38	178	146	13	20
18MD_4200	38	178	146	13	20
18MD_6600	38	197	165	13	20

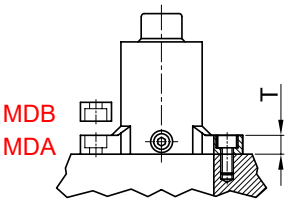

For Models:
18TSM
18TSS
18TSL

Mounting Model	W	W1	P	d	T
18MD_0750	30	111	89	11	20
18MD_1500	38	152	120	13	20
18MD_3000	38	178	146	13	20
18MD_5000	38	197	165	13	20

SUN RISE technologies
Tel: +662-324-3184-(89) Fax: +662-324-3190 / +662-324-3103
Website: www.sunrisegr.com Email: sale@sunrisegr.com

Mounting

Mounting Model: 18MK

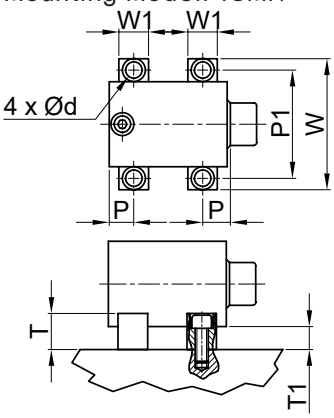

เชื่อมติดกับแก๊สสปริง
Welded

For Models:
18TSP
18TSX
18TST

Mounting Model	W	W1	P	P1	d	T	T1
18MK1000	89	24	17	68	11	20	12.7
18MK1500	105	26	21	83	13	30	17
18MK2400	118	26	23	95	13	32	19
18MK4200	137	26	23	115	13	32	19
18MK6600	174	32	26	146	17	32	19

For Models:
18TSM
18TSS
18TSL

Mounting Model	W	W1	P	P1	d	T	T1
18MK0750	89	24	17	68	11	20	12.7
18MK1500	118	26	23	95	13	32	19
18MK3000	137	26	23	115	13	32	19
18MK5000	174	32	26	146	17	32	19

Mounting Model: 18MS

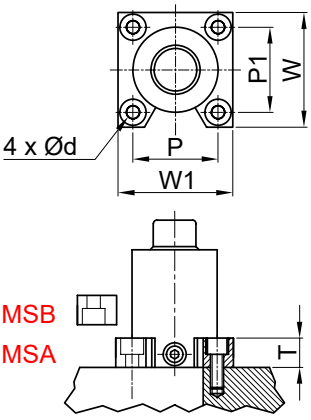

เชื่อมติดกับแก๊สสปริง
Welded

For Models:
18TSP
18TSX
18TST

Mounting Model	W	W1	P	P1	d	T
18MS_1000	76	76	54	54	11	25
18MS_1500	85	85	64	64	11	25
18MS_2400	102	102	76	76	13	25
18MS_4200	127	127	98	98	13	25
18MS_6600	140	140	114	114	13	25
18MS_9500	178	178	140	140	17.5	25

For Models:
18TSM
18TSS
18TSL

Mounting Model	W	W1	P	P1	d	T
18MS_0750	76	76	54	54	11	25
18MS_1500	102	102	76	76	13	25
18MS_3000	127	127	98	98	13	25
18MS_5000	140	140	114	114	13	25
18MS_7500	178	178	140	140	17.5	25
18MS_10000	224	224	178	178	21	25

Mounting Model: 18MT

เชื่อมติดกับแก๊สสปริง
Welded

For Models:
18TSM
18TSS
18TSL

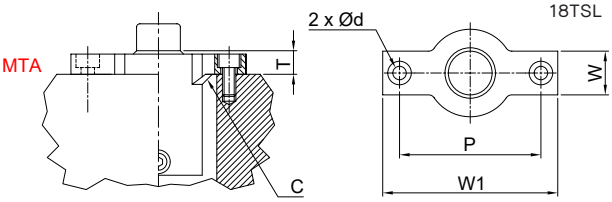

Mounting Model	W	W1	P	d	C	T
18MT0750	30	111	89	11	7	19
18MT1500	38	152	120	13	9	19
18MT3000	38	178	146	13	10	19
18MT5000	38	197	165	13	10	19

Mounting Model: 18MR

เชื่อมติดกับแก๊สสปริง
Welded

For Models:
18TSM
18TSS
18TSL

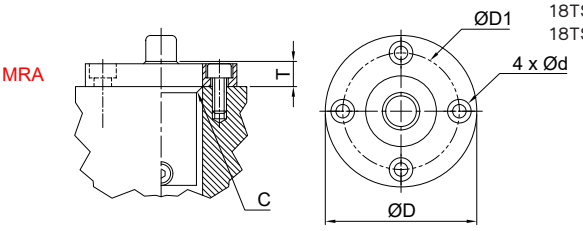

Mounting Model	D	D1	d	C	T
18MR0750	110	90	11	7	19
18MR1500	152	120	13	9	19
18MR3000	171	140	13	10	25
18MR5000	197	165	17	10	25

ดัชนี - INDEX

GROUP 13

1362720	Accessories	206
1362721	Accessories	206
1363720	Accessories	206
1363721	Accessories	206
1364720	Accessories	206
1364721	Accessories	206

GROUP 17

17BR	Accessories	208
17R376_	Accessories	207
17RST	Accessories	209
17ST	Accessories	208
17WST	Accessories	209

GROUP 18

18CB	Gas Spring	369
18HB	Gas Spring	369
18MD	Gas Spring	375
18MK	Gas Spring	376
18MR	Gas Spring	376
18MS	Gas Spring	376
18MT	Gas Spring	376
18PAN3	Gas Spring	368
18PAN6	Gas Spring	368
18PSS	Gas Spring	369
18SB	Gas Spring	373
18SC	Gas Spring	373
18SG	Gas Spring	373
18SP	Gas Spring	373
18SR	Gas Spring	374
18ST	Gas Spring	374
18TB	Gas Spring	375
18TSL	Gas Spring	361
18TSM	Gas Spring	347
18TSP	Gas Spring	323
18TSS	Gas Spring	357
18TST	Gas Spring	342
18TSX	Gas Spring	334
18XB	Gas Spring	374
18XC	Gas Spring	374
18XP	Gas Spring	374
18XR	Gas Spring	375
18XT	Gas Spring	375

GROUP 19

19SB	Die Spring	303
19SF	Die Spring	280
19SG	Die Spring	308
19SH	Die Spring	297
19SL	Die Spring	285
19SM	Die Spring	291
19SSR	Die Spring	277
19SSS	Die Spring	279
19SSU	Die Spring	275
19SSY	Die Spring	273

GROUP 21

21SPC	Accessories	206
21SPCF	Accessories	206
21SPLFL	Accessories	206
21SPLL	Accessories	206

GROUP 23

23UA-E	Urethane	317
23UA-ES	Urethane	318
23UA-H	Urethane	318
23UA-H-S(B)	Urethane	319
23UA-H-U(B)	Urethane	319
23UAX	Urethane	319
23UC-E	Urethane	317
23UC-ES	Urethane	318
23UC-H	Urethane	318
23US-E	Urethane	320
23US-H	Urethane	320

GROUP 24

24CB	Accessories	210

GROUP 25A

25ADR	Die Transfers	196
25AGL	Die Transfers	158
25AHC	Punch	58
25AP	Punch	49
25APAN	Retainer	92
25AP_-C	Punch	50
25APFN	Retainer	92
25APSG	Die Transfers	195
25APSG-B	Die Transfers	195
25APT	Pilot Punch	72
25APTP	Pilot Punch	73
25APTW	Punch	51
25ASFN	Retainer	95
25ASRN	Retainer	95
25ATA	Pilot Punch	61
25ATA_-C	Pilot Punch	63
25ATC	Pilot Punch	69
25ATKA	Pilot Punch	67
25ATKC	Pilot Punch	71
25ATMA	Pilot Punch	65
25ATMC	Pilot Punch	70

GROUP 25B

25BCR	Die Transfers	203
25BCRP	Die Transfers	203
25BD_	Button Die	83
25BD_-A	Button Die	86
25BD_-K	Button Die	84
25BDH_	Button Die	82
25BDH_-A	Button Die	85
25BLH	Die Transfers	164
25BLL	Die Transfers	164
25BLLF	Die Transfers	164
25BLR	Die Transfers	161
25B_ZZ	Die Transfers	204

GROUP 25C

25CDPI	Cam Slides	249
25CDPIL	Cam Slides	251
25CDPIS	Cam Slides	248
25CDPQI	Cam Slides	250
25CDPQW	Cam Slides	250
25CDPW	Cam Slides	249
25CDPWL	Cam Slides	251
25CDPWS	Cam Slides	248
25CGI	Cam Slides	244
25CGIL	Cam Slides	245
25CGW	Cam Slides	244
25CGWL	Cam Slides	245
25CHI	Die Transfers	204
25CKB	Cam Slides	246
25CKBF	Cam Slides	247
25CKBI	Cam Slides	247
25CKBW	Cam Slides	247
25CKRLI	Cam Slides	255
25CKRLW	Cam Slides	255
25CKRZW	Cam Slides	255
25CLTH	Die Transfers	170
25CMCSA	Cam Slides	249
25CNP-APSG	Die Transfers	196
25CNP-SODP	Die Transfers	196
25CPGPW	Cam Slides	252
25CPH	Accessories	222
25CPKH	Cam Slides	256
25CPKI	Cam Slides	256
25CPKW	Cam Slides	256
25CPL	Accessories	222
25CPM	Accessories	221
25CPR	Accessories	221
25CPRI	Cam Slides	253
25CPRIE	Cam Slides	254
25CPRIF	Cam Slides	254
25CPRIH	Cam Slides	253
25CPBW	Cam Slides	256
25CPBWS	Cam Slides	256
25CRPW	Cam Slides	257
25CRPWL	Cam Slides	257
25CRPWR	Cam Slides	257
25CSDPW	Cam Slides	241
25CSN	Die Transfers	200
25CSTA	Cam Slides	258
25CSTU	Cam Slides	258
25CUPF	Cam Slides	240
25CUPH	Cam Slides	241
25CUPI	Cam Slides	240
25CUPS	Cam Slides	240
25CUPW	Cam Slides	240

GROUP 25D

25DAPT	Pilot Punch	72
25DAPTP	Pilot Punch	73
25DATA	Pilot Punch	61
25DATA_-C	Pilot Punch	63
25DATC	Pilot Punch	69
25DATKA	Pilot Punch	67
25DATKC	Pilot Punch	71
25DATMA	Pilot Punch	65
25DATMC	Pilot Punch	70
25DG-MP	Punch	55
25DG-SP	Punch	47
25DHPA	Die Locating	149
25DHPF100	Die Locating	149
25DIKPA	Die Locating	141
25DIKPB	Die Locating	141
25DKLH	Die Transfers	199
25DLPA	Die Locating	141
25DMP	Punch	53
25DMPTW	Punch	54
25DMSPC	Punch	57
25DRAN	Retainer	93
25DRFN	Retainer	93
25DSK	Punch	56
25DSP	Punch	45
25DSP_-C	Punch	48
25DSPC	Punch	57
25DSPCPD	Punch	58
25DSPT	Pilot Punch	72
25DSPTP	Pilot Punch	73
25DSPTW	Punch	46
25DSTA	Pilot Punch	61
25DSTA_-C	Pilot Punch	63
25DSTC	Pilot Punch	69
25DSTKA	Pilot Punch	67
25DSTKC	Pilot Punch	71
25DSTMA	Pilot Punch	65
25DSTMC	Pilot Punch	70
25DTPA	Pilot Punch	61
25DTPA_-C	Pilot Punch	63
25DTPKA	Pilot Punch	67
25DTPKC	Pilot Punch	71
25DTPMA	Pilot Punch	65
25DTPMC	Pilot Punch	70
25DTPT	Pilot Punch	72
25DTPTP	Pilot Punch	73
25DTTC	Pilot Punch	69
25DVJ	Die Transfers	199

GROUP 25E

25EBP	Retainer	89
25ENGB	Die Locating	128
25ERAN	Retainer	91
25ERFN	Retainer	91

GROUP 25F

25FMHG	Punch Guide	80
25FMSG	Punch Guide	80
25FSBW	Guide & Bush	12

GROUP 25G

25GB	Die Set	39
25GBMF	Guide & Bush	3
25GK	Die Set	39
25GLB	Die Transfers	160
25GLBK	Die Transfers	160
25GLH	Die Transfers	157
25GLJS	Die Transfers	161
25GLK	Die Transfers	157
25GLP	Die Transfers	157
25GLR	Die Transfers	158
25GLSZ	Die Transfers	159
25GM	Die Set	39
25G-MP	Punch	55
25GP	Guide & Bush	4
25GPME	Guide & Bush	3
25G-SP	Punch	47

GROUP 25H

25H-AHC	Punch	58
25H-AP	Punch	49
25HAPAN	Retainer	98
25H-AP_-C	Punch	50
25HAPFN	Retainer	98
25HAPT	Pilot Punch	72
25H-APT	Pilot Punch	72
25HAPTP	Pilot Punch	73
25H-APTP	Pilot Punch	73
25H-APTW	Punch	51
25HASFN	Retainer	99
25HASRN	Retainer	99
25HATA	Pilot Punch	61
25H-ATA	Pilot Punch	61
25H-ATA_-C	Pilot Punch	63
25HATC	Pilot Punch	69
25H-ATC	Pilot Punch	69
25HATKA	Pilot Punch	67
25H-ATKA	Pilot Punch	67
25HATKC	Pilot Punch	71
25H-ATKC	Pilot Punch	71
25HATMA	Pilot Punch	65
25H-ATMA	Pilot Punch	65
25HATMC	Pilot Punch	70
25H-ATMC	Pilot Punch	70
25HBF	Guide & Bush	6
25HBT	Die Transfers	200
25HBTL	Die Transfers	200
25H-DAPT	Pilot Punch	72
25H-DAPTP	Pilot Punch	73
25H-DATA	Pilot Punch	61
25H-DATA_-C	Pilot Punch	63
25H-DATC	Pilot Punch	69
25H-DATKA	Pilot Punch	67
25H-DATKC	Pilot Punch	71
25H-DATMA	Pilot Punch	65
25H-DATMC	Pilot Punch	70
25H-DG-MP	Punch	55
25H-DG-SP	Punch	47
25H-DMP	Punch	53
25H-DMPTW	Punch	54
25H-DMSPC	Punch	57
25H-DSK	Punch	56
25H-DSP	Punch	45
25H-DSP_-C	Punch	48
25H-DSPC	Punch	57
25H-DSPCPD	Punch	58
25H-DSPT	Pilot Punch	72
25H-DSPTP	Pilot Punch	73
25H-DSPTW	Punch	46
25H-DSTA	Pilot Punch	61
25H-DSTA_-C	Pilot Punch	63
25H-DSTC	Pilot Punch	69
25H-DSTKC	Pilot Punch	71
25H-DSTMA	Pilot Punch	65
25H-DSTMC	Pilot Punch	70
25H-DTPA	Pilot Punch	61
25H-DTPA_-C	Pilot Punch	63
25H-DTPKA	Pilot Punch	67
25H-DTPKC	Pilot Punch	71
25H-DTPMA	Pilot Punch	65
25H-DTPMC	Pilot Punch	70
25H-DTPT	Pilot Punch	72
25H-DTPTP	Pilot Punch	73
25H-DTTC	Pilot Punch	69
25HERAN	Retainer	97
25HERFN	Retainer	97
25HG-MP	Punch	55
25H-G-MP	Punch	55
25HG-SP	Punch	47
25H-G-SP	Punch	47

SUN RISE technologies
Tel: +662-324-3184-(89) Fax: +662-324-3190 / +662-324-3103
Website: www.sunrisegr.com Email: sale@sunrisegr.com

ดัชนี - INDEX

25H-HAPT Pilot Punch 72
25H-HAPTP Pilot Punch 73
25H-HATA Pilot Punch 61
25H-HATC Pilot Punch 69
25H-HATKA Pilot Punch 67
25H-HATKC Pilot Punch 71
25H-HATMA Pilot Punch 65
25H-HATMC Pilot Punch 70
25H-HG-MP Punch 55
25H-HG-SP Punch 47
25H-HMP Punch 53
25H-HMPTW Punch 54
25H-HMSPC Punch 57
25H-HSK Punch 56
25H-HSP Punch 45
25H-HSP_-C Punch 48
25H-HSPC Punch 57
25H-HSPCPD Punch 58
25H-HSPT Pilot Punch 72
25H-HSPTP Pilot Punch 73
25H-HSPTW Punch 46
25H-HSTA Pilot Punch 61
25H-HSTC Pilot Punch 69
25H-HSTKA Pilot Punch 67
25H-HSTKC Pilot Punch 71
25H-HSTMA Pilot Punch 65
25H-HSTMC Pilot Punch 70
25H-HTPA Pilot Punch 61
25H-HTPKA Pilot Punch 67
25H-HTPKC Pilot Punch 71
25H-HTPMA Pilot Punch 65
25H-HTPMC Pilot Punch 70
25H-HTPT Pilot Punch 72
25H-HTPTP Pilot Punch 73
25H-HTTC Pilot Punch 69
25HLFB Die Transfers 199
25HMP Punch 53
25H-MP Punch 53
25HMPTW Punch 54
25H-MPTW Punch 54
25HMSPC Punch 57
25H-MSPC Punch 57
25H-PAHC Punch 58
25H-PAP_-C Punch 50
25H-PAPT Pilot Punch 72
25H-PAPTP Pilot Punch 73
25H-PAPTW Punch 51
25H-PATA Pilot Punch 61
25H-PATC Pilot Punch 69
25H-PATKA Pilot Punch 67
25H-PATKC Pilot Punch 71
25H-PATMA Pilot Punch 65
25H-PATMC Pilot Punch 70
25H-PG-MP Punch 55
25H-PG-SP Punch 47
25H-PHTAL Punch 52
25H-PMP Punch 53
25H-PMPTW Punch 54
25H-PMSPC Punch 57
25HPOP Die Locating 149
25H-PPHTAL Punch 52
25H-PSJ Punch 49
25H-PSK Punch 56
25H-PSP Punch 45
25H-PSP_-C Punch 48
25H-PSPC Punch 57
25H-PSPCPD Punch 58
25H-PSPT Pilot Punch 72
25H-PSPTP Pilot Punch 73
25H-PSPTW Punch 46
25H-PSTA Pilot Punch 61
25H-PSTC Pilot Punch 69
25H-PSTKA Pilot Punch 67
25H-PSTKC Pilot Punch 71
25H-PSTMA Pilot Punch 65
25H-PSTMC Pilot Punch 70
25H-PTPA Pilot Punch 61
25H-PTPKA Pilot Punch 67
25H-PTPKC Pilot Punch 71
25H-PTPMA Pilot Punch 65
25H-PTPMC Pilot Punch 70
25H-PTPT Pilot Punch 72
25H-PTPTP Pilot Punch 73
25H-PTSSHAS Punch 52
25H-PTTC Pilot Punch 69
25HPT Die Transfers 201
25HPTL Die Transfers 202
25HSFN Retainer 99
25HSK Punch 56
25H-SK Punch 56
25HSP Punch 45
25H-SP Punch 45
25HSP_-C Punch 48
25H-SP_-C Punch 48
25HSPC Punch 57
25H-SPC Punch 57
25HSPCPD Punch 58
25H-SPCPD Punch 58
25HSPT Pilot Punch 72
25H-SPT Pilot Punch 72
25HSPTP Pilot Punch 73
25H-SPTP Pilot Punch 73
25HSPTW Punch 46
25H-SPTW Punch 46
25HSRN Retainer 99
25HSTA Pilot Punch 61
25H-STA Pilot Punch 61
25H-STA_-C Pilot Punch 63
25HSTC Pilot Punch 69
25H-STC Pilot Punch 69
25HSTKA Pilot Punch 67
25H-STKA Pilot Punch 67
25H-STKA Pilot Punch 67
25HSTKC Pilot Punch 71
25H-STKC Pilot Punch 71
25HSTMA Pilot Punch 65
25H-STMA Pilot Punch 65
25HSTMC Pilot Punch 70
25H-STMC Pilot Punch 70
25HKFM-L Die Locating 122
25HKFM-R Die Locating 122
25HTPA Pilot Punch 61
25H-TPA Pilot Punch 61
25H-TPA_-C Pilot Punch 63
25HTPKA Pilot Punch 67
25H-TPKA Pilot Punch 67
25HTPKC Pilot Punch 71
25H-TPKC Pilot Punch 71
25HTPMA Pilot Punch 65
25H-TPMA Pilot Punch 65
25HTPMC Pilot Punch 70
25H-TPMC Pilot Punch 70
25HTPT Pilot Punch 72
25H-TPT Pilot Punch 72
25HTPTP Pilot Punch 73
25H-TPTP Pilot Punch 73
25H-TSSHAS Punch 52
25HTTC Pilot Punch 69
25H-TTC Pilot Punch 69

GROUP 25I

25IKPDA Die Locating 142
25IKPDB Die Locating 142
25IKPDC Die Locating 142
25IKPDE Die Locating 142

GROUP 25J

25JLP Die Transfers 162
25JPWH Die Transfers 165

GROUP 25K

25KOP Die Transfers 165
25KWN Accessories 220

GROUP 25L

25L-AHC Punch 58
25L-AP Punch 49
25L-AP_-C Punch 50
25L-APT Pilot Punch 72
25L-APTP Pilot Punch 73
25L-APTW Punch 51
25L-ATA Pilot Punch 61
25L-ATA_-C Pilot Punch 63
25L-ATC Pilot Punch 69
25L-ATKA Pilot Punch 67
25L-ATKC Pilot Punch 71
25L-ATMA Pilot Punch 65
25L-ATMC Pilot Punch 70
25L-DAPT Pilot Punch 72
25L-DAPTP Pilot Punch 73
25L-DATA Pilot Punch 61
25L-DATA_-C Pilot Punch 63
25L-DATC Pilot Punch 69
25L-DATKA Pilot Punch 67
25L-DATKC Pilot Punch 71
25L-DATMA Pilot Punch 65
25L-DATMC Pilot Punch 70
25L-DG-MP Punch 55
25L-DG-SP Punch 47
25L-DMP Punch 53
25L-DMPTW Punch 54
25L-DMSPC Punch 57
25L-DSK Punch 56
25L-DSP Punch 45
25L-DSP_-C Punch 48
25L-DSPC Punch 57
25L-DSPCPD Punch 58
25L-DSPT Pilot Punch 72
25L-DSPTP Pilot Punch 73
25L-DSPTW Punch 46
25L-DSTA Pilot Punch 61
25L-DSTA_-C Pilot Punch 63
25L-DSTC Pilot Punch 69
25L-DSTKA Pilot Punch 67
25L-DSTKC Pilot Punch 71
25L-DSTMA Pilot Punch 65
25L-DSTMC Pilot Punch 70
25L-DTPA Pilot Punch 61
25L-DTPA_-C Pilot Punch 63
25L-DTPKA Pilot Punch 67
25L-DTPKC Pilot Punch 71
25L-DTPMA Pilot Punch 65
25L-DTPMC Pilot Punch 70
25L-DTPT Pilot Punch 72
25L-DTPTP Pilot Punch 73
25L-DTTC Pilot Punch 69
25LGIL Die Transfers 182
25L-G-MP Punch 55
25LGPPS Die Transfers 184
25LGPS Die Transfers 184
25L-G-SP Punch 47
25LHAH Die Transfers 159
25L-HAPT Pilot Punch 72
25L-HAPTP Pilot Punch 73
25L-HATA Pilot Punch 61
25L-HATC Pilot Punch 69
25L-HATKA Pilot Punch 67
25L-HATKC Pilot Punch 71
25L-HATMA Pilot Punch 65
25L-HATMC Pilot Punch 70
25L-HG-MP Punch 55
25L-HG-SP Punch 47
25LHH Die Transfers 163
25LHHV Die Transfers 163
25L-HMP Punch 53
25L-HMPTW Punch 54
25L-HMSPC Punch 57
25L-HSK Punch 56
25L-HSP Punch 45
25L-HSP_-C Punch 48
25L-HSPC Punch 57
25L-HSPCPD Punch 58
25L-HSPT Pilot Punch 72
25L-HSPTP Pilot Punch 73
25L-HSPTW Punch 46
25L-HSTA Pilot Punch 61
25L-HSTC Pilot Punch 69
25L-HSTKA Pilot Punch 67
25L-HSTKC Pilot Punch 71
25L-HSTMA Pilot Punch 65
25L-HSTMC Pilot Punch 70
25L-HTPA Pilot Punch 61
25L-HTPKA Pilot Punch 67
25L-HTPKC Pilot Punch 71
25L-HTPMA Pilot Punch 65
25L-HTPMC Pilot Punch 70
25L-HTPT Pilot Punch 72
25L-HTPTP Pilot Punch 73
25L-HTTC Pilot Punch 69
25LJS Die Transfers 161
25LMHG Punch Guide Bush 78
25L-MP Punch 53
25L-MPTW Punch 54
25LMSG Punch Guide Bush 79
25L-MSPC Punch 57
25LP Die Transfers 162
25LPAH Die Transfers 159
25L-PAHC Punch 58
25L-PAP_-C Punch 50
25L-PAPT Pilot Punch 72
25L-PAPTP Pilot Punch 73
25L-PAPTW Punch 51
25L-PATA Pilot Punch 61
25L-PATC Pilot Punch 69
25L-PATKA Pilot Punch 67
25L-PATKC Pilot Punch 71
25L-PATMA Pilot Punch 65
25L-PATMC Pilot Punch 70
25LPE Accessories 224
25L-PG-MP Punch 55
25L-PG-SP Punch 47
25LPH Die Transfers 162
25L-PHTAL Punch 52
25LPL Die Locating 142
25L-PMP Punch 53
25L-PMPTW Punch 54
25L-PMSPC Punch 57
25L-PPHTAL Punch 52
25L-PSJ Punch 49
25L-PSK Punch 56
25L-PSP Punch 45
25L-PSP_-C Punch 48
25L-PSPC Punch 57
25L-PSPCPD Punch 58
25L-PSPT Pilot Punch 72
25L-PSPTP Pilot Punch 73
25L-PSPTW Punch 46
25L-PSTA Pilot Punch 61
25L-PSTC Pilot Punch 69
25L-PSTKA Pilot Punch 67
25L-PSTKC Pilot Punch 71
25L-PSTMA Pilot Punch 65
25L-PSTMC Pilot Punch 70
25L-PTPA Pilot Punch 61
25L-PTPKA Pilot Punch 67
25L-PTPKC Pilot Punch 71
25L-PTPMA Pilot Punch 65
25L-PTPMC Pilot Punch 70
25L-PTPT Pilot Punch 72
25L-PTPTP Pilot Punch 73
25L-PTSSHAS Punch 52
25L-PTTC Pilot Punch 69
25LPU Die Locating 142
25L-SK Punch 56
25L-SP Punch 45
25L-SP_-C Punch 48
25L-SPC Punch 57
25L-SPCPD Punch 58
25L-SPT Pilot Punch 72
25L-SPTP Pilot Punch 73
25L-SPTW Punch 46
25L-STA Pilot Punch 61
25L-STA_-C Pilot Punch 63
25L-STC Pilot Punch 69
25L-STKA Pilot Punch 67
25L-STKC Pilot Punch 71
25L-STMA Pilot Punch 65
25L-STMC Pilot Punch 70
25LTHS Die Transfers 170

ดัชนี - INDEX

25L-TPA Pilot Punch 61
25L-TPA_-C Pilot Punch 63
25L-TPKA Pilot Punch 67
25L-TPKC Pilot Punch 71
25L-TPMA Pilot Punch 65
25L-TPMC Pilot Punch 70
25L-TPT Pilot Punch 72
25L-TPTP Pilot Punch 73
25L-TSSHAS Punch 52
25L-TTC Pilot Punch 69

GROUP 25M

25MEG Pilot Punch 74
25MHG Punch Guide 76
25MLGT Die Transfers 177
25MP Punch 53
25MPTW Punch 54
25MRTB Die Locating 150
25MRTBY Die Locating 150
25MSG Punch Guide 77
25MSPC Punch 57
25MSRGF Cam Slides 243
25MSRGW Cam Slides 243
25MSTS Slide Plates 230

GROUP 25N

25NBB Die Locating 134
25NBBC Die Locating 134
25NBBCL Die Locating 134
25N-PSTMA Pilot Punch 65
25N-SYP Guide Post Set 22
25N-SYZP Guide Post Set 22

GROUP 25P

25PADG-BL Die Locating 123
25PADG-BR Die Locating 123
25PAHC Punch 58
25PAP_-C Punch 50
25PAPT Pilot Punch 72
25PAPTP Pilot Punch 73
25PAPTW Punch 51
25PATA Pilot Punch 61
25PATC Pilot Punch 69
25PATKA Pilot Punch 67
25PATKC Pilot Punch 71
25PATMA Pilot Punch 65
25PATMC Pilot Punch 70
25PB Die Set 39
25PD Die Set 41
25PGLI Die Transfers 183
25PG-MP Punch 55
25PG-SP Punch 47
25PHTAL Punch 52
25PK Die Set 39
25PKDGM Die Locating 117
25PKS Guide & Bush 8
25PKSL Guide & Bush 8
25PKSLU Guide & Bush 8
25PKSU Guide & Bush 8
25PLP Accessories 224
25PM Die Set 39
25PMP Punch 53
25PMPTW Punch 54
25PMSPC Punch 57
25POP Die Locating 149
25PPHTAL Punch 52
25PRDG Die Locating 119
25PSJ Punch 49
25PSK Punch 56
25PSP Punch 45
25PSP_-C Punch 48
25PSPC Punch 57
25PSPCPD Punch 58
25PSPT Pilot Punch 72
25PSPTP Pilot Punch 73
25PSPTW Punch 46
25PST Die Locating 139
25PSTA Pilot Punch 61
25PSTC Pilot Punch 69
25PSTKA Pilot Punch 67
25PSTKC Pilot Punch 71
25PSTM Die Locating 139
25PSTMA Pilot Punch 65
25PSTMC Pilot Punch 70
25PSUA Retainer 104
25PSUB Retainer 104
25PSUE Retainer 104
25PSUR Retainer 104
25PTPA Pilot Punch 61
25PTPKA Pilot Punch 67
25PTPKC Pilot Punch 71
25PTPMA Pilot Punch 65
25PTPMC Pilot Punch 70
25PTPT Pilot Punch 72
25PTPTP Pilot Punch 73
25PTSSHAS Punch 52
25PTTC Pilot Punch 69
25PZ Die Set 41

GROUP 25Q

25QB Die Set 40
25QK Die Set 40
25QM Die Set 40

GROUP 25R

25RB Die Set 40
25RD Die Set 42
25RFPP Die Locating 139
25RK Die Set 40
25RM Die Set 40
25RSC Guide Post Set 28
25RTP Die Locating 140
25RTPE Die Locating 140
25RZ Die Set 42

GROUP 25S

25SB Die Set 31
25SBA Die Transfers 169
25SB-A Accessories 211
25SBCBC Die Transfers 188
25SBCBHA Die Transfers 191
25SBCBHB Die Transfers 191
25SBCCR Die Transfers 192
25SBCHA Die Transfers 188
25SBCHB Die Transfers 188
25SBCHC Die Transfers 188
25SBCJ Die Transfers 190
25SBCJP Die Transfers 191
25SBCL Die Transfers 190
25SBCLA Die Transfers 189
25SBCLB Die Transfers 189
25SBCP Die Transfers 192
25SBCRA Die Transfers 187
25SBCRB Die Transfers 187
25SBCS Die Transfers 190
25SBCSA Die Transfers 189
25SBCSB Die Transfers 189
25S-BD_ Button Die 88
25S-BDH_ Button Die 87
25SB-J Accessories 211
25SBM Die Transfers 169
25SBN Accessories 213
25SBS Accessories 213
25SBV Accessories 212
25SBVH Accessories 212
25SBVK Accessories 214
25SBVM Accessories 212
25SBW Guide & Bush 9-10
25SC Die Set 33
25SCBH Accessories 217
25SCPAH Cam Slides 242
25SCPH Cam Slides 242
25SCSR Accessories 214
25SCSRE Accessories 215
25SCSRUR Accessories 215
25SCUF Cam Slides 239
25SCUI Cam Slides 239
25SCUS Cam Slides 239
25SCUW Cam Slides 239
25SD Die Set 35
25SDA Die Transfers 197
25SDB Die Transfers 198
25SDKL Die Locating 137
25SD-PAEA-S Die Locating 147
25SD-PAEA-U Die Locating 147
25SD-PAGP-S Die Locating 145
25SD-PAGP-U Die Locating 145
25SD-PAP-S Die Locating 145
25SD-PAP-U Die Locating 145
25SD-PAP-Z-S Die Locating 146
25SD-PAP-Z-U Die Locating 146
25SDSEB Guide & Bush 6
25SDST Die Locating 137
25SEB Guide Post Set 27
25SEBA Guide Post Set 26
25SEBA-S Guide Post Set 28
25SEB-S Guide Post Set 28
25SEB-W Guide Post Set 28
25SEBY Guide Post Set 26
25SEBY-S Guide Post Set 28
25SEC Accessories 213
25SEGDR Die Transfers 154
25SENGX Die Locating 132
25SF Die Set 37
25SFCI Cam Slides 246
25SFCIB Cam Slides 246
25SFL Die Transfers 178
25SFLG Die Transfers 180
25SFLK Die Transfers 179
25SFLPA Die Transfers 186
25SFN Retainer 95
25SFRG Die Transfers 186
25SFSG Die Transfers 185
25SFSTH Die Locating 138
25SGA Die Spring 314
25SGAD Die Locating 120
25SGBC Stripper G&B 112
25SGBF Guide & Bush 5
25SGBW Guide & Bush 5
25SGCC Stripper G&B 112
25SGCT Die Locating 121
25SGR Die Spring 315-316
25SGDRTA Die Transfers 154
25SGDRTB Die Transfers 154
25SGEB Guide & Bush 6
25SGFC Stripper G&B 112
25SGFW Guide & Bush 5
25SGHB Stripper G&B 111
25SGHC Stripper G&B 112
25SGO Guide & Bush 18
25SGOA Guide & Bush 18
25SGOB Guide & Bush 18
25SGPF Guide & Bush 14
25SGPOB Guide & Bush 4
25SGPSB Guide & Bush 4
25SGPZ Guide & Bush 15
25SGSB Stripper G&B 111
25SGTA Stripper G&B 111
25SGTB Stripper G&B 111
25SGW Guide & Bush 17
25SGWA Guide & Bush 17
25SGWB Guide & Bush 17
25SHGC Die Transfers 171
25SHGF Die Transfers 175
25SHGT Die Transfers 172
25SHKD Guide & Bush 7
25SHLS Die Transfers 176
25SJKP Guide Post Set 25
25SK Punch 56
25SKEB Guide & Bush 7
25SKIL Die Transfers 181
25SKIL-B Die Transfers 185
25SKPN Guide & Bush 19
25SKPNP Guide & Bush 20
25SKPNZ Guide & Bush 19
25SKSTH Die Locating 138
25SLA -EA Retainer 102
25SLA-EH Retainer 103
25SLA -FA Retainer 102
25SLA-FH Retainer 103
25SLA -SEA Retainer 102
25SLA -SFA Retainer 102
25SLC-EA Retainer 101
25SLCE-I Die Transfers 156
25SLCE-W Die Transfers 156
25SLC-FA Retainer 101
25SLC-SEA Retainer 101
25SLC-SFA Retainer 101
25SLC-W Die Transfers 156
25SLK Accessories 220
25SLMHG Punch Guide Bush 80
25SLMSG Punch Guide Bush 80
25SLPS Die Locating 136
25SLS-EA Retainer 100
25SLS-FA Retainer 100
25SLSPH Slide Plates 235
25SLS-SEA Retainer 100
25SLS-SFA Retainer 100
25SLTL Die Locating 135
25SMP Slide Plates 234
25SNGA Die Locating 130
25SNGC Die Locating 130
25SNGG Die Locating 129
25SNGN Die Locating 128
25SNGNX Die Locating 132
25SNGU Die Locating 127
25SNGW Die Locating 133
25SNGWK Die Locating 133
25SNGWS Die Locating 133
25SNST Die Locating 136
25SNSTA Die Locating 131
25SNSTC Die Locating 131
25SNSTD Die Locating 131
25SNTFA Die Locating 135
25SNTFB Die Locating 135
25SODA-B Die Locating 116
25SODA-BT Die Locating 115
25SODA-RT Die Locating 118
25SODP Die Transfers 193
25SOLW Slide Plates 236
25SO-PSH Die Transfers 196
25SOSP Die Transfers 194
25SP Punch 45
25S-PAP Die Locating 143
25S-PAP-E Die Locating 144
25S-PAP-EU Die Locating 144
25S-PAP-U Die Locating 143
25SPBA Stripper G&B 110
25SPBH Stripper G&B 110
25SP_-C Punch 48
25SPC Punch 57
25SPCPD Punch 58
25S-PSH Die Locating 148
25S-PSPH Die Locating 148
25SPT Pilot Punch 72
25SPTP Pilot Punch 73
25SPTW Punch 46
25SPWN Guide & Bush 20
25SRG Die Locating 126
25SRG-L Die Locating 126
25SRG-R Die Locating 126
25SRN Retainer 95
25SSB Guide Post Set 27
25SSBA Guide Post Set 26
25SSBRS Die Transfers 203
25SSBY Guide Post Set 26
25SSG Die Transfers 167
25SSGNW Die Locating 124
25SSGW Die Locating 125
25SSRH Accessories 216
25SSRL Die Transfers 155
25SSRT Accessories 216
25SSRTA Accessories 216
25SSRTB Accessories 216
25SSRZ Accessories 217
25STA Pilot Punch 61
25STA_-C Pilot Punch 63
25STB Die Locating 150

SUN RISE technologies
Tel: +662-324-3184-(89) Fax: +662-324-3190 / +662-324-3103
Website: www.sunrisegr.com Email: sale@sunrisegr.com

ดัชนี - INDEX

25STBY Die Locating 150
25STC Pilot Punch 69
25STG Die Transfers 153
25STGE Die Transfers 153
25STGF Accessories 223
25STGN Die Transfers 153
25STGR Stripper G&B 109
25STGW Accessories 223
25STKA Pilot Punch 67
25STKC Pilot Punch 71
25STMA Pilot Punch 65
25STMC Pilot Punch 70
25STOH Stripper G&B 107
25STOKSF Cam Slides 259
25STOKSL Cam Slides 259
25STON Stripper G&B 108
25STOR Stripper G&B 109
25STPB Accessories 219
25STPH Stripper G&B 107
25STPK Accessories 219
25STPKS Accessories 219
25STPM Accessories 218
25STPME Accessories 218
25STPMS Accessories 218
25STPN Stripper G&B 108
25STPW Stripper G&B 110
25STPY Accessories 218
25STPYE Accessories 218
25STWI Slide Plates 233
25STWW Slide Plates 228
25STWWD Slide Plates 228
25SUK Die Spring 312-313
25SUK-A Die Transfers 167
25SUKA Cam Slides 269
25SUK-B Die Transfers 167
25SUKE Accessories 220
25SUKFA Cam Slides 270
25SUKFP Cam Slides 270
25SUKI Cam Slides 269
25SUKS Cam Slides 269
25SUKSA Cam Slides 270
25SUL Cam Slides 261
25SUM Cam Slides 261
25SWF Slide Plates 231
25SWFD Slide Plates 231
25SWGAZ Guide & Bush 16
25SWGB-I Guide & Bush 13
25SWGB-S Guide & Bush 13
25SWGB-W Guide & Bush 13
25SWGBZ Guide & Bush 16
25SWGZ Guide & Bush 16
25SWI Slide Plates 232
25SWUL Cam Slides 267
25SWUM Cam Slides 267
25SWW Slide Plates 227
25SWWD Slide Plates 227
25SYAP Guide Post Set 24
25SYJP Guide Post Set 24
25SYKP Guide Post Set 25
25SYP Guide Post Set 23
25SYZP Guide Post Set 23

GROUP 25T

25TC-AHC Punch 58
25TC-AP Punch 49
25TC-AP_-C Punch 50
25TC-APT Pilot Punch 72
25TC-APTP Pilot Punch 73
25TC-APTW Punch 51
25TC-ATA Pilot Punch 61
25TC-ATA_-C Pilot Punch 63
25TC-ATC Pilot Punch 69
25TC-ATKA Pilot Punch 67
25TC-ATKC Pilot Punch 71
25TC-ATMA Pilot Punch 65
25TC-ATMC Pilot Punch 70
25TC-DAPT Pilot Punch 72
25TC-DAPTP Pilot Punch 73
25TC-DATA Pilot Punch 61
25TC-DATA_-C Pilot Punch 63
25TC-DATC Pilot Punch 69
25TC-DATKA Pilot Punch 67
25TC-DATKC Pilot Punch 71
25TC-DATMA Pilot Punch 65
25TC-DATMC Pilot Punch 70
25TC-DG-MP Punch 55
25TC-DG-SP Punch 47
25TC-DMP Punch 53
25TC-DMPTW Punch 54
25TC-DMSPC Punch 57
25TC-DSK Punch 56
25TC-DSP Punch 45
25TC-DSP_-C Punch 48
25TC-DSPC Punch 57
25TC-DSPCPD Punch 58
25TC-DSPT Pilot Punch 72
25TC-DSPTP Pilot Punch 73
25TC-DSPTW Punch 46
25TC-DSTA Pilot Punch 61
25TC-DSTA_-C Pilot Punch 63
25TC-DSTC Pilot Punch 69
25TC-DSTKA Pilot Punch 67
25TC-DSTKC Pilot Punch 71
25TC-DSTMA Pilot Punch 65
25TC-DSTMC Pilot Punch 70
25TC-DTPA Pilot Punch 61
25TC-DTPA_-C Pilot Punch 63
25TC-DTPKA Pilot Punch 67
25TC-DTPKC Pilot Punch 71
25TC-DTPMA Pilot Punch 65
25TC-DTPMC Pilot Punch 70
25TC-DTPT Pilot Punch 72
25TC-DTPTP Pilot Punch 73
25TC-DTTC Pilot Punch 69
25TC-G-MP Punch 55
25TC-G-SP Punch 47
25TC-HAPT Pilot Punch 72
25TC-HAPTP Pilot Punch 73
25TC-HATA Pilot Punch 61
25TC-HATC Pilot Punch 69
25TC-HATKA Pilot Punch 67
25TC-HATKC Pilot Punch 71
25TC-HATMA Pilot Punch 65
25TC-HATMC Pilot Punch 70
25TC-HG-MP Punch 55
25TC-HG-SP Punch 47
25TC-HMP Punch 53
25TC-HMPTW Punch 54
25TC-HMSPC Punch 57
25TC-HSK Punch 56
25TC-HSP Punch 45
25TC-HSP_-C Punch 48
25TC-HSPC Punch 57
25TC-HSPCPD Punch 58
25TC-HSPT Pilot Punch 72
25TC-HSPTP Pilot Punch 73
25TC-HSPTW Punch 46
25TC-HSTA Pilot Punch 61
25TC-HSTC Pilot Punch 69
25TC-HSTKA Pilot Punch 67
25TC-HSTKC Pilot Punch 71
25TC-HSTMA Pilot Punch 65
25TC-HSTMC Pilot Punch 70
25TC-HTPA Pilot Punch 61
25TC-HTPKA Pilot Punch 67
25TC-HTPKC Pilot Punch 71
25TC-HTPMA Pilot Punch 65
25TC-HTPMC Pilot Punch 70
25TC-HTPT Pilot Punch 72
25TC-HTPTP Pilot Punch 73
25TC-HTTC Pilot Punch 69
25TC-MP Punch 53
25TC-MPTW Punch 54
25TC-MSPC Punch 57
25TCPA Accessories 223
25TC-PAHC Punch 58
25TC-PAP_-C Punch 50
25TC-PAPT Pilot Punch 72
25TC-PAPTP Pilot Punch 73
25TC-PAPTW Punch 51
25TC-PATA Pilot Punch 61
25TC-PATC Pilot Punch 69
25TC-PATKA Pilot Punch 67
25TC-PATKC Pilot Punch 71
25TC-PATMA Pilot Punch 65
25TC-PATMC Pilot Punch 70
25TCPB Accessories 223
25TC-PG-MP Punch 55
25TC-PG-SP Punch 47
25TC-PHTAL Punch 52
25TC-PMP Punch 53
25TC-PMPTW Punch 54
25TC-PMSPC Punch 57
25TC-PPHTAL Punch 52
25TC-PSJ Punch 49
25TC-PSK Punch 56
25TC-PSP Punch 45
25TC-PSP_-C Punch 48
25TC-PSPC Punch 57
25TC-PSPCPD Punch 58
25TC-PSPT Pilot Punch 72
25TC-PSPTP Pilot Punch 73
25TC-PSPTW Punch 46
25TC-PSTA Pilot Punch 61
25TC-PSTC Pilot Punch 69
25TC-PSTKA Pilot Punch 67
25TC-PSTKC Pilot Punch 71
25TC-PSTMA Pilot Punch 65
25TC-PSTMC Pilot Punch 70
25TC-PTPA Pilot Punch 61
25TC-PTPKA Pilot Punch 67
25TC-PTPKC Pilot Punch 71
25TC-PTPMA Pilot Punch 65
25TC-PTPMC Pilot Punch 70
25TC-PTPT Pilot Punch 72
25TC-PTPTP Pilot Punch 73
25TC-PTSSHAS Punch 52
25TC-PTTC Pilot Punch 69
25TC-SK Punch 56
25TC-SP Punch 45
25TC-SP_-C Punch 48
25TC-SPC Punch 57
25TC-SPCPD Punch 58
25TC-SPT Pilot Punch 72
25TC-SPTP Pilot Punch 73
25TC-SPTW Punch 46
25TC-STA Pilot Punch 61
25TC-STA_-C Pilot Punch 63
25TC-STC Pilot Punch 69
25TC-STKA Pilot Punch 67
25TC-STKC Pilot Punch 71
25TC-STMA Pilot Punch 65
25TC-STMC Pilot Punch 70
25TC-TPA Pilot Punch 61
25TC-TPA_-C Pilot Punch 63
25TC-TPKA Pilot Punch 67
25TC-TPKC Pilot Punch 71
25TC-TPMA Pilot Punch 65
25TC-TPMC Pilot Punch 70
25TC-TPT Pilot Punch 72
25TC-TPTP Pilot Punch 73
25TC-TSSHAS Punch 52
25TC-TTC Pilot Punch 69
25TD-DAPT Pilot Punch 72
25TD-DAPTP Pilot Punch 73
25TD-DATA Pilot Punch 61
25TD-DATA_-C Pilot Punch 63
25TD-DATC Pilot Punch 69
25TD-DATKA Pilot Punch 67
25TD-DATKC Pilot Punch 71
25TD-DATMA Pilot Punch 65
25TD-DATMC Pilot Punch 70
25TD-DG-MP Punch 55
25TD-DG-SP Punch 47
25TD-DMP Punch 53
25TD-DMPTW Punch 54
25TD-DMSPC Punch 57
25TD-DSK Punch 56
25TD-DSP Punch 45
25TD-DSP_-C Punch 48
25TD-DSPC Punch 57
25TD-DSPCPD Punch 58
25TD-DSPT Pilot Punch 72
25TD-DSPTP Pilot Punch 73
25TD-DSPTW Punch 46
25TD-DSTA Pilot Punch 61
25TD-DSTA_-C Pilot Punch 63
25TD-DSTC Pilot Punch 69
25TD-DSTKA Pilot Punch 67
25TD-DSTKC Pilot Punch 71
25TD-DSTMA Pilot Punch 65
25TD-DSTMC Pilot Punch 70
25TD-DTPA Pilot Punch 61
25TD-DTPA_-C Pilot Punch 63
25TD-DTPKA Pilot Punch 67
25TD-DTPKC Pilot Punch 71
25TD-DTPMA Pilot Punch 65
25TD-DTPMC Pilot Punch 70
25TD-DTPT Pilot Punch 72
25TD-DTPTP Pilot Punch 73
25TD-DTTC Pilot Punch 69
25TE(A,B,C,E,L) Die Locating 134
25TLPA Die Locating 141
25TLPB Die Locating 141
25TLPC Die Locating 141
25TN-AHC Punch 58
25TN-AP Punch 49
25TN-AP_-C Punch 50
25TN-APT Pilot Punch 72
25TN-APTP Pilot Punch 73
25TN-APTW Punch 51
25TN-ATA Pilot Punch 61
25TN-ATA_-C Pilot Punch 63
25TN-ATC Pilot Punch 69
25TN-ATKA Pilot Punch 67
25TN-ATKC Pilot Punch 71
25TN-ATMA Pilot Punch 65
25TN-ATMC Pilot Punch 70
25TN-DAPT Pilot Punch 72
25TN-DAPTP Pilot Punch 73
25TN-DATA Pilot Punch 61
25TN-DATA_-C Pilot Punch 63
25TN-DATC Pilot Punch 69
25TN-DATKA Pilot Punch 67
25TN-DATKC Pilot Punch 71
25TN-DATMA Pilot Punch 65
25TN-DATMC Pilot Punch 70
25TN-DG-MP Punch 55
25TN-DG-SP Punch 47
25TN-DMP Punch 53
25TN-DMPTW Punch 54
25TN-DMSPC Punch 57
25TN-DSK Punch 56
25TN-DSP Punch 45
25TN-DSP_-C Punch 48
25TN-DSPC Punch 57
25TN-DSPCPD Punch 58
25TN-DSPT Pilot Punch 72
25TN-DSPTP Pilot Punch 73
25TN-DSPTW Punch 46
25TN-DSTA Pilot Punch 61
25TN-DSTA_-C Pilot Punch 63
25TN-DSTC Pilot Punch 69
25TN-DSTKA Pilot Punch 67
25TN-DSTKC Pilot Punch 71
25TN-DSTMA Pilot Punch 65
25TN-DSTMC Pilot Punch 70
25TN-DTPA Pilot Punch 61
25TN-DTPA_-C Pilot Punch 63
25TN-DTPKA Pilot Punch 67
25TN-DTPKC Pilot Punch 71
25TN-DTPMA Pilot Punch 65
25TN-DTPMC Pilot Punch 70
25TN-DTPT Pilot Punch 72
25TN-DTPTP Pilot Punch 73
25TN-DTTC Pilot Punch 69
25TN-G-MP Punch 55
25TN-G-SP Punch 47
25TN-HAPT Pilot Punch 72
25TN-HAPTP Pilot Punch 73

25TN-HATA	Pilot Punch	61
25TN-HATC	Pilot Punch	69
25TN-HATKA	Pilot Punch	67
25TN-HATKC	Pilot Punch	71
25TN-HATMA	Pilot Punch	65
25TN-HATMC	Pilot Punch	70
25TN-HG-MP	Punch	55
25TN-HG-SP	Punch	47
25TN-HMP	Punch	53
25TN-HMPTW	Punch	54
25TN-HMSPC	Punch	57
25TN-HSK	Punch	56
25TN-HSP	Punch	45
25TN-HSP_-C	Punch	48
25TN-HSPC	Punch	57
25TN-HSPCPD	Punch	58
25TN-HSPT	Pilot Punch	72
25TN-HSPTP	Pilot Punch	73
25TN-HSPTW	Punch	46
25TN-HSTA	Pilot Punch	61
25TN-HSTC	Pilot Punch	69
25TN-HSTKA	Pilot Punch	67
25TN-HSTKC	Pilot Punch	71
25TN-HSTMA	Pilot Punch	65
25TN-HSTMC	Pilot Punch	70
25TN-HTPA	Pilot Punch	61
25TN-HTPKA	Pilot Punch	67
25TN-HTPKC	Pilot Punch	71
25TN-HTPMA	Pilot Punch	65
25TN-HTPMC	Pilot Punch	70
25TN-HTPT	Pilot Punch	72
25TN-HTPTP	Pilot Punch	73
25TN-HTTC	Pilot Punch	69
25TN-MP	Punch	53
25TN-MPTW	Punch	54
25TN-MSPC	Punch	57
25TN-PAHC	Punch	58
25TN-PAP_-C	Punch	50
25TN-PAPT	Pilot Punch	72
25TN-PAPTP	Pilot Punch	73
25TN-PAPTW	Punch	51
25TN-PATA	Pilot Punch	61
25TN-PATC	Pilot Punch	69
25TN-PATKA	Pilot Punch	67
25TN-PATKC	Pilot Punch	71
25TN-PATMA	Pilot Punch	65
25TN-PATMC	Pilot Punch	70
25TN-PG-MP	Punch	55
25TN-PG-SP	Punch	47
25TN-PHTAL	Punch	52
25TN-PMP	Punch	53
25TN-PMPTW	Punch	54
25TN-PMSPC	Punch	57
25TN-PPHTAL	Punch	52
25TN-PSJ	Punch	49
25TN-PSK	Punch	56
25TN-PSP	Punch	45
25TN-PSP_-C	Punch	48
25TN-PSPC	Punch	57
25TN-PSPCPD	Punch	58
25TN-PSPT	Pilot Punch	72
25TN-PSPTP	Pilot Punch	73
25TN-PSPTW	Punch	46
25TN-PSTA	Pilot Punch	61
25TN-PSTC	Pilot Punch	69
25TN-PSTKA	Pilot Punch	67
25TN-PSTKC	Pilot Punch	71
25TN-PSTMC	Pilot Punch	70
25TN-PTPA	Pilot Punch	61
25TN-PTPKA	Pilot Punch	67
25TN-PTPKC	Pilot Punch	71
25TN-PTPMA	Pilot Punch	65
25TN-PTPMC	Pilot Punch	70
25TN-PTPT	Pilot Punch	72
25TN-PTPTP	Pilot Punch	73
25TN-PTSSHAS	Punch	52
25TN-PTTC	Pilot Punch	69
25TN-SK	Punch	56
25TN-SP	Punch	45
25TN-SP_-C	Punch	48
25TN-SP_-C	Punch	48
25TN-SPC	Punch	57
25TN-SPCPD	Punch	58
25TN-SPT	Pilot Punch	72
25TN-SPTP	Pilot Punch	73
25TN-SPTW	Punch	46
25TN-STA	Pilot Punch	61
25TN-STA_-C	Pilot Punch	63
25TN-STC	Pilot Punch	69
25TN-STKA	Pilot Punch	67
25TN-STKC	Pilot Punch	71
25TN-STMA	Pilot Punch	65
25TN-STMC	Pilot Punch	70
25TN-TPA	Pilot Punch	61
25TN-TPA_-C	Pilot Punch	63
25TN-TPKA	Pilot Punch	67
25TN-TPKC	Pilot Punch	71
25TN-TPMA	Pilot Punch	65
25TN-TPMC	Pilot Punch	70
25TN-TPT	Pilot Punch	72
25TN-TPTP	Pilot Punch	73
25TN-TSSHAS	Punch	52
25TN-TTC	Pilot Punch	69
25TPA	Pilot Punch	61
25TPA_-C	Pilot Punch	63
25TPKA	Pilot Punch	67
25TPKC	Pilot Punch	71
25TPMA	Pilot Punch	65
25TPMC	Pilot Punch	70
25TPT	Pilot Punch	72
25TPTP	Pilot Punch	73
25TRAN	Retainer	96
25TRFN	Retainer	96
25TRP	Cam Slides	260
25T-RTP	Die Locating	140
25T-RTPE	Die Locating	140
25TSSHAS	Punch	52
25TTC	Pilot Punch	69

GROUP 25U

25UCST	Cam Slides	258
25UTWW	Slide Plates	229

GROUP 25W

25WSBW	Guide & Bush	11
25WSBW-N	Guide & Bush	11
25WSS	Accessories	220
25WUNT	Die Spring	314

GROUP 25Z

25ZGUA	Die Transfers	166
25ZGUB	Die Transfers	166
25ZORW	Die Transfers	155

Tel: +662-324-3184-(89) Fax: +662-324-3190 / +662-324-3103
Website: www.sunrisegr.com Email: sale@sunrisegr.com

ชิ้นส่วนแม่พิมพ์ปั๊ม
DIE COMPONENTS
STANDARD & CUSTOMIZABLE

OF
OIL FREE

Guide and Bush	ไกด์ และ บุช
Guide Post Sets	ไกด์โพสเซ็ต
Die Sets	ไดเซ็ต
Punches	พั้นช์
Pilot Punches	ไพล็อตพั้นช์
Punch Guide Bushes	ไกด์บุชสำหรับพั้นช์
Button Dies	บัททอนดาย
Retainers	รีเทนเนอร์สำหรับพั้นช์
Stripper Guide Bushes	สตริปเปอร์ไกด์และบุช
Locating Components	ชิ้นส่วนหาตำแหน่ง
Die Transfer Systems	ระบบเคลื่อนย้ายแม่พิมพ์
Accessories	ชิ้นส่วนทั่วไป
Cam Slides	แคมสไลด์
Slide Plates	สไลด์เพลท
Die Springs	สปริงแม่พิมพ์
Urethane Springs	ยูรีเทนสปริง
Gas Springs	แก๊สสปริง

SUN RISE
technologies

บริษัท ซันไรส์ เทคโนโลยี จำกัด
969 หมู่ 5 ถ.แพรกษา ต.แพรกษาใหม่
อ.เมืองสมุทรปราการ, จ.สมุทรปราการ, 10280

SUN RISE TECHNOLOGIES Co.,LTD.
969 moo 5 Praksa Rd., Praksa Mai
Muang Samuthprakarn, Samuthprakarn, 10280, Thailand

Tel: +662-324-3184 **Fax:** +662-324-3190
Email: sale@sunrisegr.com **LINE** @sunrisegroup

Catalog Design by Sunnysideup Studio | www.sunnysideupstudio.net